SECTION 00 01 01
PROJECT TITLE PAGE
PROJECT MANUAL
FOR
American Iron & Metal

PROJECT NUMBER: 20014

American Iron & Metal

1533 McAdoo's Lane
Kingston , Ontario K0H 1S0

PREPARED BY:

Nicholas Caragianis Architect Inc.

ISSUE	YYYY-MM-DD	ISSUE DESCRIPTION
01	2023-02-14	For Tender

END OF SECTION 00 01 01

This page intentionally left blank

SECTION 00 01 03
PROJECT DIRECTORY

PART 1 GENERAL

1.01 SECTION INCLUDES

.1 Identification of project team members and their contact information.

1.02 OWNER

.1 Name: American Iron & Metal

.1 Address Line 1: 9100, Boul. Henri-Bourassa Est. Montreal, QC

1.03 CONSULTANTS:

.1 Consultant: Design Professional of Record. All correspondence from the Contractor regarding construction documents authored by sub-consultants will be through this party, unless alternate arrangements are mutually agreed upon at preconstruction meeting.

.1 Company Name: Nicholas Caragianis Architects Inc..

.1 Address: 137 Pamilla Street.
Ottawa, Ontario K1S 3K9

.2 Primary Contact:

.3 Telephone: (613) 237 - 6801 Ext. 238.

.4 Email: shickey@ncarchitect.ca - Project Lead

.2 Civil Engineering & Landscaping Consultant:

.1 Company Name: IBI Group.

.1 Address Line 1: Unit 110-650 Dalton Ave..
Kingston ON, K7M 8N7.

.2 Telephone: 613-531-4440.

.3 Email: [_____].

.3 Structural Engineering Consultant:

.1 Company Name: D+M Structural Engineering.

.1 Address Line 1: 110-333 Preston St. .
Ottawa, ON K1S 5N4

.2 Telephone: (613) 651-9490

.3 Email: ryan@dm-structural.ca

.4 Mechanical & Electrical Engineering Consultant:

.1 Company Name: DDDG Engineering Services.

.1 Address Line 1: 253 Hudson Point Rd. .
Elizabethtown, On K6V 7E3

.2 Telephone: (613) 498-2191.

.3 Email: dondegroot@dddg.ca

END OF SECTION 00 01 03

This page intentionally left blank

SECTION 00 01 10
TABLE OF CONTENTS *

NOTE: FOR MECHANICAL AND ELECTRICAL SPECIFICATIONS REFER TO MECHANICAL AND ELECTRICAL DRAWINGS
NOTE: FOR STRUCTURAL SPECIFICATIONS REFER TO STRUCTURAL DRAWINGS

Section ID	Section Name	Discipline Responsible for Section	No. of Pages
Division 00 - Procurement and Contracting Requirements			
00 01 01	Project Title Page	Arch. Supplied	1
00 01 03	Project Directory	Arch. Supplied	1
00 01 10	Table of Contents	Arch. Supplied	3
00 21 13	Instructions to Bidders	Arch. Supplied	11
00 31 00	Information Available to Bidders	Arch. Supplied	2
00 41 13	Stipulated Price Bid Form	Arch. Supplied	2
00 43 36	Bid Form Appendix 'A' - Subcontractors & Trade Prices	Owner Supplied	3
00 50 00	Form of Contract and Supplementary Forms	Arch. Supplied	1
00 73 02	Supplementary Conditions to the CCDC 2 - 2020	Arch. Supplied	11
Division 01 - General Requirements			
01 11 00	Summary of Work	Arch. Supplied	4
01 1 23	Owner-Supplied Products	Arch. Supplied	3
01 25 00	Substitution Procedures	Arch. Supplied	6
01 26 00	Contract Modification Procedures	Arch. Supplied	4
01 29 00	Payment Procedures	Arch. Supplied	2
01 31 19	Project Meetings	Arch. Supplied	3
01 32 13	Construction Progress Documentation	Arch. Supplied	4
01 33 00	Submittal Procedures	Arch. Supplied	5
01 35 43	Environmental Procedures	Arch. Supplied	3
01 40 00	Quality Requirements	Arch. Supplied	9
01 41 00	Regulatory Requirements	Arch. Supplied	4
01 45 16	Thermal Imaging*	Arch. Supplied	2
01 50 00	Temporary Facilities and Controls*	Arch. Supplied	8
01 57 19	Temporary Environmental Controls	Arch. Supplied	5

01 60 00	Product Requirements	Arch. Supplied	5
01 73 00	Closeout Requirements	Arch. Supplied	3
01 71 23	Site Engineering	Arch. Supplied	5
01 73 29	Cutting, Patching and Making Good	Arch. Supplied	2
01 74 19	Construction Waste Management and Disposal	Arch. Supplied	5
01 78 00	Closeout Submittals	Arch. Supplied	4
01 79 00	Demonstration and Training	Arch. Supplied	2
01 91 00	Commissioning	Arch. Supplied	2
Division 03 - Concrete			
03 35 10.00	Concrete Floor Finishing	Arch. Supplied	6
03 35 10.01	Concrete Floor Finishing Appendices (6 pages attached)	Arch. Supplied	1
Division 04 - Masonry			
04 20 00	Unit Masonry	Arch. Supplied	20
Division 05 - Metals			
05 50 00	Metal Fabrications	Arch. Supplied	7
05 51 00	Metal Stairs	Arch. Supplied	6
Division 06 - Wood, Plastics and Composites			
06 10 00	Rough Carpentry	Arch. Supplied	6
06 41 16	Plastic-Laminate-Clad Wood Casework	Arch. Supplied	9
Division 07 - Thermal and Moisture Protection			
07 14 16	Cold Fluid-Applied Waterproofing	Arch. Supplied	8
07 21 00	Board and Batt Insulation	Arch. Supplied	6
07 21 19	Spray-Applied Urethane Foam Insulation	Arch. Supplied	9
07 21 29	Non-Combustible Spray-Applied Insulation	Arch. Supplied	4
07 26 13	Building Envelope Sheet Vapour Retarder	Arch. Supplied	4
07 26 16	Under-Slab Sheet Vapour Retarder	Arch. Supplied	3
07 27 13	Non-Permeable Air/Moisture/Vapour Barrier	Arch. Supplied	7
07 27 16	Permeable Air/Moisture Barrier	Arch. Supplied	8

07 42 13	Insulated Metal Wall Panels - Standard Core *	Arch. Supplied	13
07 42 15	Insulated Metal Wall Panels - Mineral Wool Core	Arch. Supplied	12
07 42 43	Aluminum Composite Material Wall Panels	Arch. Supplied	9
07 52 16	SBS Modified Bituminous Roofing	Arch. Supplied	10
07 62 00	Sheet Metal Flashing and Trim	Arch. Supplied	9
07 72 33	Roof Hatches*	Arch. Supplied	6
07 84 01	Firestopping	Arch. Supplied	
07 92 00	Joint Sealants	Arch. Supplied	9
Division 08 - Openings			
08 11 13	Hollow Metal Doors and Frames	Arch. Supplied	9
08 33 23	Overhead Coiling Doors	Arch. Supplied	6
08 36 13	Sectional Metal Overhead Doors	Arch. Supplied	7
08 44 35	Protective Framed Glazing Assemblies	Arch. Supplied	5
08 51 13	Aluminum Windows	Arch. Supplied	8
08 53 13	Vinyl Windows	Arch. Supplied	4
08 71 10	Door Hardware	Arch. Supplied	5
08 71 11	Door Hardware Schedule (refer to Drawings)	Arch. Supplied	1
08 71 13	Automatic Swing Door Operators	Arch. Supplied	6
08 80 00	Glazing	Arch. Supplied	9
Division 09 - Finishes			
09 00 00	Master Finish Schedule (refer to Drawings) *	Arch. Supplied	1
09 21 16	Gypsum Board Assemblies	Arch. Supplied	14
09 22 16	Non-Structural Metal Stud Framing	Arch. Supplied	6
09 30 13	Ceramic Tiling	Arch. Supplied	8
09 65 00	Resilient Flooring	Arch. Supplied	4
09 91 00	Painting	Arch. Supplied	7
Division 10 - Specialities			
10 28 00	Toilet, Bath, and Laundry Accessories	Arch. Supplied	7
10 28 10.01	Restroom Emergency Call System	Arch. Supplied	4
10 28 10.02	Restroom Barrier Free Door Control	Arch. Supplied	4

10 28 10.03	Appendix A - Restroom Control Kit * (6 pages attached)	Arch. Supplied	1
Division 11 - Equipment			
11 13 00	Loading Dock Equipment*	Arch. Supplied	4
11 13 13	Loading Dock Bumpers	Arch. Supplied	1
Division 12 - Furnishings			
12 36 00	Countertops	Arch. Supplied	5
Division 32 - Exterior Improvements			
32 17 26	Tactile Warning Surfacing	Arch. Supplied	4

END OF SECTION 00 01 10

SECTION 00 21 13
INSTRUCTIONS TO BIDDERS

SUMMARY

1.0 GENERAL

1.01 RELATED DOCUMENTS

.1 Bid Invitation Letter: Duplicated information within these specifications and the Bid Invitation Letter, the instructions within the Invitation Lettera are to take precedence.

.2 Div 01, *General* and *Supplementary Conditions* of the *Contract*.

.3 Document 00 31 00 - Information Available to Bidders

.4 Document 00 41 13 - Stipulated Price Bid Form

.5 Document 00 50 00 - Form of Contract and Supplementary Forms

.6 Document 00 73 02 - Supplementary Conditions to CCDC 2-2020

1.02 DEFINITIONS

.1 Capitalized and italicised terms not otherwise defined in this *Section* or elsewhere in these *Instructions to Bidders* shall/will have the meanings ascribed to them in the Definitions to CCDC 2 - 2020 stipulated price contract, as amended by 00 73 02 - Supplementary Conditions to CCDC 2-2020

.2 Additional Information: has it's meaning set out in article 7.07 of these *Instructions to Bidders.*

.3 Bid or Bidding: means the act of submitting the *Bid Submission* documents in accordance with these *Instructions to Bidders,* as an offer under seal.

.4 Bid Contract: means the process contract formed between the *Owner* and each bidder that submits a compliant or substantially compliant *Bid Submission*.

.5 Bid Documents: has it's meaning set out in article 3.01 of these *Instructions to Bidders.*

.6 Bid Submission: has it's meaning set out in article 7.0 of these *Instructions to Bidders*

.7 Bid Price: Monetary Sum identified by the Bidder in the *Bid Form* as an offer to perform the *Work*.

.8 Consultant: means the *Architect of Record* identified in Section 00 01 03 - Project Directory of the Specifications.

.9 Contract Documents: Defined in the CCDC 2 - 2020*Definitions* and *General Conditions*. To include the *Invitation to Bid Letter*, *Instructions to Bidders*, *Supplements to Bid Forms* and *Appendicies* identified.

.10 Irrevocability Period: has the meaning set out in article 8.01 of these *Instructions to Bidders.*

.11 Local Standard Time: means the time recorded by the *Owner's* computer server time, at the location identified in article 2.02 of these *Instructions to Bidders.*

.12 Place of the Work: means the location identified in article 2.01 of these *Instructions to Bidders.*

.13 Project: means the total construction and related services and *Work* required by the *Bid Documents.*

.14 Supplement to Bids: Bid Form Appendices and other required supplementary documents as set out in article 7.03 in these *Instructions to Bidders*

.15 Bid Schedule: A summary schedule of the work as set out in article 2.04 of these *Instructions to Bidders.*

2.0 INVITATION

2.01 BID CALL

.1 American Iron & Metal, "Owner" is soliciting *Bid Submissions* from qualified general *Contractors* to complete the *Project* located at:

1533 McAdoo's Lane,
Kingston, OntarioK0H 1S0

2.02 BID SUBMISSION DEADLINE

.1 All required *Bid Documents* to be received by email transmission, at the offices of the *Owner* located at 9100, Boul. Henri-Bourassa Est. Montreal, QC and addressed to the *Owner*'s representative, Mahmoud Salman at msalman@aim-global.com

.2 *Bids* shall be signed and under seal, executed, and dated will be received electronically by email transmission on the date specified in the Bid Invitation Letter.

.3 *Supplements to Bid* shall be submitted at the same time, and in the same manner as Bids

.4 Offers submitted after the above noted time will be rejected.

.5 Offers will be opened privately immediately after the time for receipt of bids.

.6 Amendments to the submitted offer will be permitted if received in writing prior to bid closing and if endorsed by the same party or parties who signed and sealed the offer.

2.03 INTENT & BID CONTRACT

.1 The intent of this *Bid* request is to obtain an offer to perform work to complete the construction of a two story building and associated landscaping, structural, mechanical, electrical and and civil works located at 1533 McAdoo's Lane*, Kingston, ON* for a Stipulated Price contract, in accordance with the *Bid Documents.*

.2 Work of this proposed *Contract* comprises building construction, site development, and selective demolition, including general construction *Work.*

.3 The extent of the *Work* is summarized in the *Bid Documents.*

.4 Each *Bidder* acknowledges that by submitting a compliant *Bid* , it will be accepted as an offer by the *Owner* to enter into a *Bid Contract* for the evaluation of *Bids* and the award of the *Contract*, if an award is made. Each bidder acknowledges that the terms of the *Bid Contract* are represented by the *Bid Documents.*

2.04 CONTRACT TIME

.1 Bidders shall submit a *Bid Schedule* outlining the *Contract Time* and key milestone dates with their *Bid Submissions*.

.2 The *Bid Schedule* shall be formatted in Gantt format indicating at least milestones for mobilization, foundations, structure, building envelope, roofing, *Owner Possession*, Ready-For-Takeover, and *Total Performance of the Work.*

.3 The successful bidder will be required to complete the *Project* in accordance with the following milestone dates:

.1 Start *Work* ; on the date specified in the Bid Invitation Letter.

.2 *Ready-For-Takeover* as per the detailed *Bid Schedule* submitted by the Bidder.

.4 The bidder, in submitting an offer, accepts the *Contract Time* period stated for performing the *Work*.

3.0 BID DOCUMENTS AND CONTRACT DOCUMENTS

3.01 BID DOCUMENTS IDENTIFICATION

.1 The *Bid Documents* are identified as the *Project* located at:

American Iron & Metal

Kingston, Ontario, K0H 1S0

.2 The following are the *Bid Documents*:

.1 Bid Invitation Letter

.2 Instructions to Bidders

.3 Bid Form

.4 Bid Form Appendicies and other *Supplement to Bids* documents identified in article 7.03 of these *Instructions to Bidders*

.5 CCDC 2 - 2020 stipulated price contract comprised of the Agreement between Owner, and Contractor, definitions and General Conditions of the Stipulated Price Contract.

.6 00 73 02 - Supplementary Conditions to CCDC 2-2020

.7 Specifications

.8 Drawings

.9 Addenda issued during the bidding period

.10 Post-bid addenda

3.02 AVAILABILITY

.1 *Bid Documents* are made available only for the purpose of the bid process described in these *Instructions to Bidders*. Their use does not grant a license for any other purposes.

.2 *Bid Documents* will be made available to bidders electronically via the Consultant's cloud based file transfer system, save and except the CCDC 2 - 2020 stipulated price contract.

3.03 INTERPRETATION OF BID DOCUMENTS

.1 The intent of the *Bid Documents* is to include the labour, products, services necessary for the performance of the *Work* by the *Contractor* in accordance with these documents. It is not intended, however, that the *Contractor* shall supply products or perform work not consistent with, not covered by, or not properly inferable from the *Bid Documents*.

.2 Nothing contained in the *Bid Documents* shall create any contractual relationship between:

.1 The *Owner* and a *Subcontractor*, a *Supplier*, or their agent, employee, or other person performing any of the Work

.2 The *Consultant* and the *Contractor*, a *Subcontractor*, a *Supplier*, or their agent, employee, or other person performing any of the *Work.*

.3 The *Bid Documents* are complementary, and what is required by any one document shall be as binding as if required by all.

.4 The sequence and numbering of the drawings and details and the organization of the specifications into Divisions and Sections are established for the convenient ordering of information. It must not be assumed that such ordering of information is intended to define or limit the scope or extent of the *Work* of any particular *Subcontractor* or *Supplier.* The drawings and specifications, as a whole, must be fully read, in detail, to determine the extent of any portion of the *Work*. It is the responsibility of the *Contractor* to coordinate *Subcontractor* and *Supplier* prices such that the stipulated *Bid Price* is all-inclusive, as specified herein.

.5 Words and abbreviations which have well known technical or trade meanings are used in the *Bid Documents* in accordance with such recognized meanings.

.6 References in the *Bid Documents* to the singular shall be considered to include the plural as the context requires.

.7 If there is a conflict within *Contract Documents*, the order of priority of documents shall be in accordance with Article 1.1.7 of GC 1.1 of CCDC 2 - 2020

3.04 EXAMINATION

.1 Upon receipt of *Bid Documents* verify that documents are complete. Notify the *Consultant* should the documents be incomplete.

.2 Immediately notify the *Consultant* upon finding discrepancies or omissions in the *Bid Documents.*

3.05 INQUIRIES/ADDENDA

.1 Inquiries shall be made only by *Contractors* bidding this project. *Subcontractor* shall make contact only through one of these *Contractors*.

Direct all questions and enquiries to the *Owner's* Representative:

Mahmoud Salman
Phone:1-514-235-5340
E-mail: msalman@aim-global.com

.2 *Addenda* may be issued during the bidding period. All *Addenda* become part of the *Bid Documents.* Their receipt shall/will be acknowledged in the space provided on the *Bid Form*. Include resultant costs in the *Bid Price.*

.3 Verbal answers are not binding on any party.

.4 Clarifications requested by *Bidders* must be in writing not less than three (3) days or seventy two (72) hours before date and time set for receipt of bids. The reply will be in the form of an *Addendum*, a copy of which will be forwarded by email to known recipients and will be made available to bidders electronically via a cloud based file transfer system. .

.5 The last *Addendum* will be issued no later than two (2) days before date set for receipt of bids.

.6 Any questions received within the seventy two (72) hours prior to bid closing will be as per article 7.09 Post Bid Addenda.

3.06 SUBSTITUTIONS

.1 Where the *Bid Documents* stipulate a particular product, substitutions will be considered up to three (3) days before receipt of bids.

.2 When a request to substitute a product is made, the *Consultant* may approve the substitution and will issue an *Addendum* to known *Bidders.*

.3 The submission shall provide sufficient information to determine acceptability of such products.

.4 Provide complete information on required revisions to other work to accommodate each proposed substitution.

.5 Provide products as specified unless substitutions are submitted in this manner and accepted.

.6 See Div 01, *General* and *Supplementary Conditions* of the *Contract* for additional requirements.

4.0 SITE ASSESSMENT

4.01 SITE EXAMINATION

.1 Examine the project site before submitting a *Bid.*

.2 Before submitting a *Bid*, carefully examine the *Bid Documents* to establish the extent of the *Work* and visit and examine the location of the *Project* and become fully informed of all the existing conditions, limitations and difficulties which may arise. Include in the *Bid* the cost of all labour, materials, equipment and services required to complete the *Work*. Failure by the *Contractor* to become fully acquainted with existing conditions under which the *Work* is to be performed will not be justification for additional compensation.

.3 Any soils investigation, environmental, geotechnical or other reports prepared or obtained with respect to the *Place of the Work* and/or the *Work* (collectively the 'Reports') are included under separate cover from the *Consultant.* Where the *Work* involved existing facilities, plant or equipment, any reports, data or as-built drawings conerning such facilities, plant or equipment (collectively the 'Data') are available from the *Consultant.* The *Reports* should not be considered as representation of the site conditions of the entire *Place of the Work* or the condition of the *Work*, and the *Reports* and *Data* are provided for general information and guidance purposes only. Neither the *Owner,* not the *Consultant*, guarantees the accuracy or completeness of the *Reports* or the *Data*, nor does either assume any responsibility for any interpretations or conclusions that bidders may make or draw from the *Reports* or *Data*.

.4 Bidders shall/will not inform the public about the work contemplated and described in the *Bid Documents.*

5.0 QUALIFICATIONS

5.01 EVIDENCE OF QUALIFICATIONS

.1 To demonstrate qualification for performing the *Work* of this *Contract*, bidders may be requested to submit written evidence of financial position, license to perform work in the Province.

.2 To demonstrate qualification for performing the *Work* of this *Contract*, bidders shall submit, as a *Supplement to Bid*, resumes of the project manager and superintendents proposed for the *Project*, demonstrating relevant skill, knowledge and experience , and including a chronology of work experience and a list of projects of similar size and complexity to the *Project.*

5.02 SUBCONTRACTORS/SUPPLIERS/OTHERS

.1 *Owner* reserves the right to reject a proposed *Subcontractor* or *Supplier* for reasonable cause.

.2 Refer to CCDC 2 - 2020 Article G3.7

6.0 BID SUBMISSION

6.01 BID DEPOSITORY

.1 The rules and regulations of this bid deposit system, in force on the day of bid submission shall apply.

.2 If required use latest edition of CCDC approved bond forms.

6.02 SUBMISSION PROCEDURE

.1 *Bidders* shall be solely responsible for the delivery of their *Bids* in the manner and time prescribed in article 2.02 Bid Submission.

.2 Improperly completed information, irregularities in consent of surety, may be cause not to open the *Bid Form* and declare the *Bid* invalid or informal.

6.03 BID INELIGIBILITY

.1 *Bids* that are unsigned, improperly signed or sealed, conditional, illegible, obscure, contain arithmetical errors, erasures, alterations, or irregularities of any kind, may at the discretion of the *Owner,* be declared unacceptable.

.2 Bid Forms that are unsigned, improperly signed, illegible or incomplete, or that contain modifications, erasures, changes, additions, conditions, qualifications, or un-initialed amendments, may results in the Bid Submission being declared non-compliant.

.3 *Bid Forms,Supplements to Bids*, and enclosures that are improperly prepared may, at the discretion of Owner, be declared unacceptable.

.4 Failure to provide security deposit, bonding or insurance requirements may, at the discretion of *Owner*, invalidate the bid.

.5 Failure to provide *Supplements to Bids* may, at the discretion of the Owner, invalidate the bid.

.6 Should the *Owner* receive no compliant *Bid Submissions*, the *Owner*, in its discretion, may re-bid all of any part of the *Project* or may negotiate a contract for the whole or any part of the Project with a bidder who submitted a non-compliant *Bid Submission.*

.7 The *Owner* shall/ will not be responsible for, and bidders shall/will bear all costs and expenses incurred by them, relating to any aspect of their participation or intended participation in this bid process, including all costs and expenses related to the bidder's involvement in due diligence, investigation and information gathering processes, attendance at any site visits or meetings, and the preparation and submission of the *Bid*.

7.0 BID SUBMISSION ENCLOSURES AND REQUIREMENTS

7.01 CONSENT OF SURETY

.1 Submit with the Bid: a 'Pre-Qualification Letter' and a 'Consent of Surety' in conformance with requirements set by Surety Canada guidelines, from a licensed member of the Surety Association of Canada acceptable to the Owner, stating that the assurance company is willing to supply the Performance, Labour and MAterial Payment Bond required.

7.02 INSURANCE

.1 Provide an executed "Undertaking of Insurance" on a standard form provided by the insurance company stating their intention to provide insurance to the bidder in accordance with the insurance requirements.

.2 The insurance requirements for this *Contract* shall be in accordance with CCDC 41 – CCDC Insurance Requirements which is included with CCDC 2 - 2020

7.03 BID FORM REQUIREMENTS

.1 Complete all requested information in the *Bid Form* and *Supplements to Bids.* Use only the *Bid Form* and appendicies issued as part of the *Bid Documents* for the *Project*. If the *Bid Form* or apendicies are amended by addendum, use only the amended document.

.1 Failure to comply with this paragraph may result in the *Bid Submission* being declared non-compliant.

.2 Information provided by bidders on the *Bid Form* or apendicies may be amended prior to the *Submission Deadline* by submitting a written amendement or by making corrections on the document, provided bidder corrections are initialled by an authorized representative of the bidder.

.2 All Bidders will be requested to submit completed *Supplements To Bid* forms with their *Bid Submission.*

.3 Submit the following *Supplements to Bid* in the time prescribed in article 2.02 following the *Bid Submission*:

.1 Document 00 43 36 - Supplement to Bid: Proposed Subcontractors Form - Include costing information for winter works if any in the anticipated *Contract Time.*

.1 Include the names of all *Subcontractors* and the portions of the *Work* they will perform. Include costing information for winter works if any in the anticipated *Bid Schedule.*

.2 *Bid Schedule* in the form prescribed in article 2.04 of these *Instructions to Bidders.*

.3 Bidders Qualification documents: Bidders to submit resumes of the project manager and superintendents proposed for the Project, demonstrating relevant skill, knowledge and experience, and including a chronology of work experience and a list of projects of similar size and complexity to the *Project.*

.4 Consent of Surety: As identified in article 7.01 of these *Instructions to Bidders.*

7.04 SALES AND USE TAXES

.1 Include in the Bid Price for cost of all applicable Federal, Provincial and Municipal taxes, except Federal Goods and Services Tax (GST). Include an estimate of the GST in the space provided on the Bid Form.

7.05 FEES FOR CHANGES IN THE WORK

.1 Include in the *Bid Form,* the overhead and profit fees on own *Work* and *Work* by *Subcontractors*, applicable for *Changes in the Work*, whether additions to or deductions from the *Work* on which the *Bid Price* is based.

7.06 BID FORM SIGNATURE

.1 The *Bid Form* shall be signed by the bidder, as follows:

.1 Sole Proprietorship: Signature of sole proprietor in the presence of a witness who will also sign. Insert the words "Sole Proprietor" under the signature. Affix seal.

.2 Partnership: Signature of all partners in the presence of a witness who will also sign. Insert the word "Partner" under each signature. Affix seal to each signature.

.3 Corporation: Signature of a duly authorized signing officer(s) in their normal signatures. Insert the officer's capacity in which the signing officer acts, under each signature. Affix the corporate seal. If the bid is signed by officials other than the president and secretary of the company, or the president/secretary/treasurer of the company, a copy of the by-law resolution of their board of directors authorizing them to do so, must also be submitted with the *Bid Form.*

.4 Joint Venture: Each party of the joint venture shall execute the Bid Form under their respective seals in a manner appropriate to such party as described above, similar to the requirements of a Partnership.

7.07 ADDITIONAL BID INFORMATION

.1 Additional Bid Information: The *Owner* and/or *Consultant* may contact any one or more bidders to request additional information ("Additional Information") without any obligation to contact any other bidder or bidders. Requests for *Additional Information* shall/will not be construed as award of the *Contrac*t, acceptance of a *Bid*, or the rejection of a *Bid*.

.2 Bidders shall/will respond promptly to all requests for *Additional Information*. Failure to do so may result in the *Bid* being rejected.

.3 Information, prices, rates and documents submitted in response to a request for *Additional Information* shall/will form part of a bidder's *Bid*.

7.08 SELECTION AND AWARD OF ALTERNATIVES

.1 The *Bid Price* offered on the *Bid Form* will be considered the bidder's 'Base Bid' the *Owner* reserves the right, but has no obligation, to adjust a bidder's *Base Bid* by the amount of any separate price, itemized price, alternate price or bidder's alternatives which the *Owner*, in its discretion, decides to accept.

.2 *Bids* will be evaluated on the total of the base *Bid Price* and the *Supplement to Bids.* After determination of the successful bidder, consideration will be given to which *Alternatives* will be included in the *Work*.

7.09 POST-BID ADDENDA

.1 The *Consultant* may, after the *Submission Deadline*, issue instructions, clarifications and/or amendments to the *Bid Documents* by issuing one or more post-bid addenda to those bidders who submitted a *Bid Submissio*n before the *Submission Deadline*. A bidder's receipt of a post-bid addendum shall/will not be construed to be determinative of whether its *Bid Submission* was or was not received before the *Submission Deadline* or whether its *Bid Submission* is or is not compliant.

.2 A post-bid addendum shall/will specify what, if any, prices, rates information or documents are to be provided by the bidders, and the method, place and time for the delivery of the same. Post-bid addenda shall/will become part of the *Bid Documents* and any prices, rates, information or documents submitted in response shall/will form part of a bidder's *Bid*. A bidder's failure to respond to a post-bid addendum will result in its *Bid* being rejected.

7.10 PERMITS AND FEES

.1 The *Owner* will obtain the *Building Permit*. The cost of the *Building Permit* and *Development Charges*, will be paid by the *Owner*.

.2 The *Contractor* shall and pay for all other permits, licences, or certificates necessary for the performance and completion of the *Work*.

8.0 OFFER ACCEPTANCE/REJECTION

8.01 DURATION OF OFFER

.1 Bids shall remain open to acceptance and shall be irrevocable for a period of Thirty (30) days after the bid closing date.

8.02 ACCEPTANCE OF OFFER

.1 *Owner* reserves the right to award the *Contract* to the bidder which submitted the *Bid* that, in the *Owner*'s sole discretion, provides the best value to the *Owner* based on the criteria described in the *Bid Documents* including, but not limited to, a bidder's:

- .1 *Base Bid*
- .2 *Base Bid* as adjusted by the *Owner* pursuant to the *Bid Documents*
- .3 Proposed Subcontractors and Suppliers
- .4 Prices and rates offered, and other information submitted in the *Bid Form* and *Supplements to Bids*
- .5 Information, documents, prices, and rates submitted in response to a request for *Additional Information*
- .6 Proposed construction team, including the proposed site superintendents
- .7 Proposed *Bid Schedule*
- .8 Record for quality of construction
- .9 Perceived financial strength
- .10 Availability, capacity and stability
- .11 Past experience
- .12 Propensity for litigation

.2 After acceptance by *Owner*, the *Consultant* on behalf of *Owner*, will issue to the successful bidder, a written *Bid Acceptance.*

.3 After a *Bid* has been accepted, the unsuccessful *Bids* will be returned to the respective bidders with the submitted bid securities and other requested enclosures.

.4 The *Owner* may, in its sole discretion, reject the lowest or any *Bid* or part of any *Bid*, reject all *Bids*, or cancel this bid process in whole or in part. The *Owner* is under no oblication to award the *Contract* where only one *Bid Submission* is received before the *Submission Deadline* and, in such case, may reject the *Bid* even if the *Bid Submission* is compliant.

8.03 DESIGNATED SUBSTANCES/ HAZARDOUS MATERIALS

.1 For work in an existing building, the *Contractor* shall not sign a contract or commence work on site until in receipt of a designated substances/ hazardous materials audit report with respect to the existing building.

.2 If the report is not provided by the *Owner,* the *Contractor* will be responsible for the work and cost of obtaining such a report before commencement of work on site.

8.04 STAFFING

.1 Prior to construction, submit the names and curriculum vitae of the Superintendent and Project Manager to be assigned to the *Consultant and Owner.*

.2 The *Owner* reserves the right to reject a proposed Superintendent or Project Manager if that person's qualifications and/or experience are deemed to be insufficient for the proper discharge of his/her duties.

8.05 CONTRACT DOCUMENTS ISSUED FOR CONSTRUCTION

.1 *Contractor* to only use *Drawings* and documents issued “For Construction” for all aspects of *Construction* of the *Project.*

.2 The *Contractor* is required, at his cost, to supply all his *Subcontractors*, *Suppliers* etc. with sufficient number and up to date drawings, change orders, contemplated change orders, Site Instructions, - as required to allow them to complete the project.

9.0 APPLICABLE LAW

9.01 DISPUTES

.1 In the event of a dispute arising in connection with this bid process inlcuding, without limitation, a dispute concerning the existence of the *Bid Contract* or a breach of the *Bid Contract*, or a dispute as to whether the *Bid Submission* of any bidder was submitted on time of whether a *Bid Submission* is compliant, the *Owner*, in its unqualified subjective discretion, may refer the dispute to confidential binding arbitration before a single arbitrator with knowledge of the procurement/ bidding law and practice at Kingston, Ontario, pursuant to the Arbitration Act, 1992 (Ontario) as amended. In the event that the *Owner* refers the dispute to arbitration, the bidder agrees that it is bound to arbitrate such dispute with the *Owner*. Unless the *Owner* shall/will refer such dispute to arbitration, there shall/ will be no arbitration of such dispute.

.2 In the event the *Owner* refers a dispute to arbitration, the *Owner* may give notice of the dispute to one or more of the other bidders who submitted *Bid Submissions*, whether or not they may be compliant, each of whom shall/will be a part to and shall/will be entitled to participate in the arbitration, and each of whom shall/will be bound by the arbitrator's award, whether or not they participated in the arbitration.

.3 In the event the *Owner* refers a dispute to arbitration, the parties to the arbitration shall/will exchange brief statements of their respective positions on the dispute, together with the relevant documents, and submit to an arbitration hearing which shall/will last no longer than two (2) days, subject to the discretion of the arbitrator to increase such time. The parties further agree that there shall/will be no appeal from the arbitrator's award.

.4 This article is not intended for form part of any *Bid Contract* that may come into being between a bidder and any prospective *Subcontractor* or *Supplier* of that bidder.

9.02 JURISDICTION

.1 The bid process and any *Bid Contract* which may arise shall/will be construed in accordance with an governed by the laws of the province of the *Work* and, each of the bidder's attorney to be exclusive jurisdiction of the courts of the province of the *Work.*

END OF SECTION 00 21 13

This page intentionally left blank

SECTION 00 31 00
INFORMATION AVAILABLE TO BIDDERS

1.01 REPORTS

.1 Copies of reports environmental assessment and subsurface investigations made at the building site are appended to this Section, title as:

.1 Geotechnical Investigation Report;
- .1 Prepared by: GHD Group
- .2 Dated: May 28, 2020
- .3 Reference: 11212206

.2 Hydrogeological Assessment: Onsite Sewage System
- .1 Prepared by: GHD Group
- .2 Dated: June 2020
- .3 Reference: 11212206

.3 Septic Design Report
- .1 Prepared by GHD Group
- .2 Dated: April 05, 2022
- .3 Reference: 12575911
- .4

.4 Noise Impact Assessment for Auto Recycling Facility
- .1 Prepared By: Soft db
- .2 Dated: July 2020
- .3 Reference: 20-03-09-CY

.5 Tree Inventory and Preservation Plan
- .1 Prepared By: Arborsphere
- .2 Dated: June 8th, 2022
- .3 Reference: 20-004-R2

.6 Stormwater Management Brief:
- .1 Prepared By: IBI Group
- .2 Dated: December 9th, 2022
- .3 Reference: 124600

.2 Bidders are required to submit their *Bids* upon the express condition that they shall have satisfied themselves before bidding, by personal examination of the location of the proposed works, or by such other means as they may prefer, as to the actual conditions and requirements of the *Work*.

.3 The information provided and recommendations made were prepared primarily for the use of the *Consultant*. The recommendations given shall not be construed as a requirement of the *Contract* unless also contained in the *Contract Documents.*

.4 These reports does not form part of the *Bid Documents.*

.5 These reports, by their nature, cannot reveal all conditions that exist or can occur on the site. Should actual conditions, in the opinion of the *Consultant*, be subsequently found to vary substantially from the report, changes in the design and construction of foundations will be made, with resulting credits or expenditures to the *Contract Price* accruing to the Owner.

.6 These reports are furnished by the *Owner* to the *Contractor* and are included in these specifications only for the ease of reference. The *Owner* and the *Consultant* assume no responsibility for the accuracy or completeness of the information contained in the report.

.7 Direct all questions pertaining to these reports to the reports' authors.

END OF SECTION 00 31 00

SECTION 00 41 13
STIPULATED PRICE BID FORM

SUBMITTED BY_____(name of company)

OF _____ (City and Province) **DATED: _____**

Bid To: American Iron & Metal
msalman@aim-global.com
Attention: Mahmoud Salman

1.01 BID

.1 I/we, having examined the site and conditions prevailing, agree, for the following Stipulated Price to supply all necessary labour, materials, plant, equipment and services for the execution and completion of the *Work* in accordance with the *Contract Documents*, including all addenda thereto which are acknowledged hereinafter, for the construction of:

2 storey building with all associated electrical and mechanical connections and site works
1533 McAdoo's Lane, Kingston, OntarioK0H 1S0

for the all-inclusive sum, not including GST/HST of:
_____$ Dollars in lawful Money Canada

1.02 COMPLETION DATE

.1 I/we agree to achieve *Ready-For-Takeover* within the time stated in the *Bid Documents.*

1.03 CONSENT OF SURETY

.1 I/ we enclose herewith a letter from a Surety Company, certifying that I/we can obtain the Labour and Material Payment Bonds required by the *Bid Documents*, if successful in obtaining the *Contract.*

1.04 ADDENDA

.1 I/ we hereby acknowledge receipt of the following addenda issued to me/ us during the bidding period:

No. _____ Dated: _____

No. _____ Dated: _____

No. _____ Dated: _____

No. _____ Dated: _____

No. _____ Dated: _____

1.05 SUPPLEMENTS TO BID

.1 The supplementary information called for in the *Bid Documents* to be submitted with the *Bid* is provided on the Supplements submitted herewith and forms an integral part of this *Bid.*

.2 I/we agree that, if requested, I/we will provide within twenty four (24) hours of *BidClosing*, the additional supplementary bid information called for in the *Bid Documents*. I/we further agree that this information will form an integral part of this *Bid.*

1.06 DURATION OF OFFER

.1 My/our *Bid* shall remain open for acceptance and shall be irrevocable for a period of thirty (30) days after the *Bid Closing* date.

_____ (Date)

_____(Signature of Legal Signing Authority)

1.07 EXECUTION OF THE CONTRACT

.1 I/we are in a position to commence the *Work* immediately upon execution of the *Contract Documents* or upon beign in receive of a formal instruction from the *Consultant* to proceed.

.2 If I/we are notified of the acceptance of my/our bid, I/ we will, within fourteen (14) days, execute a Contract Agreement on the Canadian Standard Construction Document 2, Stipulated Price Contract, 2020 Edition, duly completed and modified to conform to the *Bid Documents* and this *Bid Form*.

1.08 CONTRACTOR'S SIGNATURE

CONTRACTOR'S SIGNATURE)
or, if the bid is submitted)
by an incorporated company)
its seal attested by the hands)
of its proper officers)
) _____

Dated at, _____, in the Province of _____,

Canada this _____ day of _____, 20___ in the

presence of:

_____
(Witness Signature)

_____
(Name of Witness)

END OF SECTION 00 41 13

This page intentionally left blank

SECTION 00 43 36
BID FORM APPENDIX 'A' - SUBCONTRACTORS & TRADE PRICES

NAME OF BIDDER: _____

PROJECT: **American Iron & Metal**
1533 McAdoo's Lane,
Kingston, OntarioK0H 1S0

LIST OF SUBCONTRACTORS AND SUBTRADES PRICES

The undersigned proposes to employ the following *Subcontractors* and/or *Suppliers* to perform or supply the items of *Work* listed below. The undersigned confirms that all *Subcontractors* and/or *Suppliers* listed have been investigated to confirm their reliability and competency to carry out or supply such *Work* in accordance with the *Contract Documents*. The undersigned further acknowledges that where “own forces” has been inserted for an item of the *Work*, it is the undersigned’s intention to use “own forces” for that purpose.

No substitution for a *Subcontractor*, *Supplier* or “own forces” will be permitted except as provided in the *Contract*.

COST BREAKDOWN

DATE:
LOCATION:
MODEL:

CONTINGENCY

	BUILDING		SITE WORKS	
301	GENERAL CONDITIONS		GENERAL CONDITIONS	
302	DEMOLITION		DEMOLITION	
303	EXCAVATION/BACKKFILL/COMPACTION		CLEARING & GRUBBING	
304	PILES & CAISSONS		CUT & FILL	
305	FOOTINGS & FOUNDATION WALL		LANDSCAPING	
306	BUILDING SLAB		IRRIGATION SYSTEM	
307	WOOD STRUCTURE (JOISTS)		FENCING	
308	ROUGH CARPENTRY		RETAINING WALLS	
309	FINISH CARPENTRY		GRANULAR YARD AND PREPARATION	
310	STRUCTURAL STEEL		CONCRETE BASES	
311	METAL DECK		ELECTRICAL CONDUIT - CONCRETE BASES	
312	MISCELLANEOUS METALS & BOLLARDS		CONCRETE CURBS	
313	MASONRY		CONCRETE BLAB/BCR	
314	METAL SIDING		CONCRETE SIDEWALKS	
315	ROOFING & METAL FLASHING		ASPHALT	
316	DOORS/FRAMES/HARDWARE		ASPHALT - GRANULAR BASE	
317	ALUMINUM WINDOWS & STOREFRONT		ELECTRICAL - SECONDARY SERVICE	
318	GLAZING		SITE LIGHTING	
319	GARRAGE DOOR		WATER SERVICE	
320	DRYWALL/METAL STUD/INSULATION		STORM SERVICE	
321	ACOUSTIC CEILING TILE & GRID		OIL/GRIT SEPARATOR	
322	STUCCO		SEPTIC SYSTEM	
323	ALUMINUM SOFFIT		WELL SYSTEM	
324	FLOOR TILE		CURB CUTS	
325	WALL TILE		RESTORATION	
326	PAINTING		RELOCATION	
327	FRP PANELS		SPECIAL CONDITIONS - SITE	
328	METAL STORAGE SHELVING		WINTER CONDITIONS	
329	TOILET PARTITIONS & ACCESSORIES		SIGNALIZATION	
330	FOOT GRILLES		OTHER	
331	PLUMBING - ROUGH-IN		**SITE WORK TOTALS**	0.00
332	PLUMBING - FINISH			
333	HVAC ROUGH-IN (EQUIPMENT SUPPLY)		OFF-SITE WORK	
334	HVAC DISTRIBUTION & FINISH		HYDRO DEVELOPMENT CHARGES	
335	ELECTRICAL ROUGH-IN		HYDRO PRIMARY SERVICE	
336	ELECTRICAL FINISH		HYDRO TRANSFORMER	
337	WINTER CONDITIONS		OFF SITE SERVICE CONNECTIONS	
338	HOT WATER TANK		SANITARY SERVICE - STREET CONNECTION	
339	SPRINKLER SYSTEM		WATER SERVICE - STREET CONNECTION	
340	TEMPORARY ELECTRICAL SERVICE		FIRE HYDRANT	
341	TEMPORARY UTILITY/SERVICE PROTECTION		STORM SERVICE - STREET CONNECTION	
342	TEMPORARY DUST PARTITION		OFF-SITE WORK - OTHER	
343	DEFICIENCY HOLDBACK			
344	WATER TREATMENT/WATER SOFTENER		**OFF-SITE WORK TOTALS**	0.00
345	FINAL CLEANING			
399	OTHER:			
	OTHER:			
	OTHER:			
	OTHER:			
	OTHER:			
	OTHER:			
	BUILDING TOTALS	0.00	**SITE WORK TOTAL:**	0.00

General accounts: **DESIGN (ARCHITECTURAL & INGINEERING)**

Worksheet Revised:
August 02, 2006

Price Schedule #AIMP-250722-01.xlsx

DATE _____

NAME OF BIDDER (company) _____

AUTHORIZED SIGNATURE _____
I have the authority to bind the bidder

Name: _____

Title: _____

END OF SECTION 00 43 36

This page intentionally left blank

SECTION 00 50 00
FORM OF CONTRACT AND SUPPLEMENTARY FORMS

1.01 FORM OF CONTRACT

.1 The *Form of Contract*, including the *Agreement, Definitions*, and *General Conditions* is the *Standard Construction Document*, CCDC 2 - 2020 - Stipulated Price Contract.

.1 The successful bidder shall be required to prepare the contract documents.

.2 The amendments and *Definitions* forming part of CCDC 2 - 2020 in Section 00 73 02 - Supplementary Conditions to CCDC 2-2020 are hereby made a part of these *Documents* to the same extent as if bound herein.

.3 The General Conditions of CCDC 2 - 2020 , Articles GC 1.1 to GC 13.1, inclusive and the 00 73 02 - Supplementary Conditions to CCDC 2-2020 shall govern the work of the *Contract.*

.4 The insurance requirements for the Contract shall be in accordance with Article 7.02 'Insurance Requirements' in Section 00 21 13 - Instructions to Bidders

1.02 DISPUTE RESOLUTION

.1 Mediation and arbitration of disputes between the *Contractor* and the *Owner* shall be conducted in accordance with the *Standard Construction Document*, CCDC 40-2018 - Rules for Mediation and Arbitration of Construction Industry Disputes.

1.03 BONDS - AS REQUIRED BY BID INVITATION LETTER

.1 The form of the Bonds that the successful Bidder will be required to submit after the award of Contract are:

.1 SAC Performance Bond - 2021 Version

.2 SAC Labour & Material Payment Bond - 2021 Version

1.04 STATUTORY DECLARATIONS

.1 The *Statutory Declarations* that the *Contractor* will be required to submit with all progress payment billing submissions during the duration of the *Work*, except the first submission, are:

.1 CCDC 9A-2018 - Statutory Declaration of Progress Payment Distribution by Contractor.

.2 CCDC 9B-2018 - Statutory Declaration of Progress Payment Distribution by Subcontractor.

1.05 CCDC DOCUMENT AVAILABILITY

.1 The SAC Documents referred to herein were prepared by the Surety Association of Canada (SAC) and can be obtained from:

Phone: (905) 677 -1353
Email: *Surety@suretycanada.com*
Website: https://www.suretycanada.com/

.2 The CCDC Documents referred to herein were prepared by The Canadian Construction Documents Committee and can be obtained from:

Construction Specifications Canada
Phone: (416) 777-2198
E-mail: *www.csc-dcc.ca.*
Website: https://csc-dcc.ca/

END OF SECTION 00 50 00

SECTION 00 73 02
SUPPLEMENTARY CONDITIONS TO CCDC 2-2020

GENERAL

.1 These Supplementary Conditions shall apply to the *Work* of this *Project.*

.2 They shall be read in conjunction with the General Conditions of the Stipulated Price Contract CCDC 2 - 2020

AMENDMENTS TO THE AGREEMENT

ARTICLE A-3 CONTRACT DOCUMENTS

.1 Add:

.1 Supplements to Agreement and Contract

.2 Supplementary Conditions, Section 00 73 02 - Supplementary Conditions to CCDC 2-2020

.3 The Specification listed in Section 00 01 10 - Table of Contents *

.4 The *Drawings* listed on the *Consultant's* Cover Drawing

.5 Addenda issued during the bidding period

ARTICLE A-5 PAYMENT

.2 Amend 5.1.1 of Article A-5 add the following words to the end:

"or, where there is no Payment Certifier, jointly by the *Owner* and the *Contractor.*

ARTICLE A-6 RECEIPT OF AND ADDRESSES FOR NOTICES IN WRITING

.3 Delete paragraph 6.5 of Article A-6 in its entirety and replace it with the following:

“6.5 Contact information for a party may be changed by Notice in Writing to the other party setting out the new contact information in accordance with this Article.

NEW ARTICLE A-9 EXECUTION OF AGREEMENT

.4 Add new Article:

"ARTICLE A-9 EXECUTION

9.1 This agreement shall be executed in triplicate by both parties."

AMENDMENTS TO DEFINITIONS

DEFINITIONS 4 AND 12:

.5 *Add to Definition 4*: "....The Consultant is Nicholas Caragianis Architect Inc. Wherever in the specifications or on the drawings, the word "Engineer", "Architect", or "Consultant" is used, it shall mean the Consultant as defined above."

.6 *Add to Definition 4*: "....The Owner or Owners means American Iron & Metal and the representatives of the Owner on site.

NEW DEFINITIONS

.7 Add the following definition:

"**Proper Invoice**

Proper Invoice means a “proper invoice” as defined in the *Payment Legislation*, if any, and as may be modified by written agreement between the parties to the extent permitted by such *Payment Legislation."*

.8 Add the following definition:

"**Submittals**

Submittals are documents or items required by the Contract Documents to be provided by the *Contractor* such as:

.1 *Shop Drawings*, samples, models, mock ups to indicate details or characteristics, before the portion of the *Work* that they represent can be incorporated into the *Work,* and

.2 As-built drawings and manuals to provide instructions to the operation and maintenance of the *Work.*

.9 Add the following definition:

"**Furnish/Supply**

Furnish or supply means procure or fabricate materials, equipment or components, or perform services to the extent indicated. Where used with respect to materials, equipment or components, the term shall include delivery to the Place of Work but is not intended to include the installation of the item, either temporary or final."

.10 Add the following definition:

"**Install**

Install means place materials, including fastenings and adhesives, equipment or components, including the receiving, unloading, transporting, storage, uncrating and installing, and the performance of such testing and final work as is compatible with the degree of installation specified."

PART 1 - THE GENERAL PROVISIONS

GENERAL PROVISIONS

.11 Where a General Condition or paragraph of the General Conditions of the Stipulated Price Contract is deleted by these Supplementary Conditions, the numbering of the remaining General Conditions or paragraphs shall remain unchanged, and the numbering of the deleted item will be retained, unused.

GC 1.1 CONTRACT DOCUMENTS

.12 Delete paragraphs 1.1.3 and 1.1.4 in their entirety and replace them with the following:

1.1.3 The Contractor shall review the *Contract Documents* for the purpose of facilitating and co-ordination and execution of the *Work* by the Contractor. The *Contractor* shall report promptly to the *Consultant* any ambiguities, design issues or other matters requiring clarification made known to the *Contractor* or that the *Contractor* may discover from such a review. Such review by the *Contractor* shall comply with the standard of

care described in paragraph 3.9.1 of the *Contract.*

1.1.4 Except for its obligation to review the *Contract Documents* and report the result pursuant to paragraph 1.1.3, the *Contractor* is not responsible for ambiguities, design issues or other matters requiring clarification in the *Contract Documents* and does not assume any responsibility to the *Owner* or to the *Consultant* for the accuracy of the *Contract Documents*. Without limiting the foregoing, the *Contractor* shall not be liable for any damages or costs resulting from any ambiguities, design issues or other matters requiring clarification in the *Contract Documents* which the *Contractor* could not reasonably have discovered from such a review in accordance with the standard of care. If the Contractor does discover any ambiguities, design issues or other matters requiring clarification in the *Contract Documents*, the *Contractor* shall not proceed with the work affected until the *Contractor* has received modified or additional information from the *Consultant.* The impacts of any ambiguities, design issues or other matters requiring clarification in the *Contract Documents*, including to the *Contract Price* and *Contract Time,* shall be addressed by the parties in accordance with Part 6 – CHANGES."

.13 Add the following to the end of subparagraph 1.1.6.2:

" Except to the extent the *Consultant* is indemnified as a third party beneficiary as provided insubparagraphs 9.2.7.4 and 9.5.3.4 and in paragraph 13.1.3"

PART 2 - ADMINISTRATION OF THE CONTRACT

GC 2.2 ROLE OF THE CONSULTANT

.1 In paragraph 2.2.3 add the following to the end:

"Without limiting the foregoing, the *Consultant* may appoint one or more authorized representatives in writing who may fulfill the obligations of the Consultant under this *Contract*."

.2 In paragraph 2.2.8 add the words ", written statements" after the word "interpretations" in both the first and second sentences; and

add the following to the end of paragraph 2.2.8:

" The Owner and the *Contractor* shall waive any claims against the Consultant arising out of its making of any interpretations, written statements or findings in accordance with paragraphs 2.2.6, 2.2.7, 2.2.8, and 7.1.2, but only to the extent that any such interpretations, written statements, and findings are made by the *Consultant* in an unbiased manner, and in accordance with the *Consultant's* professional standard of care at law."

.3 In paragraph 2.2.13 add the words "which are provided" before the words "by the Contractor".

GC 2.4 DEFECTIVE WORK

.4 In paragraph 2.4.1:

.1 Add after the words “shall promptly correct” the phrase “in a manner acceptable to the *Owner* and the *Consultant*”; and

.2 Add after the words “Contract Documents” the phrase “or work that the Contractor discovers to be defective, whether or not the defective work had been identified by the *Consultant*, and”.

.5 Add new paragraph 2.4.4 as follows:

"2.4.4 The *Contractor* shall prioritize the correction of any defective work which, in the sole discretion of the *Owner*, adversely affects the day-to-day operation of the *Owner. "*

PART 3 - EXECUTION OF THE WORK

GC 3.1 CONTROL OF THE WORK

.1 Add new paragraph 3.1.3:

"3.1.3 Prior to commencing individual procurement, fabrication and construction activities, the *Contractor* shall verify, at the *Place of the Work*, all relevant measurements and levels necessary for proper and complete fabrication, assembly and installation of the *Work* and shall further carefully compare such field measurements and conditions with the requirements of the *Contract Documents*. Where dimensions are not included or contradictions exist, or exact locations are not apparent, the *Contractor* shall immediately notify the *Consultant* in writing and obtain written instructions from the *Consultant* before proceeding with any part of the affected work.

G.C. 3.2 CONSTRUCTION BY OWNER AND OTHER CONTRACTORS

.2 Add new paragraph 3.2.7 as follows:

"3.2.7 At the commencement of the *Work*, the *Contractor* shall prepare for the review and acceptance of the *Owner* and the *Consultant*, a schedule indicating the times, within the construction schedule referred to in GC 3.4, that items that are specified to be *Owner* purchased and *Contractor* installed or hooked up are required at the site to avoid delaying the progress of the *Work."*

G.C. 3.7 LABOUR AND PRODUCTS

.3 Add the following to the end of paragraph 3.7.1:

"The *Contractor* represents that it has sufficient skilled employees to replace, subject to the *Owner’s* approval, acting reasonably, its designated supervisor and project manager in the event of death, incapacity, removal or resignation."

.4 Add new paragraphs 3.7.4 and 3.7.5 as follows:

"3.7.4 The *Owner* shall provide the *Contractor* in a timely manner with all relevant information (including storage, protection, and installation requirements) regarding *Products* to be supplied by the *Owner* or other contractors and, prior to delivery of any such *Products* to the *Place of the Work*, the *Owner* shall obtain the *Contractor’s* written approval of the delivery date and proposed storage,

protection and installation requirements."

"3.7.5 Once the *Contractor* has accepted delivery of *Products*, the *Contractor* shall be responsible for the safe storage and protection of *Products* as required to avoid dangerous conditions or contamination to the *Products* or other persons or property. *Products* shall be stored in locations and at the *Place of the Work* to the satisfaction of the *Owner* and the *Consultant* as agreed and approved by the Contractor pursuant to paragraph 3.7.4.

Notwithstanding the foregoing, the *Contractor* shall not be responsible for any *Products* supplied by the *Owner* or other contractors unless:

.1 the *Contract Documents* expressly stipulate that such *Product* is to be the Contractor*'s* responsibility and to be installed by the *Contractor* as part of the *Work;*

.2 the *Contractor* has or has received from the *Owner* proof of insurance coverage sufficient, at a minimum, to cover the replacement cost of such *Product*; and

.3 the *Owner* obtained the *Contractor's* approval as required by paragraph 3.7.4."

GC 3.8 SHOP DRAWINGS

.5 Add the words ".....**AND OTHER SUBMITTALS**" to the title of GC 3.8 after the words "**SHOP DRAWINGS**".

.6 Add the words "and Submittals" after the words "*Shop Drawings*" in paragraphs 3.8.1, 3.8.2, 3.8.3, 3.8.3.2, 3.8.5, 3.8.6, and 3.8.7.

.7 Delete paragraph 3.8.2 in its entirety and replace it with new paragraph 3.8.2 as follows:

"3.8.2. Prior to the first application for payment, the *Contractor* and the *Consultant* shall jointly prepare a schedule of the dates for submission and return of *Shop Drawings* and *Submittals* in an orderly sequence."

.8 Delete the words "with reasonable promptness so as to cause no delay in the performance of the *Work*" and replace them with the words "within 10 Working Days or such longer period as may be reasonably required" in paragraph 3.8.7.

GC 3.9 PERFORMANCE BY CONTRACTOR

.9 Add new General Condition GC 3.9 as follows:

GC 3.9 PERFORMANCE BY CONTRACTOR

.10 " 3.9.1 In performing its services and obligations under the *Contract*, the Contractor shall exercise a standard of care, skill and diligence that would normally be provided by an experienced and prudent contractor supplying similar services for similar projects. The *Contractor* acknowledges and agrees that throughout the *Contract*, the *Contractor's* obligations, duties and responsibilities shall be interpreted in accordance with this standard. The *Contractor* shall exercise the same standard of due care and diligence in respect of any *Products*, personnel, or procedures which it may recommend to the *Owner."*

PART 4 - ALLOWANCES

GC 4.1 CASH ALLOWANCES

.1 Delete paragraph 4.1.7 in its entirety and substitute new paragraph 4.1.7:

"4.1.7. At the commencement of the *Work*, the *Contractor* shall prepare for the review and acceptance of the *Owner* and the *Consultant*, a schedule indicating the times, within the construction schedule referred to in GC 3.4, that items called for under cash allowances and items that are specified to be *Owner* purchased and *Contractor* installed or hooked up are required at the site to avoid delaying the progress of the *Work."*

.2 Add new paragraph 4.1.8 as follows:

4.1.8 The *Owner* reserves the right to call, or to have the *Contractor* call, for competitive bids for portions of the *Work* to be paid for from cash allowances.

PART 5 - PAYMENT

GC 5.2 APPLICATIONS FOR PAYMENT

.1 Delete the word “first” in paragraph 5.2.7 and replace it with the word “second.”

GC 5.4 PAYMENT OF HOLDBACK UPON SUBSTANTIAL PERFORMANCE OF THE WORK

.2 Delete all paragraphs of GC 5.4 in their entirety and replace them with the following paragraphs:

"5.4.1 When the *Contractor* considers that the Work is substantially performed, or if permitted by the lien legislation applicable to the *Place of the Work* a designated portion thereof which the *Owner* agrees to accept separately is substantially performed, the *Contractor* shall, within five (5) *Working Days,* deliver to the *Consultant* and to the *Owner* a comprehensive list of items to be completed or corrected, together with a written application for a review by the *Consultant* to establish *Ready-For-Takeover* or substantial performance of the designated portion of the *Work*. Failure to include an item on the list does not alter the responsibility of the *Contractor* to complete the *Contract.*

5.4.2 The*Consultant* will review the Work to certify or verify the validity of the application and shall promptly, and in any event, no later than 10 calendar days after receipt of the *Contractor’s* application:

.1 advise the *Contractor* in writing that the *Work* or the designated portion of the *Work* is not substantially performed and give reasons why, or

.2 state the date of *Ready-For-Takeover* or a designated portion of the *Work* in a certificate and issue a copy of that certificate to each of the *Owner* and the *Contractor.*

5.4.3 Where the holdback amount required by the applicable lien legislation has not been placed in a separate lien holdback account, the *Owner* shall, no later than 10 calendar days prior to the expiry of the holdback period stipulated in the lien legislation applicable to the *Place of the Work*, place the holdback amount in a bank account in the joint names of the *Owner* and the *Contractor.*

5.4.4 Subject to the requirements of any *Payment Legislation*, all holdback amounts prescribed by the applicable lien legislation for the *Place of the Work* shall become due and payable to the *Contractor* no later than 10 *Working Days* following the expiration of the holdback period stipulated in the lien legislation applicable to the *Place of the Work*, as certified or verified by the *Consultant* when permitted by any *Payment Legislation.*

5.4.5 The *Contractor* shall submit an application for release of the lien holdback amount in accordance with the lien legislation applicable to the *Place of the Work*. Except to the extent required by any *Payment Legislation*, such application for release of the holdback shall not constitute an application for payment that is subject to *Proper Invoice* requirements.

5.4.6 Where legislation permits progressive release of the holdback for a portion of the *Work* and the *Consultant* has certified or verified that the part of the *Work* has been performed prior to *Ready-For-Takeover*, the *Owner* hereby agrees to release, and shall release the holdback for such portion of the *Work* to the *Contractor* in accordance with such legislation.

5.4.7 Notwithstanding any progressive release of the holdback, the *Contractor* shall ensure that such parts of the *Work* are protected pending the issuance of a final certificate for payment or until the *Owner* takes early occupancy in accordance with GC12.2, whichever comes first, and shall be responsible for the correction of defects or work not performed regardless of whether or not such was apparent when the holdback was released."

GC 5.5 FINAL PAYMENT

.3 Add to the end of paragraph 5.5.1 the following sentence:
"The application for final payment shall meet the requirements of a *Proper Invoice."*

.4 Add the following to the end of paragraph 5.5.3:
"Subject to any *Payment Legislation*, when the *Consultant* finds the *Contractor's* application for final payment to be not valid, the *Contractor* shall revise and resubmit the application when the *Contractor* has addressed the reasons given by the *Consultant.*"

PART 6 - CHANGES IN THE WORK

GC 6.3 CHANGE DIRECTIVE

.1 Delete the word “and” from the end of subparagraph 6.3.7.17.

.2 Delete the period from the end of subparagraph 6.3.7.18 and replace it with “; and”.

.3 Add new subparagraph 6.3.7.19 as follows:
"6.3.7.19 Safety measures and requirements."

GC 6.4 CONCEALED OR UNKNOWN CONDITIONS

.4 Add new subparagraph 6.4.5:

"6.4.5 The *Contractor* confirms that, prior to bidding the *Project*, it carefully reviewed the *Place of the Work* and applied to that review the degree of care and skill described in paragraph 3.9.1, given the amount of time provided between the issue of the bid documents and the actual closing of bids, the degree of access provided to the *Contractor* prior to submission of bid, and the sufficiency and completeness of the information provided by the *Owner.* The *Contractor* is not entitled to compensation or to an extension of the *Contract Time* for conditions which could reasonably have been ascertained by the *Contractor* by such careful review undertaken in accordance with this paragraph 6.4.5. "

GC 6.6 CLAIMS FOR A CHANGE IN CONTRACT PRICE

.5 Add the words “as noted in paragraph 6.6.3” after the words “of the claim” in paragraph 6.6.5 and add the words “and the *Consultant*”, at the end of paragraph 6.6.5.

GC 6.7 OVERHEAD AND PROFIT MARGINS

.6 Add new GC 6.7 as follows:

"**CONTRACTOR'S FEE FOR CHANGES IN THE CONTRACT PRICE**

6.7.1 For authorized changes in the Work the following maximum fees shall be charged:

.1 *Contractor*, Own Forces - Hire of equipment, labour and material cost plus 10% overhead and profit for the *Contractor.*

.2 *Contractor*, Work Performed by *Subcontractor* - Subcontractor's hire of equipment, labour and materials cost plus 5% overhead and profit for Contractor.

.3 Subcontractor - Hire of equipment labour and materials cost plus 10% overhead and profit for subcontractor.

6.7.2 The mark-ups referred to in 6.7.1 above shall be all inclusive of administration and implementation costs attending changes in the *Work* at the Contractor's and/or subcontractor's principal place of business and at the site.

6.7.3 No supervision costs by the *Contractor* for his superintendent or foremen shall be charged on extra work which is done before theReady-For-Takeover .

6.7.4 No extra charge shall be made for the hire of equipment for extra work if said equipment was required for the original work and the extra work can be performed in the same time period.

6.7.5 Charges for any item or items over and above the demonstrated actual costs plus the maximum percentage markups specified will not be considered by the *Consultant* in the valuation assessment.

6.7.6 In the computation of the value of changes which include both extras and credits, all credits shall be deducted from the total sum of the extra before

statutory charges or overhead and profit are added."

PART 8 - DISPUTE RESOLUTION

GC 8.3 ADJUDICATION

.1 Delete the word “prescribed” from paragraph 8.2.1 and substitute the words “provided for”.

GC 8.3 NEGOTIATIONS, MEDIATION AND ARBITRATION

.2 Add the following new paragraphs 8.3.9 to 8.3.13:

"8.3.9 Within five days of receipt of the notice of arbitration by the responding party under paragraph 8.3.6, the *Owner* and the *Contractor* shall give the *Consultant* a written notice containing:

.1 a copy of the notice of arbitration;
.2 a copy of supplementary conditions 8.3.9 to 8.3.14 of this *Contract*, and;
.3 any claims or issues which the *Contractor* or the *Owner*, as the case may be, wishes to raise in relation to the *Consultant* arising out of the issues in dispute in the arbitration.

8.3.10 The *Owner* and the *Contractor* agree that the *Consultant* may elect, within ten days of receipt of the notice under paragraph 8.3.9, to become a full party to the arbitration under paragraph 8.3.6 if the *Consultant:*

.4 has a vested or contingent financial interest in the outcome of the arbitration;
.5 gives the notice of election to the *Owner* and the *Contractor* before the arbitrator is appointed;
.6 agrees to be a party to the arbitration within the meaning of the rules referred to in paragraph 8.3.6, and,
.7 agrees to be bound by the arbitral award made in the arbitration.

8.3.11 Without limiting and subject to the *Owner* and *Contractor’s* rights under paragraph 8.3.12 to challenge whether the *Consultant* has satisfied the requirements of paragraph 8.3.10, if an election is made under paragraph 8.3.10:

.8 the *Owner* or *Contractor* may request particulars and evidence of the *Consultant’s* vested or contingent financial interest in the outcome of the arbitration;
.9 the *Consultant* shall participate in the appointment of the arbitrator; and,
.10 notwithstanding the rules referred to in paragraph 8.3.6, the time period for reaching agreement on the appointment of the arbitrator shall begin to run from the date the respondent receives a copy of the notice of arbitration.

.3 8.3.12 The arbitrator in the arbitration in which the *Consultant* has elected under paragraph 8.3.10 to become a full party may:

.1 on application of the *Owner* or the *Contractor*, determine whether the *Consultant* has satisfied the requirements of paragraph 8.3.10, and;

.2 make any procedural order considered necessary to facilitate the addition of the *Consultant* as a party to the arbitration.

.4 8.3.13 The provisions of paragraph 8.3.9 shall apply (with all appropriate changes being made) to written notice to be given by the *Consultant* to any sub-consultant. "

PART 9 - PROTECTION OF PERSONS AND PROPERTY

GC 9.1 PROTECTION OF WORK AND PROPERTY

.1 Delete subparagraph 9.1.1.1 in its entirety and replace it with the following:

"9.1.1.1 errors or omissions in the *Contract Documents* which the *Contractor* could not have discovered applying the standard of care described in paragraph 3.9.1;"

.2 Delete paragraph 9.1.2 in its entirety and replace it with the following:

"9.1.2 Before commencing any *Work*, the *Contractor* shall determine the locations of all underground utilities and structures indicated in the *Contract Documents*, or that are discoverable by applying to an inspection of the *Place of Work* to the degree of care and skill described in paragraph 3.9.1."

GC 9.2 TOXIC AND HAZARDOUS SUBSTANCES

.3 Add the following words to the paragraph 9.2.6 after the word "responsible":

"...or whether any toxic or hazardous substances or materials already at the *Place of the Work* (and which were then harmless or stored, contained or otherwise dealt with in accordance with legal and regulatory requirements) were dealt with by the *Contractor* or anyone for whom the *Contractor* is responsible in a manner which does not comply with legal and regulatory requirements, or which threatens human health and safety or the environment, or material damage to the property of the *Owner* or others,...."

.4 In subparagraph 9.2.7.4.,add "....and the *Consultant*...." after the word "*Contractor*".

.5 Add the following words to the paragraph 9.2.8 after the word "responsible":

"or that any toxic or hazardous substances or materials already at the *Place of the Work* (and which were then harmless or stored, contained or otherwise dealt with in accordance with legal and regulatory requirements) were dealt with by the *Contractor* or anyone for whom the *Contractor* is responsible in a manner which does not comply with legal and regulatory requirements, or which threatens human health and safety or the environment, or material damage to the property of the *Owner* or others"

GC 9.5 MOULD

.6 In subparagraph 9.5.3.4., add "....and the *Consultant*...." after the word "*Contract*or".

PART 10 GOVERNING REGULATIONS

GC 10.2 LAWS, NOTICES, PERMITS, AND FEES

.1 Delete from the first line of paragraph 10.2.5 the word, "The...." and substitute the words: "Subject to paragraph 3.9.1, the" .

PART 11 INSURANCE

GC 11.1. SUBROGATION

.1 Add the following new paragraph 11.1.9

"11.1.9 *Contractors* Insurance coverage shall not allow subrogation claims by the insurer against the *Consultant. "*

PART 12 OWNER TAKEOVER

GC 12.1 READY-FOR-TAKEOVER

.1 After the second occurrence of the term “Ready-for-Takeover” insert before the term “Ready-for-Takeover” in paragraph 12.1.3 the words “determination of”.

GC 12.2 EARLY OCCUPANCY BY THE OWNER

.2 Delete the word “achieve” in paragraph 12.2.4 and replace it with the words “have achieved”.

GC 12.3 WARRANTY

.3 In paragraph 12.3.1 delete the word "one year" and replace it with the words "two years".

.4 Delete the word “The” from the first line of paragraph 12.3.2 and replace it with the words "Subject to paragraph 3.9.1, the ".

.5 Add new paragraphs 12.3.7, 12.3.8 and 12.3.9:

"12.3.7 Warranty periods shall recommence on remedy of defective work.

12.3.8 The carrying out of replacement work and making good of defects shall be executed at times convenient to the *Owner* and this may require work outside of normal working hours at the *Contractor's* expense.

12.3.9 Prior to the expiry of the warranty period, the *Owner* reserves the right to carry out a detailed and exhaustive inspection of the Work with regard to all work performed under the *Contract.*"

PART 13 INDEMNIFICATION AND WAIVER

GC 13.1 INDEMNIFICATION

.1 Add new paragraph 12.1.0 as follows:

"13.1.0 The Contractor shall indemnify and hold harmless the Consultant, its agents and employees from and against all claims, demands, losses, costs, damages, actions, suits, or proceedings by third parties that arise out of, or are attributable to the Contractor’s performance of the Contract, provided such claims are:

.1 attributable to bodily injury, sickness, disease, or death, or to injury to or destruction of tangible property, and

.2 caused by negligent acts or omissions of the Contractor or anyone for whose negligent acts or omissions the Contractor is liable, and

.3 made by Notice in Writing within a period of 6 years from the Ready-for-Takeover date or within such shorter such period as may be prescribed by any limitation statute or the Province or Territory of the Place of Work.

.2 Add the words “13.1.0,” after the word “paragraphs” in paragraph 13.1.3.

END OF SECTION 00 73 02

SECTION 01 11 00
SUMMARY OF WORK

WORK OF THIS CONTRACT

1.01 WORK OF THIS CONTRACT

.1 The *Work* of this *Project,* of which *Work* of this *Contract* is part, comprises the construction and completion of a two storey building, associated mechanical and electrical connections and all associated site works as described and illustrated in the *Contract Documents* at 1533 McAdoo's Lane, Kingston, ONin Kingston, Ontario

.2 The following is a brief description of *Work* required for completion of this *Project*. This is not a "Scope of Work".

.3 The *Work* includes the provision of all labour, materials, plant, equipment, supervision and services, overhead and profit, required to execute the *Project,* as indicated on the *Drawings*, as specified herein and as required for a complete Project.

1.02 DIVISION OF WORK

.1 Division of the *Work* among *Subcontractors* and *Suppliers* is solely the Contractor's responsibility. Consultant and Owner assume no responsibility to act as an arbiter to establish subcontract limits between Sections or Divisions of the *Work*

1.03 SPECIFICATIONS LANGUAGE AND STYLE

.1 These specifications are written in the imperative mood and in streamlined form. The imperative language is directed to the Contractor*,* unless stated otherwise.

.2 Complete sentences by reading "shall", "*Contractor* shall", "shall be", and similar phrases by inference. Where a colon (;) is used within sentences and phrases, read the words "Shall be" by inference.

.3 Fulfill and perform all indicated requirements whether stated imperatively or otherwise.

.4 When used in the context of a Product, read the word "provide" to mean "supply and install to result in a complete installation ready for its intended use".

1.04 CONTRACT DOCUMENTS FOR CONSTRUCTION PURPOSES

.1 Owner will supply *Contractor* with a complete set of *Contract Documents* in electronic form before commencement of the *Work*. *Contractor* may print hard copies for construction purposes as required.

.2 Owner will also provide *Contractor* with 2 hard copy sets of Contract Documents for construction purposes. Additional hard copy sets shall be at Contractor's expense for the cost of printing, handling and shipping.

1.05 DOCUMENTS AT SITE

.1 Keep the following documents at *Place of the Work*, stored securely and in good order and available to *Owner* and *Consultant* in hard copy form;

.1 Current *Contract Documents,* including *Drawings*, *Specifications,* and addenda.

.2 *Change Orders, Change Directives* and *Supplementary Instructions*.

.3 Reviewed *Shop Drawings*, *Product* data and samples.
.4 Field test reports and records.
.5 Construction progress schedule.
.6 Meeting minutes
.7 Manufacturer's certification documents
.8 Permits, inspection certificates, and other documents required by authorities having jurisdiction.
.9 Current as-built drawings.
.10 Material Safety Data Sheets (MSDS) for all controlled *Products*

.2 Post at the Project Site a copy of each of the following:
.1 *Contractor*'s company safety policy.
.2 Labour and Materials Payment Bond.
.3 Building Permit

.3 Ensure that all trades and all *Subcontractors* are in possession of, or have access to, a complete and up to date set of *Contract Documents* and the latest edition of all codes, regulations and standards that are applicable to their portion of the *Work*.

1.06 COMMENCEMENT AND COMPLETION OF WORK

.1 Time and all time limits stated in the *Contract Documents* are of the essence of the *Contract*. Perform work expeditiously and with adequate forces to achieve *Ready-For-Takeover* within the time specified in the *Contract Documents*.

.2 Subject to being in possession of a copy of the *Building Permit* and Designated Substances/Hazardous Materials Survey Report as required by the *Contract Documents*, start of *Work* to begin May 2023

.3 Perform the *Work* within the time limit established prior to commencement of the *Work*, as per the *Bid Schedule* submitted by the *Contractor* at the time of their *Bid Submission.*

1.07 PERMITS

.1 The *Owner* has applied and paid for the *Building Permit*.

.2 *Contractor* to apply for, arrange, and pay for all other inspections, permits, including the occupancy permit, and approvals required for execution of the *Contract*.

.3 Refer to section 01 41 00 - Regulatory Requirements for further requirements.

1.08 WORK SEQUENCE

.1 The *Contractor* shall complete the work utilizing the most rapid and least expensive methods, consistent with the *Owner*'s requirements.

1.09 CONTRACTOR'S USE OF PREMISES

.1 Except as otherwise specified the *Contractor* shall have complete use of the premises for the performance of the *Work* from time of award of *Contract* until the date of Ready-For-Takeover

.2 The *Contractor* shall assume responsibility for the premises assigned to them for the performance of the *Work*.

.3 Confine *Construction Equipment*, *Temporary Work*, storage of *Products,* waste products and debris, and all other construction operations to limits required by laws, ordinances, permits and *Contract Documents,* whichever is most restrictive. Do not unreasonably encumber Place of the Work

.4 If requested by the *Owner*, the *Contractor* shall immediately, and at their own expense, move and relocate temporary facilities, materials and other equipment as directed by the *Consultant* or the *Owner*.

.5 Provide all necessary security measures to protect the premises, materials and equipment stored on site during the course of work, up to the date of *Ready-For-Takeover*

.6 Refer to section 01 50 00 - Temporary Facilities and Controls * for further requirements.

1.10 MECHANICAL AND ELECTRICAL SERVICES

.1 The location of existing utility services has been determined from available records and data. Verify exact locations, on site, prior to beginning *Work*. Report any discrepancies to the *Consultant* so that a course of action can be determined.

.2 The *Contractor* shall be responsible for the connection of project service lines to *Utility Company* lines and sources.

.3 Refer to Mechanical and Electrical specification sections, and mechanical, electrical and Civil *Drawings* for additional information concerning existing utility lines.

1.11 OFF-LOADING

.1 Use only site entrances and exits designated by the *Consultant* or the *Owner*.

.2 *Subcontractors* and *Suppliers* shall provide minimum 48 hours notice of any major material deliveries to the site. All loading and off-loading shall be carried out as directed by the *Contractor.*

1.12 REPLACEMENT OF GLASS

.1 Replace all damaged, broken or scratched glass upon completion of *Work*, at no additional cost to the *Owner.*

.2 Employ a qualified glass company for repair or replacement.

1.13 SURVEY CERTIFICATE

.1 Upon completion of *Work*, provide a survey certificate, accurately indicating a dimensioned outline of the building, its relation to the location of streets, property lines and elevations to datum.

.2 The survey certificate shall be provided by a professional Land Surveyor, licensed to practice in the Province of the *Work*.

.3 Refer to Section

1.14 SUBSTANTIAL PERFORMANCE RE-INSPECTION FEES

.1 Upon issuance of a *Certificate of Ready-For-Takeover* and submission of all items specified within these specifications as requirements for achieving *Ready-For-Takeover*, the *Consultant* will arrange for a site inspection to ascertain that *Ready-For-Takeover* has actually been achieved.

.2 Representatives of the *Consultant* AND *Owner* will attend this inspection.

.3 If upon completion of this inspection, it has been shown that *Ready-For-Takeover* has not been achieved, a new inspection date will be established and a re-inspection will be held. All costs for this re-inspection and any other inspections required for establishment of *Ready-For-Takeover* will become the *Contractor*'s responsibility.

END OF SECTION 01 11 00

SECTION 01 11 23
OWNER-SUPPLIED PRODUCTS

1.01 DEFINITIONS

.1 *Owner Supplied Products* (*OSP*) means a product that will be supplied by the *Owner* to the *Contractor* for Installation ny the *Contractor* as part of the *Work.*

.2 *Not In Contract* (*NIC*) means an item that requires for its later installation and that is not provided as part of the *Work*.

.3 *Rough-in* (*RI*) means to refer to *Mechanical* and *Electrical Drawings* for service rough-in requirements. Allow for necessary backing within wall or ceiling assembly to allow for anchorage of equipment as per *Manufacturer*'s written recommendations and instructions.

1.02 WORK INCLUDED

.1 This section describes items that are to be:

.1 *Owner* to *Purchase Direct,* for equipment to be supplied and installed by *Supplier*, delivery to site and work to be coordinated by Contractor

.2 *Owner* to *Purchase Direct*, to be supplied and installed by *Owner*. *Contractor* to allow for *Rough In* requirements.

.3 *Owner* to *Purchase Direct*. Material to be received, stored, secured and installed by *Contractor* as per *Manufacturer's Recommended Instructions*.

.4 *Owner* to *Purchase Direct*. Material to be received, stored, secured and installed by *Contractor* as per *Manufacturer's Recommended Instructions*. Final connection to be performed by *Owner*.

1.03 OWNER SUPPLIED PRODUCTS

.1 *Owner*'s Responsibilities:

.1 Order and pay for *Owner*-supplied Products not already in Owner's possession.

.2 Arrange and pay for delivery of shop drawings (cut sheets), product data, samples and manufacturer's instruction to *Contractor*.

.3 Deliver supplier's bill of materials to *Contractor.*

.4 Arrange and pay for delivery of *Owner* supplied *Products* F.O.B the *Place of the Work*, within time frames required by *Contractor'*s progress schedule. If delivered sooner than required by *Contractor'* s latest progress schedule submitted to *Owner*, arrange and pay for delivery to a temporary storage location and subsequent delivery to site.

.5 Advise Contractor in writing of the value of *Owner*-supplied *Product*s for Contractor's insurance purposes.

.6 Inspect deliveries jointly with the *Contractor*.

.7 Submit claims for transportation damage.

.8 Arrange for replacement of damaged, defective or missing items , as noted at time of delivery.

.9 Arrange for manufacturer's field services, to be coordinated with Contractor.

.10 Arrange for delivery of manufacturer's warranties to *Contractor* for inclusion in operation and maintenance manual.

.2 *Contractor*'s Responsibilities:

.1 Designate in progress schedule, time frames for delivery of *Owner*-supplied Products to the site and for receipt of related submittals. If the site is not ready to receive delivery of *Owner*-supplied *Products* within the time frame indicated in the latest progress schedule submitted to *Owner,* arrange and pay for delivery to a temporary storage location and subsequent delivery to site.

.2 Review all required submittals and notify *Consultant* of any observed discrepancies or anticipated problems.

.3 Ensure that course of construction insurance is adequate to cover Owner-supplied Products.

.4 Receive, unload and secure *Owner*-Supplied *Products* at the *Place of the Work.*

.5 Inspect deliveries jointly with the *Owner*, record and notify *Owner* and Consultant of shortages and damaged or defective items.

.6 Handle *Owner* Supplied *Products* at *Place of the Work ,* including uncrating and storage. Dispose of waste materials and debris.

.7 Take appropriate precautions to protect *Owner*-supplied *Product* from loss or damage, including damage from exposure to elements.

.8 Repair or replace items damaged on site.

.9 Assemble, install, connect, adjust and finish *Owner* Supplied *Products* where specified as being installed by *Contractor*.

.10 Arrange for inspections required by all authorities having jurisdiction as specified.

.11 Arrange for, or conduct, performance testing as specified.

.12 Provide workmanship warranty for installation.

.3 Substitutions / Discontinued Items:

.1 *Owner* reserves the right to substitute any items which are discontinued or items in which current products are technically superior to originally specified item.

.2 *Owner* will make every effort to ensure substitutions call for same rough-in requirements as originally specified equipment. Where applicable, in the event rough-in requirements differ, *Owner* will allow the *Contractor* opportunity to review new selection for cost and time implications prior to entering change into *Contract*.

.4 Appendices: The following appendices are appended to and form part of this section:

.1 Appendix A: Schedule of Product Supplied by Others

Appendix a: schedule of Products supplied by Others

Product Description:	Supplied By:	Received By:	Installed By:	Notes:
Ext. Signage	*Signage Supplier*	*Contractor*	*Signage Supplier*	*Contractor* responsible for blocking, electrical rough-in & covering of any exterior wiring. *Signage Supplier* responsible for signage permits.
Truck Scale	*Owner*	*Contractor*	*Owner*	*Contractor* responsible for electrical rough-in

This page intentionally left blank

SECTION 01 25 00
SUBSTITUTION PROCEDURES

PART 1 GENERAL

1.01 SECTION INCLUDES

.1 Procedural requirements for proposed *Substitutions*.

1.02 DEFINITIONS

.1 *Substitutions:* Means a *Product,* a manufacturer, or both, not originally specified in the *Contract Documents* by proprietary name but proposed for use by *Contractor* in place of a Product, a manufacturer, or both specified by proprietary name.

.2 *Substitutionsfor Cause*: A Product, a manufacturer, or both, not originally specified in the Contract Documents by proprietary name but proposed for use by *Contractor* due to changes in *Project* circumstances beyond the *Contractor's* control, in place of a Product, a manufacturer, or both, specified by proprietary name.

.1 Unavailability.
.2 Regulatory changes.

.3 *Substitutions for Convenience*: A Product, a manufacturer, or both, not originally specified in the Contract Documents by proprietary name by proposed for use by *Contractor* due to possibility of offering a substantial advantage to the Project

.4 Cost.

.1 Delivery time.
.2 Performance.
.3 Compatibility.
.4 Appearance.
.5 Other advantage.
.6 Alternative Product proposed which is equal to or better than the specified Product.

1.03 REFERENCE STANDARDS

.1 CSI/CSC Form 1.5C - Substitution Request (During the Bidding/Negotiating Stage) Current Edition.

.2 CSI/CSC Form 13.1A - Substitution Request (After the Bidding/Negotiating Phase) Current Edition.

SUBSTITUTION PROCEDURES

2.01 GENERAL REQUIREMENTS

.1 Generally, specific materials, *Products* and systems are specified in the *Contract Documents* to provide a standard of acceptance. Except where *Substitutions* are specifically excluded in the individual sections of the *Specifications*, equivalent materials, *Products,* or systems by other manufacturers are acceptable as *Substitutions*, provided that the properties and compliancies of the *Substitutions* meet or exceed the properties and compliancies of the specified materials, *Products* and systems in all respects and that items exposed to sight are of the same appearances the specified items.

.2 Where the terms "or equal", "or equivalent" or terms of similar meaning are used in the *Specifications*, this shall not be construed as an invitation to unilaterally provide a Substitutions. The use of these terms does not relieve the *Contractor* from their responsibility to follow the procedures for approval of *Substitutions* specified herein.

.3 *Substitutions* will be permitted only with *Owner* and/or *Consultant* signed acceptance of the proposed *Substitutions* on the required submittal form.

.4 The *Owner* and the *Consultant* reserve the right to request such additional information as the *Consultant* deems necessary prior to acceptance or rejection of proposed *Substitutions*.

.5 The burden of proof is on the proposer. In the event that the *Owner* or the *Consultant* deems the information provided with the request for approval of *Substitutions* to be inadequate, the request may be rejected.

.6 A *Substitutions* request for *Products*, assemblies, materials, and equipment constitutes a representation that the submitter:

.1 Has investigated proposed *Product* and determined that it meets or exceeds the quality level of the specified *Product*, equipment, material, assembly, or system.

.2 Agrees to provide the same warranty for the *Substitutions* as for the specified *Project*.

.3 Agrees to provide the same or equivalent maintenance service and source of replacement parts, as applicable.

.4 Agrees to coordinate installation and make changes to other Work that may be required for the *Work* to be complete, with no additional cost to the *Owner*. A later claim for an addition to the *Contract Price* or *Contract Time*because of changes in *Work* necessitated by use of *Substitutions* will not be considered.

.5 Waives claims for additional costs or time extension that may subsequently become apparent.

.6 Agrees to reimburse the *Owner* and the *Consultant* for review or redesign services associated with review of the proposed *Substitutions*, and re-approval by authorities; and changes to the building design to properly accommodate the *Substitutions*.

.7 A *Substitutions* request for a specified installer constitutes a representation that the submitter has acted in good faith to obtain the services of the specified installer, but was unable to come to commercial or other terms.

.8 If *Contractor* fails to order a specified *Product* or order a *Product* by a specified manufacturer in adequate time to meet *Contractor's* construction schedule, *Consultant* will not consider that a valid reason to accept a *Substitution*.

2.02 SUBMISSION REQUIREMENTS FOR PROPOSED SUBSTITUTIONS

.1 Document each request with complete data substantiating compliance of proposed *Substitutions* with the *Contract Documents*. The burden of proof is on the proposer.

.1 Note explicitly any non-compliant characteristics.

.2 Content: Include information necessary for tracking the status of each *Substitutions* request, and information necessary to provide an actionable

response.

.1 The *Substitutions* request documentation must include the following:

.1 *Project* Information:

.1 Official *Project* name and number, and any additional required identifiers established in *Contract Documents*.

.2 *Owner's, Consultant's,* and *Contractor's* names.

.2 *Substitutions* Request tracking Information:

.1 Discrete and consecutive *Substitutions* request number, and descriptive subject/title.

.2 Indication of whether the *Substitutions* are for cause or convenience.

.3 Issue date.

.4 Reference to particular *Contract Documents* and *Specifications* section number, title, and article/paragraph(s).

.3 *Substitution* request Information:

.1 Reason(s) for proposing the *Substitution.*

.2 Identification of the *Substitution,* including product name and manufacturer's name, address, telephone numbers and website.

.3 In the case of materials or *Products*, country of manufacture.

.4 A statement verifying that the *Substitution* will not affect the *Contract Price* and *Contract Time* or, if applicable, the amount and extent of a proposed increase or decrease in *Contract Price* and *Contract Time* on account of the *Substitution*

.5 A statement verifying that the *Substitution* will not affect the performance or warranty of other parts of the *Work.*

.6 Manufacturer's *Product* literature for the *Substitution,* including material descriptions, compliance with applicable codes and reference standards, performance and test data, compatibility with contiguous materials and systems and envrionmental considerations.

.7 *Product* samples as applicable.

.8 Identification of any consequential changes in the *Work* to accommodate the *Substitution* and any consequential effects on the performance of the *Work* as a whole. A later claim for an increase to the *Contract Price* or *Contract Time* for other changes in the *Work* attributable to the *Substitution* will not be considered.

.9 Availability of maintenance services, and sources of replacement materials and parts for the *Substitution*, as applicable, including associated costs and time frames.

.10 In the case of materials, *Products* or systems, a direct comparison between the properties and compliancies of the specified materials, *Products* or systems with the properties and compliancies of the proposed *Substitutions*, arranged in tabular form, in the same sequence as

specified in the applicable *Specifications* section or in the sequence listed in the specified manufacturer's published literature, as appropriate - with any significant variations clearly highlighted.

.11 Attached comparative data: *Provide* point-by-point, side-by-side comparison addressing essential attributes specified, as appropriate and relevant for the item:

.1 Physical characteristics.
.2 In-service performance.
.3 Expected durability.
.4 Visual effect.
.5 Sustainable design features.
.6 Warranties.
.7 If applicable, estimated life cycle cost savings resulting from the Substitution.
.8 *Shop Drawings, Product* data, and certified test results attesting to the proposed material or *Product* equivalence.
.9 Other salient features and requirements.

.12 Include, as appropriate or requested, the following types of documentation:

.1 *Product* Data:
.2 Samples.
.3 Certificates, test, reports or similar qualification data.
.4 *Drawings*, when required to show the impact on adjacent construction elements.
.5 A list of no less than five projects of comparable size and complexity, where the proposed *Substitutions* has been used in a similar application. Such projects shall have been in service for at least five (5) years and, where applicable, shall have been subjected to climatic conditions similar to those experienced at the location of the *Project.* The list shall include the name and current telephone number of the *Owner* or prime *Consultant* for each Project.

.4 Impact of the *Substitutions*:

.1 Savings to the *Owner* for accepting the *Substitutions* (if applicable).
.2 Change to *Contract Time* due to accepting the *Substitutions.*

.3 Limit each request to a single proposed *Substitution* item.

.4 *Substitutions* which do not satisfy the above requirements may be rejected by the *Owner* and/or the *Consultant*. Materials, *Products* and systems which are so rejected shall be replaced by the specified items at no cost to the *Contract.*

2.03 SUBSTITUTION PROCEDURES DURING CONSTRUCTION

.1 Submit a request for *Substitutions* for cause within 14 days of discovery of the need for the *Substitutions,* but not later than 14 days prior to time the required for review and acceptance by the *Consultant,* in order to maintain the *Project* schedule.

.2 Submit request for *Substitutions* for convenience immediately upon discovery of its potential advantage to the *Project,* but not later than 14 days prior to the time required for review and acceptance by the *Consultant,* in order to maintain the *Project* schedule.

.1 In addition to meeting the general documentation requirements, document how the requested *Substitutions* benefits the *Owner* through cost savings, time savings, better in-service performance, greater energy conservation, or in other specific ways.

.2 Document means of coordinating of the *Substitutions* with other portions of the *Work*, including work by affected other *Contractors.*

.3 Bear the costs associated with the proposed *Substitutions* of:

.1 The *Owner's* compensation to the *Consultant* for any required redesign, time spent processing and evaluating the request.

.2 Other construction by the *Owner*.

.3 Other unanticipated *Project* considerations.

.3 *Substitutions* will not be considered under one or more of the following circumstances:

.1 When they are indicated or implied on *Shop Drawings* or *Product* data *Submittals*, without having received prior approval.

.2 Without a separate written request.

2.04 RESOLUTION

.1 The *Consultant* may request additional information and documentation prior to rendering a decision. Provide this data in an expeditious manner.

.2 The *Consultan*t may accept a *Substitution* if satisfied that:

.1 The proposed substitute *Product* is the same type as, is capable of performing the same function as, interfaces with adjacent work the same as, and meets or excees the standard of quality, performance and, if applicable, appearance and maintenance considerations, of the specified *Product*,

.2 the proposed substitute manufacturer has capabilities comparable to the specified manufacturer, and

.3 the *Substitution* provides a benefit to the *Owner.*

.3 The *Consultant* will notify the *Contractor* in writing of decision to accept or reject the request.

.1 The *Consultant's* decision, following review of the proposed *Substitutions* will be noted on the submitted form.

2.05 ACCEPTANCE

.1 Accepted *Substitutions*s change the *Work* of the *Project*. They will be documented and incorporated into the *Work* of the *Project* by *Change Order*, *Change Directive*, *Supplemental Instruction*, or similar instruments provided for in the General & Supplementary Conditions of the *Contract.*

.2 If a *Substitution* is accepted in the form of a *Change Order*, *Change Directive*, *Supplemental Instruction* or similar instruments provided for in the General & Supplementary Conditions of the *Contract,* the *Contractor* shall not revert to an originally specified product or manufacturer without *Consultant's* prior written acceptance.

2.06 CLOSEOUT ACTIVITIES

.1 See Section 01 78 00 - Closeout Submittals, for closeout *Submittals*.

.2 Include completed Substitution Request Forms as part of the *Project* record. Include both approved and rejected Requests.

END OF SECTION 01 25 00

SECTION 01 26 00
CONTRACT MODIFICATION PROCEDURES

PART 1 GENERAL

1.01 SECTION INCLUDES

.1 Required submittal of Labour Rates.

.2 Required submittal of Equipment Rates

.3 Procedures for changes in the Contract Price by

.1 Change Order, or

.2 Change Directive

.4 Fees for Overhead and Profit related to a change in the Contract Price

.5 Procedures for Supplemental Instructions

1.02 SCHEDULE OF LABOUR RATES

.1 Prior to the first application for payment, submit for the *Consultant's* review a schedule of labour rates for all trades and classifications of trades, such as journeymen, apprentices, and foremen that will be employed in the *Work.* Provide a breakdown of payroll burden component of labour rates.

.2 Labour rates shall reflect the salaries, wages, and benefits paid to personnel in the direct employ of the *Contractor*, *Subcontractors*, and sub-Subcontractors, stated as hourly rates, that will be used when:

.1 preparing price quotations for *Change Orders,* and

.2 determining the cost of work attributable to *Change Directives.*

.3 Labour rates stated in the schedule of labour rates shall be consistent with rates that will actually be paid, and payroll burden costs that will actually be incurred, in the normal performance of the *Work*, during regular working hours. Labour rates shall not include any additional overhead and profit component.

.4 Where collective agreements apply, the labour rates shall not exceed those established by collective agreement.

.5 Obtain the *Owner's* written acceptance of the schedule of labour rates before submitting the first *Change Order* quotation.

.6 Accepted schedule of labour rates will be used solely for evaluating *Change Order* quotations and cost of performing work attributable to *Change Directives.*

.7 The *Contractor* may request amendments to the accepted schedule of labour rates if changes in the labour rates that will actually be paid, or payroll burden cost that will actually be incurred, in the normal performance of the *Work* can be demonstrated. Obtain the *Owner's* written acceptance of such changes.

1.03 SCHEDULE OF EQUIPTMENT RATES

.1 Prior to the first application for payment, submit for the *Consultant's* review a schedule of equipment rates for *Contractor* owned *Construction Equipment.*

.2 Equipment rates shall reflect the rates that will be used when:

.1 preparing price quotations for *Change Orders*, and

.2 determining the cost of work attributable to *Change Directives*.

.3 Equipment rates stated in the schedule shall be consistent with local equipment rental market rates and shall not include any additional overhead and profit component.

.4 Obtain the *Owner's* written acceptance of the schedule of equipment rates before submitting the first *Change Order* quotation.

.5 Accepted schedule of equipment rates will be used solely for evaluating *Change Order* quotations and cost of performing work attributable to *Change Directives.*

.6 The *Contractor* may request amendments to the accepted schedule of equipment rates if changes in local equipment rental market rates can be demonstrated. Obtain the *Owner's* written acceptance of such changes.

1.04 VALUATION OF CHANGES BASED ON AGREED UNIT PRICES

.1 The *Consultant* may, at the outset of the *Contract* or at any other time, request the *Contractor* to submit unit prices anticipated to be required in valuing changes in the Work.

.2 The *Contractor* shall submit such unit prices promptly upon request.

.3 The unit prices shall be valid for a specified duration.

.4 The unit prices shall exclude all fees for overhead and profit.

.5 The *Consultant* will evaluate the *Contractor's* quoted unit prices and, if accepted by the Owner in writing, the agreed unit prices shall be used to value subsequent proposed changes in the *Work* wherever they are applicable.

1.05 METHOD OF CONTRACT PRICE ADJUSTMENT - CHANGE ORDERS

.1 Unless otherwise agreed, the adjustment of the *Contract Price* on account of a proposed change in the *Work* shall be based on a quotation for a fixed price increase or decrease to the *Contract Price* regardless of the *Contractor's* actual expenditures and savings.

.2 If unit prices included in the stipulated price contract are applicable to the proposed change, the adjustment of the *Contract Price* shall be based on those unit prices, to the extent they apply.

1.06 CHANGE ORDER PROCEDURES

.1 Upon issuance by the *Consultant* to the *Contractor* of a proposed change in the *Work*, and unless otherwise requested in the proposed change or unless otherwise agreed:

.1 Submit to the *Consultant* a fixed price quotation for the proposed change in the *Work* within five (5) working days days after receipt of the proposed change in the *Work*.

.2 If requested in the proposed change, provide a detailed breakdown of the price quotation including the following to the extent applicable, with appropriate supporting documentation:

.1 Estimated labour costs, including hours and applicable hourly rates based on the accepted schedule of labour rates.

.2 Estimated *Product* costs, including Supplier quotations, estimated quantities and unit prices.

.3 Estimated *Construction Equipment* costs.

.4 Enumeration of all other estimated costs included in the price quotation.

.5 Estimated credit amounts for labour and *Products* not required on account of the proposed change.
.6 Where applicable, *Subcontractor* quotations, also including a detailed breakdown of all of the above.

.3 Include in the quotation the increase or decrease to the *Contract Time*, if any, for the proposed change, stated in number of days.
.4 Include in the quotation the number of days for which the quotation is valid.
.5 The quotation will be evaluated by the *Consultant* and the *Owner* and, if accepted by the *Owner*, be documented in the form of a signed *Change Order.*

1.07 METHOD OF CONTRACT PRICE ADJUSTMENT - CHANGE DIRECTIVES

.1 Unless the *Owner* and the *Contractor* reach an earlier agreement on the adjustment to the *Contract Price* by means of a *Change Order* that cancels the *Change Directive,* the adjustment in the *Contract Price* for change carried out by way of a *Change Directive* shall be determined as specified in the General and Supplementary Conditions of *Contract* after the change in the *Work* is completed.

1.08 CHANGE DIRECTIVE PROCEDURES

.1 If a *Change Directive* is issued for a change in the *Work* for which a proposed change was previously issued, but no *Change Order* has yet been signed, the *Change Directive* shall cancel the proposed change and any *Contractor* quotations related to that change in the *Work*.
.2 When proceeding with a change in the *Work* under a *Change Directive*, keep accurate records of daily time sheets for labour and *Construction Equipment*, and invoices for *Product* and *Construction Equipment* costs. Submit such records to the *Consultant* weekly, until the *Change Order* superseding the *Change Directive* is issued.
.3

1.09 FEES FOR OVERHEAD AND PROFIT

.1 The *Contractor's* entitlement to a fee for overhead and profit on the *Contractor*'s expenditures and savings attributable to a change in the *Contract Price* shall be as follows, as applicable:
.1 For work performed by the *Contractor's* own forces, 10 % of the *Contractor's* net increase in costs.
.2 For work performed by a *Subcontractor*, 5 % of the sum of the *Subcontractor's* net increase in costs plus the *Subcontractor's* fee.
.2 A *Subcontractor's* entitlement to a fee for overhead and profit on the Subcontractor's expenditures and savings attributable to a change in the *Contract Price* shall be as follows, as applicable:
.1 For work performed by the Subcontractor's own forces, 5 % of the *Subcontractor's* net increase in costs.
.2 For work performed by a Sub-subcontractor, 5% of the sum of the Sub-subcontractor's net increase in costs plus the Sub-subcontractor's fee.
.3 Where a *Change Directive* results in net savings on account of work not required to be performed and a net decrease in the *Contractor*'s or *Subcontractor's* cost,

the net savings to the *Contractor* or *Subcontractor* shall be calculated without any adjustment for fees for overhead and profit.

.4 When a *Change Directive* is ultimately recorded as a *Change Order*, there shall be no additional entitlement to fees for overhead and profit beyond those specified in this article.

1.10 SUPPLEMENTAL INSTRUCTIONS

.1 The *Consultant* may issue *Supplemental Instructions* to provide clarifications to the *Contract Documents,* provide additional information, or make minor variations in the Work not involving adjustment in the *Contract Price* or C*ontract Time.*

.2 If the *Contractor* considers a *Supplemental Instruction* to require an adjustment in *Contract Price* or *Contract Time*, the *Contractor* shall promptly notify the *Consultant* and the *Owner* in writing and shall not proceed with any work related to the *Supplemental Instruction* pending receipt of a *Change Order*, a *Change Directive*, or, in accordance with the dispute resolution provisions of the General Conditions of *Contract*, a *Notice in Writing* of a dispute and instructions to proceed.

END OF SECTION 01 26 00

SECTION 01 29 00
PAYMENT PROCEDURES

PART 1 GENERAL

1.01 SECTION INCLUDES

.1 Procedures for the preparation and submission of applications for payment .

1.02 RELATED REQUIREMENTS

.1 This section is used to expand on the payment provisions provided in the General Conditions of the Contract. For further information on application for payment refer to Part 5 of the CCDC 2 - 2020

CCDC 2 - 2020

1.03 SCHEDULE OF VALUES

.1 Fifteen (15) calendar days prior to the first application for payment, submit for *Consultant*'s review an initial schedule of values. Modify the initial schedule of values if and as requested by *Consultant*. Obtain *Consultant's* written acceptance of the initial schedule of values prior to the first application for payment.

.2 The breakdown shall be organized consistent with the list of contents of the specifications and shall be in sufficient detail to identify major equipment items, and labour for different activities, to the *Consultant's* satisfaction.

.3 Together with the first and all subsequent applications for payment, submit updated versions of the schedule of values to indicate the values, to the date of application for payment, of work performed and Products delivered to Place of the Work.

.4 Provide the schedule of values in an electronic spreadsheet format based on the format provided and content described in latest edition of CCDC 24 – A Guide to Model Forms and Support Documents

.1 The schedule of values should provide a work breakdown that is sufficiently detailed and comprehensive to facility *Consultant's* evaluation of applications for payment at an appropriate level of detail.

.2 At all subsequent applications for payment, resubmit the schedule of values and include provisions for approved *Change Orders*, as well as allowances, unit price work, and assignable contracts as applicable, so that the breakdown amounts indicated in the schedule of values aggregate to the current total *Contract Price*. Also provide for indicating the estimated value of *Change Directives* within the schdule of values, separately from the current total *Contract Price.*

1.04 CASH FLOW PROJECTION

.1 Prior to the first application for payment submit, for *Consultant's* review, a forecast of approximate monthly progress payments for each month of the *Contract Time.*

.2 Submit revised cash flow forecasts when required due to significant changes in the rate of progress of the Work or significant changes in the Contract Price and when requested by the Consultant

1.05 STATUTORY DECLARATIONS

.1 Submit a statutory declaration in the form of CCDC 9A – Statutory Declaration of Progress Payment Distribution by *Contractor* with each application for payment following the first application for payment.

END OF SECTION 01 29 00

SECTION 01 31 19
PROJECT MEETINGS

1.01 PRE-CONSTRUCTION MEETING

.1 Meeting Set-Up:

.1 Prior to signing of the *Contract*, the *Consultant* will request a meeting to discuss and resolve administrative procedures and responsibilities.

.2 Representatives of the *Consultant*, *Owner*, *Contractor* and major *Subcontractors* shall attend.

.3 Time and location shall be established by the *Consultant* and concerned parties will be notified at least five (5) days prior to the date of the meeting.

.2 Agenda: The meeting will cover, but is not necessarily limited to, the following:

.1 Appointment of official representatives of parties involved with the project.
.2 Appointment of testing and inspection agencies.
.3 Contract Documents for construction purposes
.4 Contractor's use of premises.
.5 Schedule of the *Work*
.6 Schedules of submittals.
.7 Owner-Supplied Products if applicable
.8 Assignable contracts if applicable.
.9 Work restrictions
.10 Cash Allowances if applicable
.11 Requirements for temporary facilities and controls.
.12 Procedures for changes to the contract.
.13 Procedures for monthly progress claims.
.14 As-build drawings and maintenance manuals.
.15 Take-over procedures, acceptance, warranties.
.16 Insurance, transcript of policies.
.17 Site Security
.18 Other items of concern by involved parties.

.3 The *Consultant* shall record minutes of meeting and circulate copies to all parties present within five (5) days of meeting.

.4 All mutually agreed variations from *Bid Documents* shall be incorporated prior to signing of the *Contract*.

1.02 SITE MOBILIZATION MEETING

.1 Promptly after *Contract* award, and prior to the *Contractor* starting the *Work*, the *Contractor* shall establish the time and location of a site mobilization meeting to review and discuss administrative procedures and responsibilities. The *Contractor* shall notify the concerned parties at least five (5) Working Days before the meeting. Attendance by:

.1 The *Owner*
.2 The *Contractor*
.3 The *Consultant*
.4 Specialized *Sub-Consultants*
.5 *Subcontractors* as and when appropriate to the *Work.*

.2 Agenda: The meeting will cover, but is not necessarily limited to, the following:

.1 Use of the premises by *Subcontractors.*
.2 Construction facilities and controls.
.3 Temporary facilities
.4 Survey and building layout.
.5 *Construction Document*s to be kept at the site.
.6 Security and housekeeping procedures.
.7 Health and safety procedures.
.8 Construction progress schedule, including long lead time items.
.9 Submittals schedule and procedures
.10 Application for payment procedures
.11 Procedures for testing
.12 Procedures for maintaining record documents.
.13 Requirements for start-up of equipment
.14 Inspection and acceptance of equipment put into service during the construction period.
.15 Other items of concern by involved parties.

.3 The *Contractor* will record minutes and distribute, within five (5) Working Days, copies to meeting participants and affected parties not in attendance.

1.03 PROGRESS MEETINGS

.1 The *Contractor* shall arrange bi-weekly job meetings on a day and time acceptable to the *Consultant*. Notify all parties concerned, including *Subcontractors* as and when appropriate to the progress of the *Work*, 48 hours prior to time of meeting.

.2 The *Contractor* shall arrange for and provide physical space for meetings, this space can be on site if adequate space is available.

.3 On that day, representatives of above noted *Subcontractor* shall meet at the space of the meeting of the *Contractor* and report the condition of the work under the *Subcontractor*'s charge.

.4 Each representative shall be empowered by each Subcontractor to make definite decisions regarding all matters pertaining to Work under this Contract.

.5 The *Contractor* shall record minutes and circulate copies to all attending parties, and affected parties not in attendance, within three (3) Working Days after each meeting.

.6 Agenda: Each meeting will cover, but not necessarily be limited to, the following:

.1 Review and approval of previous meeting minutes.
.2 Other items of concern by involved parties.
.3 Review of work progress since previous meeting.
.4 Field observations, problems, conflicts.
.5 Construction Schedule:
.1 Problems which impeded schedule
.2 Corrective measures required to maintain schedule
.3 Revisions to Schedule
.6 Review of off-site fabrications, delivery schedules
.7 Proposed progress - schedule during succeeding work period.
.8 Review of submittal schedule
.9 Maintenance of quality standards.

.10 Pending changes in the Work and substitutions
  .1 Effect on construction schedule.
  .2 Effect on other contracts of the project.
.11 Requests for information
.12 Site Safety Issues
.13 Other items of concern by involved parties.

END OF SECTION 01 31 19

This page intentionally left blank

SECTION 01 32 13
CONSTRUCTION PROGRESS DOCUMENTATION

1.01 RELATED REQUIREMENTS

.1 Refer to General and Supplementary Conditions of the Contract, CCDC 2 - 2020

1.02 SUMMARY

.1 This Section specifies *Contractor's* responsibilities for preparation and submission of schedules and other documentation related to tracking construction progress.

.2 The purpose of submitting progress schedules is to:

.1 Inform *Owner* and *Consultant* of actual progress versus planned progress, and

.2 provide assurance that scheduling issues are being proactively identified and addressed in a timely manner, and that planned progress is being maintained as closely as possible.

1.03 CONSTRUCTION PROGRESS SCHEDULE

.1 Provide a work breakdown structure identifying key work activities, work packages, and major Project milestons, including long delivery *Products*, inspection and testing activities, preparation and review of mock-ups, shutdown or closure activities, demonstration and training activities, and if applicable the delivery of *Owner* supplied *Products*, *Owner* performed work, and *Owner* decisions for cash allowances. The breakdown should be to a sufficient level of detail to effectively manage construction progress.

.2 Format:

.1 Prepare schedules in the form of Critical Path Method (CPM) Gantt chart.

.2 Provide horizontal time scale identifying the first day of each week.

.3 Identification of listings within the chart to be by *Specification* subjects and ordered according to NMS (National Master Specification) numbering.

.4 Provide a separate bar for each trade, operation or product as required.

.5 Indicate key milestone dates as identified in the *Bid Documents* including *Substantial Performance of the Work*, and if applicable *Ready-for-Takeover*.

.3 Submission procedures:

.1 Submit schedule electronically to the *Owner* and *Consultant* via e-mail as a .pdf formatted file.

.2 If applicable in the *Bid Documents*, submit the initial construction progress schedule alongside *Bid Submission* as required in Section 00 21 13 - Instructions to Bidders

.3 If an initial construction progress schedule is required within the *Bid Submission,* resubmit the same schedule within ten (10) Working Days after award of the *Contract*. If there are any changes from the initial schedule in the *Bid Submission*, provide an account for those changes.

.4 The *Consultant* will review format and content of the initial construction progress schedule and return the schedule with request necessary

changes, if any, within ten (10) Working Days after receipt.

.5 Resubmit the finalized schedule within five (5) *Working Days* after return of the review copy.

.6 Distribute copies of the reviewed schedule to:

.1 Job site office.

.2 *Subcontractors.*

.3 Other concerned parties.

.7 Instruct recipients to report to the *Contractor,* within seven (7) days, any problem anticipated by the timetable shown in the schedule.

.8 The finalized construction progress schedule accepted by the *Consultant* shall become the baseline construction progress schedule and shall be used as the baseline for updates.

.9 Submit an updated progress schedule with each application for payment, to *Owner* and *Consultant*, indicating actual and project start and finish dates with report date line and progress.

1.04 SUBMITTALS SCHEDULE

.1 Prepare schedule identifying all required *Shop Drawing*, *Product* data, sample submissions, and other items required for review, including samples required for testing and including those for *Owner* supplied *Products*.

.2 The *Contractor* shall coordinate all sub-trades, suppliers and manufacturers to ensure that all required *Shop Drawings*, samples, *Product* data and other items required for review are scheduled so as to provide sufficient time for review by *Consultant.*

.3 Format:

.1 Prepare schedule in a electronic .format, in the form of a Gantt Chart

.2 Provide a separate line for each required submittal, organized by Specifications section name and order by NMS (national master spec) numbers. Further break down lines by individual Products and systems as required.

.3 For each required submittal, show planned earliest date for initial submittal, earliest date for return of reviewed submittal by *Consultant* and latest date for return of reviewed submittal without causing delay.

.4 Allow time in schedule for resubmission of submittals, should resubmission be necessary.

.4 Submission Procedure:

.1 Submit schedule electronically to the *Owner* and *Consultant* via e-mail as a .pdf formatted file.

.2 Submit the initial submittals schedule within ten (10) Working Days after award of the *Contract*.

.3 The *Consultant* will review format and content of the initial submittals schedule and return the schedule with request necessary changes, if any, within ten (10) *Working Days* after receipt.

.4 Resubmit the finalized schedule within five (5) *Working Days* after return of the review copy.

.5 The finalised Submittals schedule reviewed and accepted by the Consultant shall become the baseline submittals schedule for the Project,

and shall be the baseline for updates.

.5 It will be the *Contractor*'s responsibility to contact and corrdinate all necessary *Subcontractors,Suppliers* and *Manufacturers* to inform them when their submissions will be required.

.6 Refer to Section 01 33 00 - Submittal Procedures for further information regarding the requirements of the *Submittals Schedule.*

1.05 SCHEDULE MANAGEMENT

.1 At each regular progress meeting, review and discuss current construction progress and submittals schedules with *Consultant* and *Owner,* including activities that are behind schedule and planned measures to regain schedule slippage in key areas on or near the critical path.

.2 Activities considered behind schedules are those with start or completion dates later than the dates shown on the baseline schedules.

.3 Include the complete sequence of construction activities.

.4 Include dates of commencement and completion of each major element of construction, including, but not limited to the following:

.1 Site clearing.
.2 Site utilities.
.3 Foundation work.
.4 Masonry work.
.5 Structural framing.
.6 Specialty subcontractor work.
.7 Equipment installations.
.8 Finishes.

.5 Show the projected percentage of completion for each item as of the first day of each month.

.6 Indicate the progress of each activity to the date of submission of the schedule.

.7 Show major changes occurring since the previous submission of the schedule.

.1 Major changes in scope.
.2 Activities modified since the previous submission.
.3 Revised projections of progress and completion.
.4 Other identifiable changes.

.8 Provide a narrative report to define:

.1 Problem areas, anticipated delays, and impact on schedule.
.2 Corrective action recommended and its effect.

1.06 RECORDING ACTUAL SITE CONDITIONS ON AS-BUILT DRAWINGS

.1 Obtain a hard copy, or electronic copy, of the construction Drawings from the Consultant for the purpose of creating as-built drawings. Record information in electronic or analogue form.

.2 As-built drawings shall clearly identity as-built deviations from the originally obtained construction Drawings.

.3 If a hard copy is being used to record information, maintain as-built drawings in a clean, dry and legible condition.

.4 Clearly label each drawing as 'AS-BUILT DRAWING'. Record information concurrently with construction progress. Do not conceal Work until required information is recorded.

.5 Record actual construction including:

.1 Measured depths of elements of foundation in relation to finish first floor datum.

.2 Measured horizontal and vertical location sof underground utilities and appurtenances, referenced to permanent surface improvements.

.3 Measure locations of pipes, ducts, conduits, outlets, fixtures, access panels, and appurtenances, reference to visible and accessiblle features of construction.

.4 Field changes of dimension and detail.

.5 Changes made by *Change Orders*, *Change Directives* and *Supplemental Instructions*.

.6 References to *Shop Drawings*, where *Shop Drawings* show more detail.

.6 Do not use as-built drawings for construction purposes.

1.07 PROGRESS PHOTOGRAPHS

.1 Arrange for periodic digital photography to document and provide a photographic record of the progress of the *Work*.

.2 As required by *Owner*, arrange for final photographs to be taken by a professional photographer.

.3 Identify each photograph by project name, project number and date taken.

.4 Submission:

.1 Submit to the *Consultant* and *Owner* a set of minimum 24 photographs or whatever quantity is necessary to show the extent of the progress of the work, on a bi-weekly (every other week) basis.

.2 Submit .jpg minimum 300 DPI resolution files electronical via email submission.

.3 Submit progress photographs at completion of excavation, foundation, and framing and services before concealment

.5 Do not use progress or any other *Project* photographs for promotional purposes without the *Owner*'s written consent.

1.08 PROGRESS VIDEO

.1 Where required in the *Contract Documents*, provide internet-capable camera with active web access, allowing off-site viewing of Place of the Work 24/7. Submit web access and security access codes to Owner and Consultant.

END OF SECTION 01 32 13

SECTION 01 33 00
SUBMITTAL PROCEDURES

1.01 ADMINISTRATION

.1 Submit specified submittals to *Consultant* for review. Submit with reasonable promptness and in orderly sequence so as to not cause delay in the *Work*. Failure to submit in ample time is not considered sufficient reason for an extension of the *Contract Time* or for *Product* substitutions or other deviations from the *Drawings* and *Specifications*.

.2 Prepare submittal schedule identifying all required *Shop Drawing*, *Product* data, sample submissions, and other items required for review, including samples required for testing and including those for *Owner* supplied *Products.*

.1 For further information regarding submittal schedule requirements, refer to Section 01 32 13 - Construction Progress Documentation

.3 Where required by authorities having jurisdiction, provide submittals to such authorities for review and approval.

.4 Do not proceed with *Work* affected by a submittal until review is complete, and approval in writing is given.

.5 Submit to the *Consultant* for review *Shop Drawings*, *Product* data and samples as specified in the respective specification Sections.

.6 Present *Shop Drawings*, *Product* data and samples in both SI metric and imperial units.

.7 Review submittals, provide verified field measurements where applicable, and affix *Contractor's* review stamp prior to submission to *Consultant*. *Contractor's* review stamp represents that necessary requirements have been determined and verified, and that the submittal has been checked and coordinated with requirements of the *Work* and *Contract Documents.*

.8 Verify field measurements and that affected adjacent work is coordinated.

.9 Submittals not meeting specified requirements will be returned without comments.

.10 Reproduction of construction *Drawings* to serve only as background for S*hop Drawings* is permitted. If construction Drawings are used for this purpose, remove all references to *Consultant.*

.11 Arrange and pay for all deliveries and pick-ups to and from the office of the *Consultant.*

.12 Do not propose *Substitutions* or deviations from *Contract Documents* via *Shop Drawing*, *Product* data and sample submittals.

1.02 SHOP DRAWINGS

.1 Refer to the General and Supplementary Conditions of the *Contract*, article GC 3.8

.2 *Drawings* to be originals prepared by the *Contractor*, *Subcontractor*, *Supplier* or *Distributor*, which illustrate the appropriate portion of the *Work*; showing fabrication, layout, setting or erection details, as specified in the appropriate Sections.

.3 Identify the content of *Shop Drawings* by reference to the applicable NMS specification Section numbers.

.4 Identify details by reference to sheet and detail numbers shown on the *Contract Drawings.*

.5 Submit two (2) hard copies of *Shop Drawings*, as well as an electronic copy via email in .pdf format, where specified in the technical *Specifications.*

.6 Where a submittal includes information not applicable to the Work, clearly identify applicable information and strike out non-applicable information.

.7 Trade Literature Format Submissions:

.1 Sheet Sizes: 215 x 280 mm.

.2 Submit: Two (2) hard copies and one (1) electronic copy in .pdf format, printed on the left side of 430mm x 280mm sheets leaving the right side clear to receive review stamps.

.8 If shop drawings are reviewed and found acceptable, two (2) signed copies and the reproducible print will be returned to the Contractor and fabrication and installation of the Work may begin.

.9 If shop drawings are unacceptable, two (2) noted copies will be returned to the Contractor. Upon correction, shop drawings shall be resubmitted following procedure above. No fabrication or installation may begin before acceptable review of shop drawings.

.10 Retain three (3) extra copies of reviewed shop drawings for incorporation into maintenance manual.

1.03 PRODUCT DATA

.1 *Product* data submittals shall include material safety data sheets (MSDS) for all controlled *Products.*

.2 Submit electronic copies of *Product* data sheets or brochures where specified in the technical *Specifications.*

.3 Certain specification *Sections* specify that manufacturer's standard schematic drawings, catalogue sheets, illustrations and other standard descriptive data will be accepted in lieu of *Shop Drawings.*

.4 The above will be accepted only if they conform to the following:

.1 Delete information which is not applicable to *Project.*

.2 Supplement standard information to provide additional information applicable to *Project.*

.3 Show dimensions and clearances required.

.4 Show performance characteristics and capacities.

.5 Show wiring diagrams (where applicable) and controls.

1.04 SAMPLES AND MOCK-UPS

.1 Submit samples for *Consultant's* or *Owner's* review in sizes and quantities specified in the technical Specifications.

.2 Samples shall be labelled as to origin, *Project* name, applicable specification number and intended use.

.3 Where colour, pattern or texture is criterion that has not been specified, submit full range of available *Products* meeting other specified requirements.

.4 Deliver samples prepaid to *Consultant's* business address.

.5 Construct field samples and mock-ups at locations acceptable to the *Consultant.*

.6 Construct each sample or mock-up complete, including work of all trades required to finish *Work*.

.7 Notify the *Consultant* in writing, at time of submission, of any deviations from the requirements of the *Contract Documents.*

.8 Consultant selection from samples is not intended to change the *Contract Price* or *Contract Time*. If a selection would affect the *Contract Price* or *Contract Time*, notify *Consultant* in writing prior to proceeding with the *Work*.

.9 Resubmit samples as required by *Consultant* to comply with *Contract Documents.*

.10 Reviewed and approved samples or mock-ups will become standards of workmanship and material against which, installed work will be checked on project.

1.05 COORDINATION OF SUBMISSIONS

.1 Review Shop Drawings,Product data and samples prior to submission. Submissions which do not include the Contractor's review stamp will be returned by the Consultant, not reviewed.

.2 Verify:

.1 Field measurements.

.2 Field construction criteria.

.3 Catalogue numbers and similar data.

.3 Coordinate each submission with the requirements of the *Work* and the *Contract Documents*. Individual *Shop Drawings* will not be reviewed until all related *Drawings* are available.

.4 Indicate *Products*, methods of construction, and attachment or anchorage, erection diagrams, connections, explanatory notes and other information necessary for completion of the *Work.*

.5 Where *Products* attach or connect to other *Products*, indicate that such items have been coordinated, regardless of Section under which adjacent items will be supplied and installed. Indicate cross-references to *Drawings*, *Specifications* and other already reviewed *Shop Drawings*.

.6 The *Contractor's* responsibility for errors and omissions in submission is not relieved by the *Consultant's* review of submittals.

.7 The *Contractor's* responsibility for deviations in submission from the requirements of the *Contract Documents* is not relieved by the *Consultant's* review of the submission, unless the *Consultant* gives written acceptance of specified deviations.

.8 Notify the *Consultant*, in writing at the time of submission, of deviations from the requirements of the *Contract Documents.*

.9 If upon *Consultant*'s review no errors or omissions are discovered, or if only minor corrections are required as indicated, submittal will be returned and fabrication or installation of *Work* may proceed.

.10 If *Shop Drawings* are reviewed and found acceptable, a signed electronic copy will be returned to the *Contractor* via email in .pdf format.

.11 If upon *Consultant's* review significant errors or omissions are discovered, a so noted copy will be returned for correction and resubmission. Do not commence fabrication or installation.

.12 If *Shop Drawings* are unacceptable, a so noted electronic copy will be returned to the *Contractor,* via email in .pdf format.

.1 *Consultant*'s notations on submittals are intended to ensure compliance with *Contract Documents* and are not intended to constitute a change in the Work requiring change to the *Contract Price* or *Contract Time*. If *Contractor* considers any *Consultant's* notation to be a change in the *Work*, promptly notify *Consultant* in writing before proceeding with the *Work.*

.13 Resubmit corrected submittals through same procedure indicated above, before any fabrication or installation of the Work proceeds. When resubmitting, notify *Consultant* in writing of any revisions other than those requested by *Consultant.*

.14 The *Consultant* reserves the right to keep submitted *Shop Drawings* for fifteen (15) *Working Days.*

.15 Originators preparing more than one submission, shall prepare a list of all *Shop Drawings*, complete with submission dates, to the *Consultant*. This list shall be included with the first submission.

.16 Three (3) printed hard copies of reviewed *Shop Drawings* shall be incorporated into maintenance manual.

1.06 SUBMISSION REQUIREMENTS

.1 Schedule submissions at least thirty (30) *Working Days* before the dates reviewed submissions will be needed, incorporate time in submittals schedule specified in Section 01 32 13 - Construction Progress Documentation.

.2 Allow ten (10) *Working Days* for *Consultant's* review of each submittal. Allow additional ten (10) *Working Days* where sub-*Consultant* or commissioning agent review is required.

.3 Accompany each submission with a transmittal letter in .pdf format containing:

.1 *Project* title and number.
.2 Applicable Specification Section NMS number.
.3 Contractor's name and address.
.4 Number of each shop drawing, product data and sample submitted.
.5 Other pertinent data.

.4 Submissions shall include:

.1 Date and revision dates.
.2 Project title and number.
.3 Name of:
.1 *Contractor.*
.2 Subcontractor.
.3 Supplier.
.4 Manufacturer.
.5 Separate detailer when pertinent.
.4 Identification of product or material.

.5 Relation to adjacent structure or materials.
.6 Field dimensions, clearly identified as such.
.7 Specification Section number.
.8 Applicable standards, such as CSA or CGSB numbers.
.9 CSA/CGSB/ASTM or other conformance certificates where applicable.
.10 Originator's stamp, on the front face of the submission initialled or signed certifying review of submission, verification of field measurements and compliance with Contract documents.
.11 Contractor's stamp, on the front face of the submission initialled or signed certifying review of submission.
.12 Professional Engineer's stamp and signature, on the front face of the submission where specific sections of the specification so direct. Note that formal drawings will not be reviewed unless the Professional Engineer's stamp and signature is present.

1.07 SHOP DRAWINGS REVIEW

.1 The review of shop drawings by the *Consultant, Sub-Consultants* and/or the *Owner* is for the sole purpose of ascertaining conformance with the general concept. These reviews shall not mean that the *Consultant* or the *Owner* approves the detail design inherent in the *Shop Drawings*, responsibility for which shall remain with the *Contractor* submitting same, and such review shall not relieve the *Contractor* of responsibility for errors or omissions in the *Shop Drawings* or of responsibility for meeting all requirements of the *Contract Documents.*

.2 Without restricting the generality of the foregoing, the *Contractor* is responsible for dimensions to be confirmed and correlated at the job site, for information that pertains solely to fabrication processes or to techniques of construction and installation and for coordination of the work of all subtrades.

END OF SECTION 01 33 00

This page intentionally left blank

SECTION 01 35 43
ENVIRONMENTAL PROCEDURES

1.01 DEFINITIONS

.1 *Environmental Pollution and Damage*: The presence of chemical, physical, biological elements or agents which adversely affect human health and welfare; unfavorably alter ecological balances of importance to human life; affect other species of importance to humankind; or degrade the environment aesthetically, culturally and/or historically.

.2 *Environmental Protection*: Prevention/control of pollution and habitat or environment disruption during construction. Control of environmental pollution and damage requires consideration of land, water, and air; biological and cultural resources; and includes management of visual aesthetics; noise; solid, chemical, gaseous, and liquid waste; radiant energy and radioactive material as well as other pollutants.

1.02 DISPOSAL OF WASTES

.1 Do not bury rubbish and waste materials on site.

.2 Do not dispose of waste or volatile materials, such as mineral spirits, oil or paint thinner into waterways, storm or sanitary sewers.

.3 Dispose of waste or volatile materials which could be hazardous to the health, in strict accordance with the requirements of all authorities having jurisdiction and in a manner which will protect construction personnel, visitors to the site and the public from all such hazards.

1.03 DEWATERING

.1 provide temporary drainage and pumping as necessary to dewater excavations, trenches, foundations, and other parts of the *Work*. Maintain such areas free of water arising from groundwater or surface run-off, as required to keep them stable, dry, and protected from damage due to flooding.

.2 Maintain standby equipment necessary to ensure continuous operation of dewatering system.

.3 Do not pump water containing suspended materials or other harmful substances into waterways, sewers or surface drainage systems. Treat or dispose of such water in accordance with applicable regulatory requirements.

1.04 SITE DRAINAGE

.1 Maintain grades to ensure proper site drainage.

.2 Prevent surface water runoff from leaving the site, except as otherwise provided by site grading and/or stormwater management plan.

.3 Prevent precipitation from infiltrating or from directly running off stockpiled materials and waste materials. Cover stockpiled materials and waste materials with an impermeable liner during periods of work stoppage including at end of each *Working Day.*

.4 Control surface drainage from cuts and fills, from borrow and waste disposal areas, from stockpiles, staging areas, and other work areas as required to prevent erosion and sedimentation.

.5 Control surface drainage by ensuring that gutters are kept open and water is not directed across or over pavements or sidewalks, except through pipes or properly constructed troughs. Ensure that runoff from unfinished areas is intercepted and diverted to suitable outlets.

1.05 SITE CLEARING AND PLANT PROTECTION

.1 Protect trees and plants on site and adjacent properties where indicated, and required by all authorities having jurisdiction.

.2 Wrap in burlap, trees and shrubs adjacent to construction work, storage areas and trucking lanes, and encase with protective wood framework from grade level to height of two [2] meters.

.3 Protect roots of designated trees to dripline during excavation and site grading to prevent disturbance or damage. Avoid unnecessary traffic, dumping and storage of materials over root zones.

.4 Minimize stripping of topsoil and vegetation.

.5 Restrict tree removal to areas indicated or designated by the *Consultant.*

1.06 WORK ADJACENT TO WATERWAYS

.1 Do not operate construction equipment in waterways.

.2 Do not use waterway beds for borrow material without the *Consultant*'s approval.

.3 Do not dump excavated fill, waste material or debris in waterways.

.4 Design and construct temporary crossings to minimize erosion to waterways.

.5 Do not skid logs or construction materials across waterways.

.6 Avoid indicated spawning beds when constructing temporary crossings of waterways.

.7 Do not blast under water or within 100 m of indicated spawning beds.

1.07 POLLUTION CONTROL

.1 Take measures to prevent contamination of soil, water, and atmosphere through uncontrolled discharge of noxious or toxic substances and other pollutants, potentially causing environmental damage.

.2 Be prepared, by maintaining appropriate materials, equipment, and trained personnel on site, to intercept, clean up, and dispose of spills or releases that may occur. Promptly notify the following in the event of spills or releases on site.

  .1 authority having jurisdiction,

  .2 person causing or having control of pollution source, if known, and

  .3 *Owner* and *Consultant.*

.3 Contact manufacturer of pollutant, if known and applicable, to obtain material safety data sheets (MSDS) and ascertain hazards involved and precautions and measures required in cleanup or mitigating actions.

.4 Maintain temporary erosion and pollution control features installed under this contract.

.5 Control emissions from equipment and plant to local authorities emission requirements.

.6 Prevent sandblasting and other extraneous materials from contaminating air beyond application area, by providing temporary enclosures.

.7 Cover or wet down dry materials and rubbish to prevent blowing dust and debris. Provide dust control for temporary roads.

.8 Clean public roads, easements etc. at the access points to the site as required to keep public roadways and easements clear of site materials and debris at all times.

.9 Take immediate action to contain and mitigate harmful effects of the spill or release.

1.08 EROSION AND SEDIMENT CONTROL

.1 Minimize amount of bare soil exposed at one time. Stabilize disturbed soils as quickly as practical to minimize erosion. Remove accumulated sediment resulting from construction activity from adjoining surfaces, drainage systems, and watercourses, and repair damage caused by soil erosion and sedimentation.

.2 Provide and maintain appropriate temporary measures such as silt fences, straw bales, ditches, geotextiles, drains, berms, terracing, riprap, temporary drainage piping, sedimentation basins, vegetative cover, dikes, and other measures that may be required to prevent erosion and migration of silt, mud, sediment, and other debris.

.3 Do not disturb existing embankments or embankment protection.

.4 Periodically inspect erosion and sediment control measures to detect evidence of erosion and sedimentation. Promptly take corrective measures when necessary.

.5 If soil and debris from site accumulate in ditches or other low areas, remove accumulation and restore area to original condition.

1.09 NOTIFICATION

.1 The *Owner* or the *Consultant* will notify the *Contractor* in writing of observed noncompliance with Federal, Provincial or Municipal environmental laws, regulations, or permits.

.2 After receipt of such notice, the *Contractor* shall inform the *Owner* and the *Consultant* of proposed corrective action and take such action for approval by the *Owner* and the *Consultant*.

.3 The *Consultant* will issue a stop work order until satisfactory corrective action has been taken.

.4 No time extensions will be granted or adjustments allowed to the *Contractor* for such suspensions.

END OF SECTION 01 35 43

This page intentionally left blank

SECTION 01 40 00
QUALITY REQUIREMENTS

PART 1 GENERAL

1.01 SECTION INCLUDES

.1 *Submittals*.
.2 Quality assurance.
.3 References and standards.
.4 Testing and inspection agencies and services.
.5 Contractor's construction-related professional design services.
.6 Contractor's design-related professional design services.
.7 Control of installation.
.8 Mock-ups.
.9 Tolerances.
.10 Manufacturers' site services.
.11 Defect Assessment.

1.02 REFERENCE STANDARDS

.1 Within the Specifications, reference may be made to the following standards in writing, testing or certification organizations by their acronyms or initialisms:
  .1 AA - Aluminum Association
  .2 ACI - American Concrete Institute
  .3 AISC - American Institute of Steel Construction
  .4 ANSI - American National Standards Institute
  .5 ASME - American Society of Mechanical Engineers
  .6 ASTM - American Society for Testing and Materials
  .7 AWMAC - Architectural Woodwork Manufacturers Association of Canada
  .8 AWPA - American Wire Producers Association
  .9 CaGBC - Canadian Green Building Council
  .10 CGSB - Canadian General Standards
  .11 CISC - Canadian Institute of Steel Construction
  .12 CPCI - Canadian Prestressed Concrete Institute
  .13 CSA - Canadian Standards Association
  .14 CSSBI - Canadian Sheet Steel Building Institute
  .15 CWB – Canadian Welding Bureau
  .16 ICEA - Insulated Cable Engineers Association
  .17 IEEE - Institute of Electrical and Electronics Engineers
  .18 IGMAC – Insulating Glass Manufacturers Association of Canada
  .19 LEED - Leadership in Energy and Environmental Design
  .20 MPP – Master Painters Institute
  .21 MSS - Manufacturers Standardization Society of the Valve and Fittings Industry
  .22 NAAMM - National Association of Architectural Metal Manufacturers
  .23 NEMA - National Electrical Manufacturers Association
  .24 NFPA - National Fire Protection Association
  .25 NHLA - National Hardwood Lumber Association
  .26 NLGA - National Lumber Grades Authority
  .27 SSPC – The Society for Protective Coatings

.28 TTMAC - Terrazzo, Tile and Marble Association of Canada
.29 ULC - Underwriters' Laboratories of Canada

1.03 DEFINITIONS

.1 *Quality Management Plan (QMP)*: *Contractor's* management plan for quality control in the execution of the *Contract* for Construction.

.2 *Professional Design Services*: Design of some aspect or portion of the *Project* by a party other than the *Consultant.* Provide these services as part of the *Contract* for *Construction.*

.1 Design services types required:

.1 Construction-Related: Services *Contractor* needs to provide in order to carry out the *Contractor's* sole responsibilities for construction means, methods, techniques, sequences, and procedures.

.2 Design-Related: Design services explicitly required to be performed by another design professional due to highly-technical and/or specialized nature of a portion of the *Project.* Services primarily involve engineering analysis, calculations, and design, and are not intended to alter the aesthetic aspects of the design.

.3 *Design Data:* Design-related, signed and sealed *Drawings,* calculations, *Specifications,* certifications, Shop Drawings and other *Submittals* provided by the *Contractor,* and prepared directly by, or under direct supervision of, appropriately licensed design professional.

.4 *Reference Standard:* means consensus standards, trade association standards, guides and other publication expressly referenced in *Contract Documents.*

1.04 CONTRACTOR'S CONSTRUCTION-RELATED PROFESSIONAL DESIGN SERVICES

.1 Coordination: *Contractor's Professional Design Services* are subject to requirements of the *Project's* construction *Contract* conditions.

.2 Provide such engineering design services as may be necessary to plan and safely conduct certain construction operations, pertaining to, but not limited to the following:

.1 Temporary sheeting, shoring, or supports.
.2 Temporary scaffolding.
.3 Temporary bracing.
.4 Temporary falsework for support of spanning or arched structures.
.5 Temporary foundation underpinning.
.6 Temporary stairs or steps required for construction access only.
.7 Temporary hoist(s) and rigging.
.8 Investigation of soil conditions and design of temporary foundations to support *Construction Equipment*.

1.05 CONTRACTOR'S DESIGN-RELATED PROFESSIONAL DESIGN SERVICES

.1 Coordination: *Contractor's Professional Design Services* are subject to requirements of the *Project's* construction *Contract* conditions.

.2 Base design on performance, design criteria or both performance and design criteria indicated in individual *Specifications* sections:

.1 Submit a Request for Information to the *Consultant* if the criteria indicated are not sufficient to perform the required design services.

.2 Design-related *Contractor's Professional Design Services* are limited to the final solution only based on performance and design criteria established by the *Consultant,* and do not include establishing performance or design criteria which are the responsibility of the *Consultant.*

.3 Provide *Professional Design Services* as specified and as required for the proper execution of the *Work* in accordance with the specified performance and design critera.

1.06 SUBMITTALS

.1 See Section 01 33 00 - Submittal Procedures for submittal procedures.

.2 Designer's Qualification Statement: Submit for the *Consultant'*s knowledge, and for *Owner's* information.

.1 Include information for each individual professional responsible for producing, or supervising production of, design-related professional services provided by the *Contractor*

.1 Full name.

.2 Professional licensure information.

.3 Statement addressing extent and depth of experience specifically relevant to design of items assigned to *Contractor*.

.4 Copy of professional insurance.

.3 Design Data: Submit for the *Consultant's* knowledge as *Contract* administrator for the limited purpose of assessing compliance with information given and the design concept expressed in the *Contract Documents*, and for the *Owner's* information.

.1 Include calculations that have been used to demonstrate compliance with the performance and regulatory criteria provided, and to determine design solutions.

.2 Include required *Product* data and *Shop Drawings.*

.3 Include a statement or certification attesting that the design data complies with the criteria indicated, such as building codes, loads, functional, and similar engineering requirements.

.4 Include the signature and seal of the design professional responsible for allocated design services on calculations and *Drawings.*

.4 Test Reports: After each test/inspection, promptly submit pdf copies of the report to the *Consultant*

.1 Include:

.1 Date issued.

.2 *Project* title and number.

.3 Name of inspector.

.4 Date and time of sampling or inspection.

.5 Identification of *Product* and *Specifications* section.

.6 Location in the *Project.*

.7 Type of test/inspection.

.8 Date of test/inspection.
.9 Results of test/inspection.
.10 Compliance with the *Contract Documents.*
.11 When requested by the *Consultant,* provide interpretation of results.

.2 Test report *Submittals* are for the *Consultant's* knowledge as *Contract* administrator for the limited purpose of assessing compliance with information given and the design concept expressed in the *Contract Documents*, and for the *Owner's* information.

.5 Certificates: When specified in individual *Specifications* sections, submit certification by the manufacturer and the *Contractor* or installation/application *Subcontractor* to the *Owner* and the *Consultant.*

.1 Indicate the material or *Product* complies with or exceeds specified requirements. Submit supporting reference data, affidavits, and certifications as appropriate.

.6 Manufacturer's Instructions: When specified in individual *Specifications* sections, submit printed instructions for delivery, storage, assembly, installation, start-up, adjusting, and finishing, for the *Owner's* information. Indicate special procedures, perimeter conditions requiring special attention, and special environmental criteria required for application or installation.

.7 Manufacturer's Site Reports: Submit reports for the *Consultant's* benefit as *Contract* administrator and for the *Owner.*

.1 Submit for information for the limited purpose of assessing compliance with information given and the design concept expressed in the *Contract Documents.*

.8 Erection Drawings: Submit *Drawings* for the *Consultant's* benefit as *Contract* administrator and for the *Owner.*

.1 Submit for information for the limited purpose of assessing compliance with information given and the design concept expressed in the *Contract Documents.*

.2 Data indicating inappropriate or unacceptable work may be subject to action by the *Consultant* or the *Owner.*

1.07 QUALITY ASSURANCE

.1 Testing Agency Qualifications:

.1 Prior to start of work, submit the agency name, address, and telephone number, and names of the certified specialist and responsible officer.

.2 Designer Qualifications: Where professional engineering design services and design data *Submittals* are specifically required of the *Contractor* by the *Contract Documents,* provide the services of a Professional Engineer experienced in design of this type of work and licensed in the Province in which the *Project* is located.

.1 Post-installation certification: After installation of work designed by Professional Engineer, provide written certification, signed by the Engineer responsible for the design that all applicable Products, systems or materials have been installed in accordance with their design.

.3 Monitor quality control over *Suppliers,* manufacturers, Product, *Services*, site conditions and workmanship to produce work of the specified quality.

.4 Comply with manufacturer's instructions, including each step in the sequence.

.5 Should manufacturer's instructions conflict with the *Contract Documents,* request clarification from the *Consultant* before proceeding.

.6 Comply with specified standards as a minimum quality for the *Work,* except where more stringent tolerances, codes or specified requirements indicate higher standards or more precise workmanship.

.7 Perform work by persons qualified to produce the required and specified quality.

.8 Wherever critical to a proper fit, verify dimensions on site prior to commencement of manufacture.

.9 Secure materials and *Product* in place with positive anchorage devices designed and sized to withstand stresses, vibration, physical distortion or disfigurement.

.10 *Contractor'sQuality Management Plan (QMP):*

.1 Prior to start of work, submit a comprehensive plan describing how *Contract* deliverables will be produced. Tailor the *QMP* to the specific requirements of the *Project*. Include the following information:

.1 Management Structure: Identify personnel responsible for quality. Include a chart showing lines of authority.

.1 Include qualifications (in resume form), duties, responsibilities of each person assigned to the *QMP* function.

.2 Management Approach: Define, describe, and include in the plan specific methodologies used in executing the *Work*.

.1 Management and control of documents and records relating to quality.

.2 Communications.

.3 Coordination procedures.

.4 Resource management.

.5 Process control.

.6 Inspection and testing procedures and scheduling.

.7 Control of noncomplying work.

.8 Tracking deficiencies from identification, through acceptable corrective action, and verification.

.9 Control of testing and measuring equipment.

.10 *Project* materials certification.

.11 Managerial continuity and flexibility.

.3 The *Owner* will not make a separate payment for providing and maintaining a *Quality Management Plan*. Include associated costs in the *Bid Price*.

.11 Quality-control personnel qualifications. Engage a person with requisite training and experience to implement and manage quality assurance (QA) and quality control (QC) for the *Project.*

1.08 REFERENCES AND STANDARDS

.1 For *Product* and workmanship specified by reference to a document or documents not included in the *Contract Documents*, also referred to as reference standards, comply with requirements of the standard, except when more rigid requirements are specified or are required by applicable codes.

.2 Comply with the reference standard of date of issue current on the date of bidding, except where a specific date is established by the applicable code.

.1 Obtain copies of standards where required by *Product Specifications* sections.

.3 Maintain a copy at the *Project* site during *Submittals*, planning, and progress of the specific work, until *Ready-For-Takeover*.

.4 Should specified reference standards conflict with the *Contract Documents,* request clarification from the *Consultant* before proceeding.

.5 Neither the contractual relationships, duties, or responsibilities of the parties in the *Contract* nor those of the *Consultant* shall be altered from the *Contract Documents* by mention or inference otherwise in any reference document.

.6 The *Owner* may employ the services of an independent testing agency to perform certain specified testing and inspection

.7 The cost of these testing and inspection services will be paid by the *Owner.* The cost of retesting and reinspection necessitated by failure to meet specified requirements on the initial test / inspection shall be paid by the *Contractor.*

.1 The employment of the testing agency in no way relieves the *Contractor* of the obligation to perform the *Work* in accordance with the requirements of the *Contract Documents*.

.2 Contractor Employed Agency:

.1 Testing Agency: Comply with requirements for standardized tests listed within CSA requirements, or described in self-recognition statement for non-standardized tests.

1.09 COORDINATION AND PROJECT CONTROL

.1 Coordinate the progress of the Work, progress schedules, submittals, the use of the site, temporary utilities, construction facilities and controls and the work of the various sections of the specifications to ensure the efficient and orderly installation of interdependent construction elements.

.2 Coordinate the work of the various sections having interdependent responsibilities for installing, connecting to and placing in service utilities and equipment.

.3 Coordinate space requirements, supports and the installation of mechanical and electrical work which is indicated schematically on the drawings. Follow the routing shown for pipes, ducts and conduits as closely as possible; place runs parallel with lines of the building. Utilize spaces efficiently to maximize accessibility for other installations, for maintenance and for repairs.

.4 Except where indicated otherwise, in finished areas, conceal pipes, ducts and wiring in floors, walls and ceilings. Coordinate locations of fixtures and outlets with finished elements. Before installation, inform the Consultant if there is a contradictory situation. Install as directed by the Consultant.

.5 Coordinate the completion and clean-up of the work of separate sections in preparation for Substantial Performance and Ready-for-Takeover

.6 After Ready-for-Takeover, and Owner occypancy of the premises, coordinate access to the site for correction of defective work and work not in accordance with the Contract Documents, to minimize disruption of the Owner's activities.

1.10 CONTROL OF INSTALLATION

.1 Monitor quality control over *Supplier*s, manufacturers, *Products*, *Services*, site conditions, and workmanship, to produce *Work* of the specified quality.

.2 Comply with manufacturers' instructions and recommendations, including each step in the sequence.

.3 Should manufacturers' instructions conflict with the *Contract Documents,* request clarification from the *Consultant* before proceeding.

.4 Comply with specified standards as minimum quality for the *Work* except where more stringent tolerances, codes, or specified requirements indicate higher standards or more precise workmanship.

.5 Have work performed by persons qualified to produce required and specified quality.

.6 Verify site measurements before fabrication and indicate on the *Shop Drawings*.

.7 Secure *Products* in place with positive anchorage devices designed and sized to withstand stresses, vibration, physical distortion, and disfigurement.

1.11 MOCK-UPS

.1 Before installing portions of the *Work* where mock-ups are required, construct mock-ups in location and size indicated for each form of construction and finish required to comply with the following requirements, using materials indicated for the completed work. The purpose of the mock-up is to demonstrate the proposed range of aesthetic effects and workmanship.

.2 Procedures for the preparation and submission of mock-ups are specified in Section 01 33 00 - Submittal Procedures

.3 Tests will be performed under the provisions identified in this section.

.4 Integrated exterior mock-ups: Construct integrated exterior mock-ups as called for in the Specifications.

.5 Coordinate the installation of exterior envelope materials and *Products* specified in other sections as required to produce mock-ups of complete assemblies. Provide adequate supporting structure for mock-up materials as necessary.

.6 Interior Mock-ups: Construct interior mock-ups as called for in the *Specifications.*

.1 Coordinate installation of materials, *Products,* and assemblies as required in *Specifications* sections; finish according to requirements.

.2 Provide required lighting, including supplemental lighting where required, to enable the *Consultant* to evaluate the quality of the mock-up.

.7 Provide supervisory personnel who will oversee mock-up construction. Execute the mock-up by the same workers that will be employed during the actual construction.

.8 Tests shall be performed under provisions identified in this section and identified in the respective *ProductSpecifications* sections.

.9 Assemble and erect specified items with specified attachment and anchorage devices, flashings, seals, and finishes.

.10 Obtain the *Consultant's* approval of mock-ups before starting work, fabrication, or construction.

.1 Make corrections as necessary until the *Consultant's* approval is issued.

.11 Accepted mock-ups shall be a standard of acceptance for the remaining Work.

.12 Where a mock-up has been accepted by the *Consultant* and is specified in the *Product Specifications* sections to be removed, protect the mock-up throughout construction. Remove the mock-up and clear the area when directed to do so by the *Consultant*.

.13 Legally salvage and recycle the demolished mock-up materials.

1.12 TOLERANCES

.1 Monitor fabrication and installation tolerance control of *Products* to produce acceptable *Work*. Do not permit tolerances to accumulate.

.2 Comply with manufacturers' tolerances. Should manufacturers' tolerances conflict with the *Contract Documents*, request clarification from the *Consultant* before proceeding.

.3 Adjust *Products* to appropriate dimensions; position before securing *Products* in place.

1.13 TESTING AND INSPECTION

.1 Refer to individual *Specifications* sections for testing and inspection requirements.

.2 Testing Agency Duties:

.1 Test samples of mixes submitted by the *Contractor.*

.2 Provide qualified personnel at the site. Cooperate with the *Contractor* in performance of services.

.3 Perform specified sampling and testing of *Products* in accordance with the specified standards.

.4 Ascertain compliance of materials and mixes with the requirements of the *Contract Documents.*

.5 Promptly notify the *Consultant* of observed irregularities or non-compliance of *Work* or *Products.*

.6 Perform additional tests and inspections required by the *Consultant*.

.7 Attend preconstruction meetings and progress meetings when invited.

.8 Submit reports of specified tests/inspections to the *Contractor,* for distribution the *Owner* and *Consultant*

.3 Limits on testing/inspection agency authority:

.1 The agency may not release, revoke, alter, or enlarge on the requirements of the *Contract Documents.*

.2 The agency may not approve or accept any portion of the *Work.*

.3 The agency may not assume any duties of *Contractor.*

.4 The agency has no authority to stop the *Work.*

.4 *Contractor* Responsibilities:

.1 Deliver to the agency at a designated location, adequate samples of materials proposed to be used that require testing, along with proposed mix designs.

.2 Provide incidental labour and facilities:

.1 To provide access to the *Work* to be tested/inspected.

.2 To obtain and handle samples at the site or at source of *Products* to be tested/inspected.

.3 To facilitate tests/inspections.

.4 To provide storage and curing of test samples.

.3 Notify the *Consultant* and laboratory 24 hours prior to the expected time for operations requiring testing/inspection services.

.4 Employ the services of an independent qualified testing laboratory and pay for additional samples, tests, and inspections required by the*Consultant* beyond the specified requirements.

.5 Arrange with the *Owner's* agency and pay for additional samples, tests, and inspections required by the *Consultant* beyond the specified requirements.

.5 Re-testing required because of non-compliance with specified requirements shall be performed by the same agency in accordance with the *Consultant's* instructions.

.6 Re-testing required because of non-compliance with specified requirements shall be paid for by the *Contractor*.

1.14 MANUFACTURERS' SITE SERVICES

.1 *Contractor's* are to ensure manufacturers' site services are provided when specified in the individual *Specifications* sections.

.1 When specified in individual specification sections, require material or *ProductSupplier*s or manufacturers to provide qualified staff personnel to observe site conditions, conditions of surfaces and installation, quality of workmanship, start-up of equipment, test, adjust, and balance equipment as applicable, and to initiate instructions when necessary.

.2 Report in writing observations and site decisions or instructions given to applicators or installers that are supplemental or contrary to manufacturers' written instructions.

1.15 DEFECT ASSESSMENT

.1 Replace work or portions of the *Work* not complying with specified requirements.

END OF SECTION 01 40 00

This page intentionally left blank

SECTION 01 41 00
REGULATORY REQUIREMENTS

1.01 SUMMARY

.1 This section references to laws, by laws, ordinances, rules, regulations, codes, orders of authorities having jurisdiction, and other legally enforceable requirements applicable to the *Work* and that are; or become, in force during performance of the *Work.*

1.02 RELATED REQUIREMENTS

.1 Section 01 40 00 - Quality Requirements.

1.03 SUMMARY OF GOVERNING BUILDING CODES AND STANDARDS

.1 CSA B651 - Accessible Design for the Built Environment 2018.

.2 NBC - National Building Code of Canada 2015.

.3 OBC - Ontario Building Code (Regulation 332/12) 2012.

1.04 REFERENCES TO REGULATORY REQUIREMENTS

.1 Perform the *Work* in accordance with the referenced building codes including amendments up to closing date; and other codes of provincial or local application provided that in case of conflict or discrepency, the more stringent requirements will prevail.

.2 Perform the *Work* in accordance with the latest edition, including all revisions, of applicable codes and regulations of federal, provincial, or local application, provided that, in any case of conflict or discrepancy, the more stringent requirements shall apply.

.3 Meet or exceed the requirements of specified standards, codes and referenced documents.

.4 Specific design and performance requirements listed in the *Specifications* or indicated on the *Drawings* may exceed minimum requirements established by the referenced building code; these requirements will govern over the minimum requirements listed in the building Code and will meet or exceed the requirements of the:

.1 *Contract Documents*;
.2 Specified standards and referenced documents.
.3 CSA B651, Accessible Design for the Built Environment.

.5 For materials, *Products* or workmanship specified by association, trade or other consensus standards, comply with the requirements of the standard, except where more rigid requirements are specified or are required by applicable codes.

.6 In each case, where a standard, code or other document is referenced, the latest edition or revision shall apply, unless specified otherwise, except where a specific date of issue is established by code.

.7 Within the Specifications, reference may be made to the following standards writing, testing or ceritification organizations by their acronym or initialisms;

.1 AA - Aluminum Association
.2 ACI - American Concrete Institution
.3 AISC - American Institute of Steel Construction
.4 ANSI - American National Standards Institute
.5 ASME - American Society of Mechanical Engineers

.6 ASTM - American Society for Testing and Materials
.7 AWMAC - Architectural Wood Manufacturers Association of Canada
.8 AWPA - American Wire Producers Association
.9 CaGBC - Canadian Green Building Council
.10 CGSB - Canadian General Standards Board
.11 CISC - Canadian Institute of Steel Construction
.12 CPCI - Canadian Prestressed Concrete Institute
.13 CSA - Canadian Standards Association
.14 CSSBI - Canadian Sheet Steel Building Institute
.15 CWB - Canadian Welding Bureau
.16 ICEA - Insulated Cable Engineers Association
.17 IEEE - Institute of Electrical and Electronics Engineers
.18 IGMAC - Insulated Glass Manufacturers of Canada
.19 LEED - Leadership in Energy and Envionmental Design
.20 MPP - Master Painters Institute
.21 MSS - Manufacturers Standardization Society of the Valve and Fittings Industry
.22 NAAMM - National Association of Architectural Metal Manufacturers
.23 NEMA - National Electrical Manufacturers Association
.24 NFPA - National Fire Protection Association
.25 NHLA - National Hardwood Lumber Association
.26 NLGA - National Lumber Grades Association
.27 SSPC - The Society for Protective Coatings
.28 TTMAC - Terrazzo, Tile and Marble Association of Canada
.29 ULC - Underwriters Laboratory of Canada

.8 Neither the contractual relationships, duties or responsibilities of the parties in the *Contract* shall be altered from those defined by the *Contract Documents* by mention or inference otherwise in any referenced document.

1.05 FIRE & SAFETY REQUIREMENTS

.1 Within five (5) working days after contract award submit a written description of the Contractor's company safety policy.

.2 General: Observe and enforce construction safety measures required by the authorities having jurisdiction, including applicable federal, provincial and municipal safety codes, laws and regulations. In event of conflict between any provisions of authorities having jurisdiction, the most stringent provision will apply.

.3 Comply with municipal regulations governing rock blasting. Schedule rock blasting with the Owner no less than 72 hours prior to commencement of blasting operations.

.4 Fire safety:

.1 Comply with all applicable fire safety codes, laws and regulations.
.2 Comply with Factory Mutual Fire Safety procedures. These procedures include using a fire permit issued by the Contractor, before and closing the same after performing any welding or work requiring an open flame.
.3 Ensure fire safety equipment is suitable for use in the event of a fire.
.4 Maintain a record of all issued and closed permits and hand over to the Owner upon completion of the Work.

.5 Safety Orientation: On the initial visit of each Subcontractor's personnel, conduct a safety orientation. Ensure that all personnel attend before commencing work.

.6 Overloading:

.1 Ensure no part of Work is subjected to a load which will endanger its safety or will cause permanent deformation.

.2 In particular, do not store materials on the structure in a manner which will cause overloading.

.7 Falsework:

.1 Design and construct falsework in accordance with CSA S269.1 - (R2021) and amendments thereto.

.2 Employ a professional structural engineer licensed to practice in the Province of the *Work* to design and supervise the erection and removal of shoring. Review the procedure with the engineer, and provide the *Consultant* with shop drawings signed and stamped by the engineer prior to commencement of the *Work*. Upon substantial performance provide *Consultant* with a certificate signed by the engineer confirming the construction was done accordance with their design.

.8 Do not employ power guns using explosives, unless expressly permitted in writing by the *Consultant*. Comply with fastening requirements of ANSI/ASSP A10.3 - 1995

.9 Comply with the requirements of the Workplace Hazardous Materials Information System (WHMIS) regarding the use, handling, storage, and disposal of hazardous materials; and regarding labelling and the provision of material safety data sheets acceptable by the Canadian Labour Code (part II)

.10 The *Contractor* shall be responsible for compliance with and administration of the above safety requirements.

.1 The *Contractor* shall have on site a copy of the latest edition of the provincial occupational health and safety handbook and the WHMIS material safety data sheets applicable to the work of each *Subcontractor*.

.2 All personnel shall be equipped with proper safety equipment to carry out their portion of the *Work*.

.11 Conflict: In event of conflict between any provisions of above authorities the most stringent provision will apply.

1.06 BUILDING SMOKING ENVIRONMENT

.1 Smoking is prohibited on the *Project* site and within the building.

1.07 PERMITS AND FEES

.1 The *Contractor* shall pay for all required permits, fees and inspections by all authorities having jurisdiction.

.2 The *Owner* will apply and pay for the Building Permit and any municipal development fees.

.3 The *Contractor* will be responsible for following up with the Municipality, to facilitate the expeditious issue of the permits.

.4 The *Contractor* shall provide the *Owner* with photocopies of all permits required for the completion of the *Work.*

.5 The *Contractor* shall obtain all necessary approvals from the Ministry of the Environment and Climate Change and the Municipality with regard to the installation of the storm and sanitary sewers and watermains and the provision of sewage holding/treatment facilities.

1.08 QUALITY ASSURANCE

.1 *Contractor's* Designer Qualifications: Refer to Section 01 40 00 - Quality Requirements.

END OF SECTION 01 41 00

SECTION 01 45 16
THERMAL IMAGING *

PART 1 GENERAL

1.01 RELATED DOCUMENTS

.1 *Drawings* and Div 01 *Specifications* sections, general and supplementary conditions of the *Contract* apply to this section.

1.02 SUMMARY OF WORK

.1 Work Included:

.1 The work of this Section includes the provision of all labour, materials, equipment and services required to conduct a complete thermal imaging survey of the building envelope as specified herein.

.2 The intention of the thermal imaging survey is to verify the integrity of the building with respect to heat loss through the building envelope.

1.03 QUALIFICATIONS

.1 For the work of this Section, employ a qualified thermal imaging specialist with at least 10 years experience in thermal imaging surveys of buildings of a type similar to that required for this *Project*.

1.04 SUBMITTALS

.1 General: Submit each item in this article according to Section 013300

.2 Submit:

.1 A complete set of thermal images covering the entire building envelope, in .jpg electronic format together with,

.2 One complete set of coloured prints, 200 mm x 250 mm size, each including a colour scale for interpretation of the actual long-wavelength thermal emissions.

.3 A report indicating interpretation and conclusion of thermal imaging results.

PART 2 PRODUCTS

2.01 EQUIPMENT

.1 Use a camera, specifically designed for thermal imaging, with high sensitivity to infra red emissions and capable of producing high definition quality colour photographs.

2.02 SOFTWARE

.1 Use a computer software program which converts the thermal-image format to .jpg images.

PART 3 EXECUTION

3.01 PREPARATION

.1 Conduct the survey when the building envelope is complete except that the exterior masonry veneer is not yet installed. Coordinate the schedule with the *Contractor* and *Consultant*.

.2 Conduct the survey at night with the ambient temperature as cold as possible, preferably during the winter months.

.3 Ensure all windows and doors are completely closed.

.4 Heat the building interior for 10 to 12 hours prior to conducting the survey, to maximize the ambient temperature difference between the interior and exterior and to allow the building fabric to warm up.

3.02 THERMAL SURVEY

.1 Photograph the entire area of the building envelope (walls and roof) from various angles.

.2 Download images from the camera and convert them to .jpg images.

.3 Select for *Submittals* the best images. Select a sufficient number of images to ensure that the entire area of the building envelope is illustrated.

.4 Include in the report explanations of the thermal imaging and related conditions such as air leakage and conductive leakage.

.5 Report on results in relation to the latest OBC SB10 compliance requirements, authorities having jurisdiction requirements, and the information shown for submitted and approved permit drawings.

END OF SECTION 01 45 16

SECTION 01 50 00
TEMPORARY FACILITIES AND CONTROLS *

1.01 TEMPORARY CONTROLS GENERAL

.1 The *Contractor* to provide basic construction facilities and temporary controls. *Subcontractors* shall provide additional facilities as required to execute their work expeditiously and in compliance with applicable regulatory requirements.

.2 Maintain temporary controls in good condition for the duration of the *Work.*

.3 Prior to *Ready-For-Takeover* or when directed by the *Consultant*, remove from the site construction facilities and temporary controls.

.4 Make good damage to or disturbance of existing property caused by such work. Restore affected existing property to a condition at least equal to that which existed prior to construction.

1.0 TEMPORARY UTILITIES

1.02 TEMPORARY UTILITIES - GENERAL

.1 Maintain strict supervision of the operation of temporary utilities to:

- .1 conform with applicable codes and standards
- .2 enforce sa
- .3 prevent abuse of services
- .4 prevent damage to finishes and completed work.

1.03 TEMPORARY ELECTRICAL POWER

.1 The *Contractor* shall provide and pay for temporary power required during construction for temporary lighting and operating of power tools.

.2 Arrange for temporary connection with appropriate utility company. Pay all costs for installation, maintenance and removal. review lease to see Landlord's responsibility in providing access to temporary power.

.3 Connect to delivery points in accordance with the Canadian Electrical Code and to the satisfaction of the local authority having jurisdiction. Provide all equipment and temporary lines to bring power services to the point of use. Provide flexible power cords as required.

.4 The existing or permanent power system of the building may not be used during construction without the permission of the *Owner.* If the existing or permanent power system is used to provide power during construction, *Contractor* shall:

- .1 Pay utility costs resulting from the use of permanent systems
- .2 Operate systems in a non-wasteful and energy efficient manner. Be responsible for any system damage.
- .3 Ensure that systems manufacturer's warranties do not commence until the date of *Ready-for-takeover*, or *Substantial Performance of the Work* or if manufacturer's warranties do commence earlier when systems are put into use, arrange for necessary extension of manufacturer's warranties or provide equivalent coverage under *Contractor's* warranty.

1.04 TEMPORARY LIGHTING

.1 The *Contractor* shall provide and maintain general level temporary lighting for construction operations to achieve a minimum lighting level of 2 watts/sq.ft. (21 watts/m2).

.2 *Contractor* shall provide and pay for additional temporary lighting equipment required for the proper execution of specific tasks. Provide branch wiring from the power source to distribution boxes with lighting conductors, pigtails and lamps, as required.

.3 The *Contractor* shall provide and maintain temporary lighting to interior and exterior staging and storage areas, after dark, for security purposes.

.4 Subject to the approval of the *Owner,* the existing or permanent lighting system of the building may be used during construction, provided warranties are not affected. If existing or permanent lighting systems is used during construction, the *Contractor* shall:

.1 Pay utility costs resulting from the use of systems

.2 Operate systems in a non-wasteful and energy efficient manner. Be responsible for any system damage.

.3 Ensure that systems manufacturer's warranties do not commence until the date of *Ready-For-Takeover,* or if manufacturer's warranties do commence earlier when systems are put into use, arrange for necessary extension of manufacturer's warranties or provide equivalent coverage under Contractor's warranty.

.4 Prior to *Ready-For-Takeover* replace all lamps which have been used for more than three [3] months.

1.05 TEMPORARY HEATING

.1 The *Contractor* shall provide temporary heating required during the construction period, including attendance, maintenance and fuel, as required to maintain temperatures of minimum 10 deg.C in interior areas where construction is in progress.

.1 Subject to the approval of the *Owner*, the existing or permanent heating system of the building, or portions thereof, may be used when available, provided warranties are not affected. If existing or permanent heating systems are used during construction, the *Contractor* shall

.1 Pay utility costs resulting from the use of systems.

.2 Be responsible for damage to the equipment.

.3 Before *Ready-For-Takeover* change all filters, vacuum all ductwork, replace worn or consumed parts and perform such other maintenance work as required to leave the system in proper operating condition.

.4 Prior to operation of new permanent equipment for temporary heating purposes, verify that the installation is approved for operation, equipment is lubricated, and filters are in place.

.2 The *Contractor* shall provide and pay for additional heating where required in order to:

.1 Facilitate progress of *Work*

.2 Protect the *Work* against dampness and cold.

.3 Prevent moisture condensation on on surfaces, freezing, or other damage to finishes or stored *Products*.
.4 Maintain specified minimum ambient temperatures and humidity levels for storage, installation and curing of *Products.*

.3 Construction heaters used inside the building must be vented to the outside or be flameless type, in order to keep the area free of exhaust or combustion gases. Solid fuel salamanders are not permitted.

1.06 TEMPORARY VENTILATION

.1 Ventilate enclosed areas as required to:
.1 Prevent accumulation of fumes, exhaust, vapours, gases and other hazardous, noxious or volatile substances in enclosed spaces and/or *Owner* occupied spaces, as required to maintain a safe working environment meeting applicable regulatory requirements.
.2 Cure materials and to dissipate humidity.
.3 Ventilate temporary sanitary facilities

.2 The existing or permanent ventilation system of the building may be used, subject to the same provisions as specified above for the use of the permanent heating system and provided such use does not result in contamination of the air outside the area of construction. If used during construction:
.1 *Contractor* shall pay utility costs resulting from the use of permanent systems.
.2 Operate systems in a non-wasteful and energy efficient manner. Be responsible for any system damage.
.3 Prior to *Ready-For-Takeover,* completely clean the building ventilation system, replace filters and perform other required maintenance to ensure systems are in and near as new condition as possible.
.4 Extend and supplement the permanent equipment with temporary fan units as required to maintain clean air for construction operations.
.5 Ensure that systems manufacturer's warranties do not commence until the date of *Ready-For-Takeover*, as agreed between *Owner* and systems manufacturer. If manufacturer's warranties do commence earlier when systems are put into use, arrange for necessary extension of manufacturer's warranties or provide equivalent coverage under the *Contractor*'s warranty.

1.07 TEMPORARY WATER SERVICE

.1 The *Contractor* shall provide and pay for temporary water service, including potable water, required for construction use. Connect to delivery points to the approval of the authorities having jurisdiction.
.1 Where no water connection is yet available, pay all costs associated with trucking water.

.2 Provide all equipment and temporary lines to bring water to the point of use. Provide flexible hoses as required.

.3 Arrange and pay for necessary water supply connections and disconnections.

.4 The existing or permanent water system of the building may be used, subject to existing available volume and pressure. *Contractor* to reimburse *Owner* at

prevailing rates.

2.0 TEMPORARY CONSTRUCTION FACILITIES

2.01 CONSTRUCTION FACILITIES - GENERAL

.1 Provide temporary construction facilities as necessary for performance of the *Work* and in compliance with applicable regulatory requirements.

.2 Maintain temporary construction facilities in good condition for the duration of the *Work.*

.3 Remove temporary construction facilities from *Place of the Work* when no longer required.

.4 The *Contractor* shall confine *Construction Equipmen*t, *Temporary Work*, storage of *Products*, waste products and debris, and operations of employees and *Subcontractors* to limits indicated by laws, ordinances, permits or the *Contract Documents* and shall not unreasonably encumber the *Place of the Work*.

2.02 CONSTRUCTION PARKING AND SITE ACCESS

.1 Limited parking will be permitted at the *Place of the Work* provided it does not disrupt the performance of the *Work*, or in the case of partial continued occupancy by *Owner* or *Owner'*s tenants, it does not disrupt the continuing operation of the facility.

.2 Provide and maintain adequate access to the *Place of the Work.*

.3 Build and maintain temporary access roads as required or where indicated on *Drawings.*

.4 Existing roads at *Place of the Work* may be used for access to *Place of the Work* provided *Contractor* assumes responsibility for any damage caused by construction traffic, and prevents or promptly cleans up any mud tracking or material spillage.

.5 Clean roads, easements and ground surfaces where used by the *Contractor's* equipment.

2.03 SITE STORAGE/LOADING

.1 Do not unreasonably encumber site with materials or equipment.

.2 Do not permit any part of the *Work* to be loaded with a weight or force which will endanger the safety of the *Work* or cause undue deflection.

.3 Confine work and operations of employees to the area designated in the *Contract Documents*.

.4 Obtain and pay for use of additional storage or work areas if needed for operations.

.5 Provide and maintain, in clean and orderly condition, lockable weatherproof sheds for storage of tools, equipment and materials as required.

.6 Locate materials not required to be stored in weatherproof sheds on site in a manner that will cause the least interference with work activities.

.7 Do not unreasonably encumber the premises with *Products*. Move stored materials or equipment when directed by the *Consultant*.

.8 Do not permit any part of the *Work* to be loaded with a weight or force which will endanger the safety of the *Work* or cause undue deflection.

2.04 SITE OFFICES

.1 The *Contractor* shall provide office space of sufficient size to accommodate site meetings.

.1 Office space shall have a lockable door.

.2 Maintain a temperature of 22°C. Provide adequate ventilation in winter and air conditioning in summer.

.3 Maintain a minimum lighting level of 750 lx.

.4 As a minimum, furnish the following:

.1 A drawing laydown table

.2 A filing cabinet

.3 A table of sufficient size to accommodate meeting attendees, complete with chairs.

.4 A coat rack and shelf.

.2 Provide a marked and fully stocked first-aid case in a readily available location.

.3 Maintain in clean condition.

2.05 TELEPHONE AND COMPUTER & PRINTER:

.1 The *Contractor* shall provide telephone, computer with internet connection and printer capable of printing 11" x 17" format for own use and the use of the *Consultant*. These facilities may be used by *Subcontractors*, subject to the *Contractor's* approval.

.2 The cost of long distance telephone calls shall be paid for by the respective party.

2.06 SANITARY FACILITIES

.1 *Contractor* shall provide sufficient temporary sanitary facilities for construction personnel.

.2 Maintain the facilities in a clean and sanitary condition and fully stocked wtih necessary supplies.

.3 Post notices and take such precautions as required by local health authorities.

.4 Do not use permanent washroom facilities during construction.

2.07 ELEVATORS

.1 Permanent elevators may be used by construction personnel and for transporting Products, at Contractor's option. If used during construction:

.1 Provide protective coverings for finish surfaces of cars and entrances.

.2 Just prior to *Ready-For-Takeover*, perform required maintenance to ensure elevators are in as near to new condition as possible.

.3 Ensure that elevator manufacturer's warranty does not commence until the date of *Ready-For-Takeover* if manufacturer's warranty does commence earlier when elevators are put into use, arrange for necessary extension of manufacturer's warranty or provide equivalent coverage under *Contractor's* warranty.

2.08 PROJECT IDENTIFICATION SIGNAGE

.1 The *Owner* will provide temporary *Project* identification signage.

.2 No other signs or advertisements, other than safety warning or directional signs as required by law are permitted without the *Owner's* and *Consultant 's* prior permission.

2.09 FIRE PROTECTION

.1 Provide and maintain temporary fire protection systems and equiment during construction.

2.10 SCAFFOLDING

.1 Erect scaffolding in accordance with CSA S269.2.

.2 Provide and maintain scaffolding, ramps, ladders, swing staging, platforms, and temporary stairs as required for the execution of the *Work*.

2.11 HOISTING

.1 Provide, operate and maintain hoists and cranes required for moving of workers, materials and equipment. Make financial arrangements with *Contractors* for their use of hoists.

.2 Hoists and cranes to be operated by qualified operators licensed in the Province of the *Work*.

3.0 TEMPORARY BARRIERS AND ENCLOSURES

3.01 TEMPORARY BARRIERS AND ENCLOSURES - GENERAL

.1 Provide temporary barriers and enclosures necessary to protect the public, including if applicable building occupants, and to secure the *Place of the Work* during performance of the *Work.*

.2 Comply with all applicable regulatory requirements.

.3 Maintain temporary barriers and enclosures in good condition for the duration of the *Work.*

.4 Ensure emergency access for for emergency services such as ambulance and fire fighting is maintained and not blocked off

.5 Remove temporary barriers and enclosures from *Place of the Work* when no longer required.

3.02 WEATHER ENCLOSURES

.1 Provide weathertight enclosures to unfinished door and window openings, tops of shafts and other openings in floors and roofs.

.2 Provide weather enclosures to protect floor area where walls are not finishes and to enclose work areas that require temporary heating.

.3 Design weather enclosures to withstand wind pressure and snow loading requirements.

.4 Enclose the building interior work area for temporary heat.

3.03 SITE ENCLOSURE & FENCING

.1 Provide and maintain a temporary enclosure around the designated staging area, using minimum 2400 mm high modular steel fencing, subject to applicable regulatory requirements.

.2 Locate where indicated on the *Drawings* and include a lockable vehicle gate and a lockable pedestrian gate as required to facilitate construction access.

.3 Maintain site fencing in good repair until removed.

4.0 TEMPORARY CONTROLS

4.01 TEMPORARY CONTROLS - GENERAL

.1 Provide temporary controls as necessary for performance of the *Work* and in compliance with applicable regulatory requirements.

.2 Maintain temporary controls in good condition for the duration of the *Work.*

.3 Remove temporary controls and *Construction Equipment* used to provide temporary controls from *Place of the Work* when no longer required.

4.02 SECURITY

.1 The *Contractor* shall provide security and facilities as required to protect the *Work* from unauthorized entry, vandalism or theft.

4.03 DUST AND PARTICULATE CONTROL

.1 Implement and maintain dust and particulate control measures in accordance with applicable regulatory requirements.

.2 Execute *Work* by methods that minimize dust from construction operations and spreading of dust on site or to adjacent properties.

.3 Provide dust-tight screens or partitions to localize dust generating activities, and for the protection of workers, finished areas of work and from contaminating air beyond immediate work area, including public areas.

.4 Provide temporary enclosures to prevent extraneous materials resulting from sandblasting or other similar operations from contaminating air beyond immediate work area.

.5 Cover or wet down dry materials and rubbish to prevent blowing dust and debris. Provide dust control for temporary roads.

.6 Use appropriate covers on trucks hauling fine, dusty or loose materials.

.7 Maintain and relocate protection until such work is complete.

4.04 PROTECTION OF INSTALLED WORK

.1 Protect installed work and provide special protection where specified in individual *Specifications* sections.

.2 Provide temporary and removable protection for installed *Products*. Control activity in the immediate work area to prevent damage.

.3 Provide protective coverings at walls, projections, jambs, sills, openings and soffits of openings.

.4 Protect finished floors, stairs and other surfaces from traffic, dirt, wear, damage or movement of heavy objects by covering with durable sheet materials.

.5 Prohibit traffic from landscaped areas.

.6 Provide a marked and fully stocked first-aid case in a readily available location.

4.05 PROJECT CLEANLINESS

.1 Maintain the *Work* in tidy condition, free from accumulation of waste products and debris.

.2 Remove debris and rubbish from pipe chases, plenums attics, crawl spaces or other closed or remote spaces.

.3 Broom and vacuum clean interior areas prior to the start of finish work; maintain areas free of dust and other contaminants during finishing operations.

.4 Remove waste material and debris from site and deposit in a designated waste container at the end of each *Working Day.*

.5 Open free-fall chutes are not permitted. Terminate closed chutes into appropriate containers with lids.

END OF SECTION 01 50 00

SECTION 01 57 19
TEMPORARY ENVIRONMENTAL CONTROLS

1.01 RELATED DOCUMENTS:

.1 Drawings and general provisions of the Contract, including General and Supplementary Conditions and Division 01 Specifications sections, apply to this section

1.02 SECTION INCLUDES

.1 Construction procedures to promote adequate indoor air quality after construction.

.2 Building flush-out after construction and before occupancy.

.3 Testing indoor air quality before commencement of construction; existing building areas only.

.4 Testing indoor air quality after completion of construction.

.5 Testing air change effectiveness after completion of construction.

1.03 PROJECT GOALS

.1 Dust and Airborne Particulates: Prevent deposition of dust and other particulates in HVAC ducts and equipment.

- .1 Cleaning of ductwork is not contemplated under this *Contract*.
- .2 The *Contractor* shall bear the cost of cleaning required due to failure to protect ducts and equipment from construction dust.
- .3 Establish condition of existing ducts and equipment prior to start of alterations.

.2 Airborne Contaminants: Procedures and *Products* have been specified to minimize indoor air pollutants.

- .1 Provide *Products* meeting the *Specifications.*
- .2 Avoid construction practices that could result in contamination of installed Products leading to indoor air pollution.

1.04 REFERENCE STANDARDS

.1 ASHRAE Std 52.2 - Method of Testing General Ventilation Air-Cleaning Devices for Removal Efficiency by Particle Size 2017.

.2 ASHRAE Std 129 - Measuring Air-Change Effectiveness. 1997 (Reaffirmed 2002).

.3 ASTM D5197 - Standard Test Method for Determination of Formaldehyde and Other Carbonyl Compounds in Air (Active Sampler Methodology) 2021.

.4 CAL (CDPH SM) - Standard Method for the Testing and Evaluation of Volatile Organic Chemical Emissions From Indoor Sources Using Environmental Chambers 2017, v1.2.

.5 EPA 600/4-90/010 - Compendium of Methods for the Determination of Air Pollutants in Indoor Air 1990.

.6 EPA 625/R-96/010b - Compendium of Methods for the Determination of Toxic Organic Compounds in Ambient Air 1999.

.7 SMACNA (OCC) - IAQ Guidelines for Occupied Buildings Under Construction 2007.

1.05 DEFINITIONS

.1 *Absorptive Materials:* Gypsum board, acoustical ceiling tile and panels, carpet and carpet tile, fabrics, fibrous insulation, and other similar *Product*s.

.2 *Contaminants:* Gases, vapours, regulated pollutants, airborne mold and mildew, and the like, as specified.

.3 *Particulates:* Dust, dirt, and other airborne solid matter.

.4 *Wet Work:* Concrete, plaster, coatings, and other *Product*s that emit water vapour or volatile organic compounds during installation, drying, or curing.

1.06 QUALITY ASSURANCE

.1 Testing and Inspection Agency Qualifications: Independent testing agency having minimum of five (5) years experience in performing the types of testing specified.

1.07 CONSTRUCTION PROCEDURES

.1 Prevent the absorption of moisture and humidity by absorptive materials by:

.1 Sequencing the delivery of such materials so that they are not present in the building until *Wet Work* is completed and dry.

.2 Delivery and storage of such materials in fully sealed moisture-impermeable packaging.

.3 Provide sufficient ventilation for drying within the required time frame.

.2 Begin construction ventilation when building is substantially enclosed.

.3 If extremely dusty or dirty work must be conducted inside the building, shut down HVAC systems for the duration; remove dust and dirt completely before restarting systems.

.4 When working in a portion of an occupied building, prevent movement of air from the construction area to the occupied area.

.5 Subject to the approval of the *Owner* and the *Consultant,* HVAC equipment and supply air ductwork may be used for ventilation during construction provided warranties are not affected-:

.1 Operate HVAC system on 100 percent outside air, with 1.5 air changes per hour, minimum.

.2 Ensure that air filters are correctly installed prior to starting use; replace filters when they lose efficiency.

.3 Do not use return air ductwork for ventilation.

.4 Seal return air inlets or otherwise positively isolate return air system to prevent recirculation of air; provide alternate return air pathways.

.6 Do not store construction materials or waste in mechanical or electrical rooms.

.7 Prior to use of return air ductwork without intake filters clean up and remove dust and debris generated by construction activities.

.1 Inspect duct intakes, return air grilles, and terminal units for dust.

.2 Clean plenum spaces, including top sides of lay-in ceilings, outsides of ducts, tops of pipes and conduit.
.3 Clean tops of doors and frames.
.4 Clean mechanical and electrical rooms, including tops of pipes, ducts, and conduit, equipment, and supports.
.5 Clean return plenums of air handling units.
.6 Remove intake filters last, after cleaning is complete.

.8 Do not perform dusty or dirty work after starting use of return air ducts without intake filters.

.9 Use other relevant recommendations of SMACNA (OCC) for avoiding unnecessary contamination due to construction procedures.

1.08 BUILDING FLUSH-OUT

.1 Contractor's Option: Either full continuous flush-out OR satisfactory air contaminant testing is required, not both.

.2 Perform building flush-out before occupancy.

.3 Do not start flush-out until:
.1 All construction is complete.
.2 HVAC systems have been tested, adjusted, and balanced for proper operation.
.3 Cleaning of inside of HVAC ductwork has been completed.
.4 Inspection of inside of return air ducts and terminal units confirms that cleaning is not necessary.
.5 New HVAC filtration media have been installed.

.4 Building Flush-Out: Operate all ventilation systems at normal flow rates with 100 percent outside air until a total air volume of 4500 cubic meters per square meter of floor area has been supplied.
.1 Obtain the *Consultant's* concurrence that construction is complete enough before beginning flush-out.
.2 Maintain interior temperature of at least 15 degrees C and interior relative humidity no higher than 60 percent.
.3 If additional construction involving materials that produce *Particulates* or any of the specified Contaminants is conducted during flush-out, start flush-out over.
.4 If interior spaces must be occupied prior to completion of the flush-out, supply a minimum of 25 percent of the total air volume prior to occupancy, and:
.1 Begin ventilation at least three hours prior to daily occupancy.
.2 Continue ventilation during all occupied periods.
.3 Provide minimum outside air volume of 0.0015 cu m/s/sq m or design minimum outside air rate, whichever is greater.

.5 Install new HVAC filtration media after completion of flush-out and before occupancy or further testing.

1.09 AIR CONTAMINANT TESTING

.1 Contractor's Option: Either full continuous flush-out, or satisfactory air contaminant testing is required, not both.

.2 Perform air contaminant testing before starting construction, as base line for evaluation of post-construction testing.

.3 Perform air contaminant testing before occupancy.

.4 Do not start air contaminant testing until:

.1 All construction is complete, including interior finishes.

.2 HVAC systems have been tested, adjusted, and balanced for proper operation.

.3 New HVAC filtration media have been installed.

.5 Indoor Air Samples: Collect from spaces representative of occupied areas:

.1 Collect samples while operable windows and exterior doors are closed, HVAC system is running normally as if occupied, with design minimum outdoor air, but with the building unoccupied.

.2 Collect samples from spaces in each contiguous floor area in each air handler zone, but not less than one sample per 2300 square meters; take samples from areas having the least ventilation and those having the greatest presumed source strength.

.3 Collect samples from height from 915 mm to 1830 mm above floor.

.4 Collect samples from same locations on 3 consecutive days during normal business hours; average the results of each set of 3 samples.

.5 Exception: Areas with normal very high outside air ventilation rates, such as laboratories, do not need to be tested.

.6 When retesting the same building areas, take samples from at least the same locations as in first test.

.6 Outdoor Air Samples: Collect samples at outside air intake of each air handler at the same time as indoor samples are taken.

.7 Analyze air samples and submit report.

.8 Air Contaminant Concentration Limits:

.1 Formaldehyde: Not more than 27 parts per billion.

.2 PM10 Particulates: Not more than 50 micrograms per cubic meter.

.3 Total Volatile Organic Compounds (TVOCs): Not more than 500 micrograms per cubic meter.

.4 Chemicals Listed in CAL (CDPH SM) Table 4-1, except Formaldehyde: Allowable concentrations listed in Table 4-1.

.5 Carbon Monoxide: Not more than 9 parts per million and not more than 2 parts per million higher than outdoor air.

.9 Air Contaminant Concentration Test Methods:

.1 Formaldehyde: ASTM D5197, EPA 625/R-96/010b Method TO-11A, or EPA 600/4-90/010 Method IP-6.

.2 Particulates: EPA 600/4-90/010 Method IP-10.

.3 Total Volatile Organic Compounds (TVOC): EPA 625/R-96/010b Method TO-1, TO-15, or TO-17; or EPA 600/4-90/010 Method IP-1.

.4 Chemicals Listed in CAL (CDPH SM) Table 4-1, except Formaldehyde: ASTM D5197, or EPA 625/R-96/010b Method TO-1, TO-15, or TO-17.

.5 Carbon Monoxide: EPA 600/4-90/010 Method IP-3, plus measure outdoor air; measure in ppm; report both indoor and outdoor measurements.

1.10 VENTILATION EFFECTIVENESS TESTING

.1 Perform ventilation effectiveness testing before occupancy.

.2 Do not begin ventilation effectiveness testing until:

.1 HVAC testing, adjusting, and balancing has been satisfactorily completed.

.2 Building flush-out or air Contaminant testing has been completed satisfactorily.

.3 New HVAC filtration media have been installed.

.3 Test each air handler zone in accordance with ASHRAE Std 129.

.4 If calculated air change effectiveness for a particular zone is less than 0.9 due to inadequate balancing of the system, adjust, and retest at no cost to the *Owner.*

.5 Prior to occupancy, submit a written report certifying compliance.

END OF SECTION 01 57 19

This page intentionally left blank

SECTION 01 60 00
PRODUCT REQUIREMENTS

PART 1 GENERAL

1.01 RELATED REQUIREMENTS

.1 Refer to General and Supplementary Conditions of the Contract, CCDC 2 - 2020

1.02 REFERENCE STANDARDS

.1 Within the text of the specifications, reference is made to various standards, codes and referenced documents. Conform to these standards, in whole or in part as specifically prescribed in the specifications.

.2 If there is question as to whether any product or system is in conformance with the applicable standards, the *Consultant* reserves the right to have such products or systems tested to prove or disprove conformance.

.3 The cost for such testing will be born by the *Owner* in the event of conformance with the *Contract Documents*, or by the *Contractor* in the event of non-conformance.

.4 Conform to latest date of issue of referenced standards in effect on the date of submission of *Bids*, except where a particular date or issue is specifically noted.

1.03 SUBMITTALS

.1 Product Data Submittals: Submit manufacturer's standard published data. Mark each copy to identify applicable products, models, options, and other data. Supplement manufacturers' standard data to provide information specific to this Project.

.2 Shop Drawing Submittals: Prepared specifically for this Project; indicate utility and electrical characteristics, utility connection requirements, and location of utility outlets for service for functional equipment and appliances.

.3 Sample Submittals: Illustrate functional and aesthetic characteristics of the product, with integral parts and attachment devices. Coordinate sample submittals for interfacing work.

.1 For selection from standard finishes, submit samples of the full range of the manufacturer's standard colours, textures, and patterns.

1.04 MANUFACTURER'S INSTRUCTIONS

.1 Unless otherwise indicated in the specifications, install or erect products in accordance with the manufacturer's instructions. Do not rely on labels or enclosures provided with products. Obtain written instructions directly from manufacturers.

.2 Notify the *Consultant* in writing of conflicts between the *Drawings* and/or specifications and the manufacturer's instructions, so that the *Consultant* may establish a course of action.

.3 Improper installation or erection of products, due to failure to comply with these requirements, authorizes the *Consultant* to require removal and re-installation at no increase in the *Contract Price* or *Contract time.*

1.05 QUALITY OF PRODUCTS

.1 Refer to CCDC 2 - 2020, GC 3.7 and the supplementary conditions of the contract.

.2 Provide *Products* that are not damaged or defective, and suitable for purpose indented subject to specified requirements. If requested by *Consultan*t, furnish

evidence as to type, source and quality of *Products* provided.

.3 Defective *Products*, whenever identified prior to completion of the *Work*, will be rejected, regardless of previous inspections. Inspection does not relieve teh *Contractor* of responsibility, but is a precaution against oversight and error. *Contractor* to remove and replace defective *Products* at own expense and be responsible for delays and expenses caused by rejection.

.4 Should any dispute arise as to the quality or fitness of *Products*, the decision rests strictly on the *Consultant*, based upon the requirements of the *Contract Documents.*

.5 Unless otherwise indicated in the specifications, maintain uniformity of manufacture for any particular or like item throughout the building.

.6 Permanent labels, trademarks and nameplates on products are not acceptable in prominent locations, except where required for operating instructions or when located in mechanical or electrical rooms.

1.06 QUALITY OF WORK

.1 Ensure the quality of *Work* is of the highest standard, executed by workers experienced and skilled in their respective duties for which they are employed. Immediately notify the Consultant if required Work is such as to make it impractical to produce the required results.

.2 Do not employ anyone unskilled in their required duties. The Consultant reserves the right to require dismissal from site, workers deemed incompetent or careless.

.3 In cases of dispute with respect to the standard or fitness of quality of work, decisions rest solely with the Consultant, whose decision is final.

PART 2 PRODUCTS

2.01 EXISTING PRODUCTS

.1 Do not use materials and equipment removed from existing premises unless specifically required or permitted by the *Contract Documents.*

.2 Unforeseen historic items encountered remain the property of the Owner; notify Owner promptly upon discovery; protect, remove, handle, and store as directed by Owner.

.3 Existing materials and equipment indicated to be removed, but not to be re-used, relocated, reinstalled, delivered to the Owner, or otherwise indicated as to remain the property of the Owner, become the property of the Contractor; remove from site.

2.02 NEW PRODUCTS

.1 Products, materials and equipment and articles (referred to as products throughout the specifications) incorporated in the Work shall be new, not damaged or defective and of the best quality (compatible with the specifications) for the purpose intended. If requested, furnish evidence as to the type, source and quality of products provided.

.2 Use of products having any of the following characteristics is not permitted:

.1 Containing lead, cadmium, or asbestos.

.3 Where other criteria are met, Contractor shall give preference to products that:

.1 If used on interior, have lower emissions

.2 If wet-applied, have lower VOC content

2.03 PRODUCT OPTIONS

.1 *Products* Specified by Reference Standards or by Description Only: Use any *Product* meeting those standards or description.

.2 *Products* Specified by Naming One or More Manufacturers: Use a *Product* of one of the manufacturers named and meeting specifications, no options or substitutions allowed.

.3 *Products* Specified by Naming One or More *Manufacturers* with a Provision for Substitutions: Submit a request for substitution for any manufacturer not named.

2.04 PRODUCT AVAILABILITY AND DELIVERY TIMES

.1 Promptly upon *Contract* award and periodically during construction, review and confirm *Product* availability and delivery times. Order *Products* in sufficient time to meet the construction progress schedule and the *Contract Time.*

.2 If a specified *Product* is no longer available, promptly notify *Consultant*. *Consultant* will take action as required.

.3 If delivery delays are forseable for any reason, promptly notify *Consultant*.

.1 If a delivery delay is beyong *Contractor's* control, *Consultant* will provide direction.

.2 If a delvery delay is caused by something that was or is within the *Contractor's* control, *Contractor* shall propose actions to maintain the construction progress scehdule for the *Consultant's* review and acceptance.

PART 3 EXECUTION

3.01 TRANSPORTATION AND HANDLING

.1 Pay the costs of transportation of *Products* required in the performance of the *Work.*

.2 Transportation fost of products supplied by the Owner will be paid for by the Owner. Unload, handle and store such products.

.3 Package *Products* for shipment in manner to prevent damage; for equipment, package to avoid loss of factory calibration.

.4 If special precautions are required, attach instructions prominently and legibly on outside of packaging.

.5 Coordinate schedule of *Product* delivery to designated prepared areas in order to minimize site storage time and potential damage to stored materials.

.6 Transport and handle *Products* in accordance with manufacturer's instructions.

.7 Transport materials in covered trucks to prevent contamination of *Product* and littering of surrounding areas.

.8 Promptly inspect shipments to ensure that products comply with requirements, quantities are correct, and products are undamaged.

.9 Provide equipment and personnel to handle products by methods to prevent soiling, disfigurement, or damage, and to minimize handling.

.10 Arrange for the return of packing materials, such as wood pallets, where economically feasible.

3.02 STORAGE AND PROTECTION

.1 Designate receiving/storage areas for incoming products so that they are delivered according to installation schedule and placed convenient to work area in order to minimize waste due to excessive materials handling and misapplication.

.2 Store and protect products in accordance with manufacturers' instructions.

.3 Store with seals and labels intact and legible.

.4 Store sensitive products in weathertight, climate-controlled enclosures in an environment favorable to product.

.5 For exterior storage of fabricated products, place on sloped supports to shed moisture, above the ground.

.6 Comply with the requirements of the workplace hazardous materials information system (WHMIS) regarding use, handling, storage, and disposal of hazardous materials, including requirements for labeling and provision of material safety data sheets (MSDS.)

.7 Protect products from damage or deterioration due to construction operations, weather, precipitation, humidity, temperature, sunlight and ultraviolet light, dirt, dust, and other contaminants.

.8 Comply with manufacturer's warranty conditions, if any.

.9 Store cementitious products clear of earth or concrete floors, and away from walls.

.10 Keep sand, when used for grout or mortar materials, clean and dry. Store sand on wooden platforms and cover with waterproof tarpaulins.

.11 Store and mix paints in a heated and ventilated room. Remove oily rags and other combustible debris from site daily. Take every precaution necessary to prevent spontaneous combusion.

.12 Cover products subject to deterioration with impervious sheet covering. Provide ventilation to prevent condensation and degradation of products.

.13 Prevent contact with material that may cause corrosion, discolouration, or staining.

.14 Provide equipment and personnel to store products by methods to prevent soiling, disfigurement, or damage.

.15 Arrange storage of products to permit access for inspection. Periodically inspect to verify products are undamaged and are maintained in acceptable condition.

.16 Remove and replace any damaged *Products* at own expense and to the satisfaction of the *Consutlant.*

3.03 CO-ORDINATION

.1 Ensure cooperation of workers in laying out the Work. Maintain efficient and continuous supervision.

.2 Be responsible for coordination of placement of openings, sleeves and accessories.

3.04 CONCEALMENT

.1 In finishes areas, conceal pipes, ducts and wiring in floors walls and ceilings except where indicated otherwise.

.2 Before installation, inform Consultant if there is interference. Install as directed by the Consultant.

.3

3.05 REMEDIAL WORK

.1 Refer to CCDC 2, GC 3.2 and the supplementary conditions of the *Contract.*

3.06 LOCATION OF FIXTURES

.1 Consider the location of fixtures, outlets and mechanical and electrical items as approximate.

.2 Inform the *Consultant* in writing of conflicting installation. Install as directed.

.3 If the *Contractor* fails to coordinate the work of the sub trades and relocation of fixtures, conduits, ductwork etc. is required due to interference, even if the *Consultants* drawing was improperly coordinated - then all associated costs of relocations, repainting etc. will be borne by the *Contractor.*

3.07 FASTENINGS

.1 Provide metal fastenings and accessories in the same texture, colour and finish as adjacent materials unless indicated otherwise.

.2 Prevent electrlytic action between dissimilar metals and materials.

.3 Use non-corrosive hot-dip galvanized steel fasteners and anchors for securing exterior work, unless stainless steel or other material is specifically prescribed in the applicable specification section or manufacturer's instructions.

.4 Space anchors within their individual load limit or shear capacity and ensure that they provide positive permanent anchorage. Wood, or any other organic material plugs are not acceptable.

.5 Keep exposed fastenings to a minimum; space evenly and install neatly.

.6 Keep exposed sharp edges of fasteners to a minimum; any exposed sharp edges of fasteners that cannot be remediated are to be capped.

.7 Fastenings which cause spalling or cracking of the material to which anchorage is made are not acceptable.

.8 Fastening Equipment:

.1 Use fastenings of standard commercial sizes and patterns with material and finish suitable for service.

.2 Use heavy hexagon heads, semi-finishes unless otherwise specified. Use no. 304 stanless steel for exterior areas.

.3 Bolts may not project more than one diameter beyond nuts.

.4 We plain type washers on equipment, sheet metal and soft gasket lock-type washers where vibrations occur. Use resilient washers with stainless steel.

3.08 PROTECTION OF WORK IN PROGRESS

.1 Prevent overloading of any part of the building. Do not cut, drill or sleeve any load bearing structural member, unless specifically indcated, without the written approval of the Consultant.

3.09 EXISTING UTILITIES

.1 When breaking into or connecting to existing services or utilities execute the work at times directed by local governing authorities, with a minimum or distrubance to the work and pedestrian and vehicular traffic.

.2 Protect, relocate or maintain existing active services. When services are encountered ,cap off in a manner approved by the authority having jurisdiction. Stake and record the location of the capped service.

END OF SECTION 01 60 00

SECTION 01 71 23
SITE ENGINEERING

PART 1 GENERAL

1.01 RELATED DOCUMENTS

.1 Drawings and general provisions of the Contract, including General and Supplementary Conditions and Division 01 Specifications sections, apply to this section

1.02 SECTION INCLUDES

.1 Site engineering services by the *Contractor*

.2 Land surveying services by the *Contractor.*

1.03 DESCRIPTION OF SERVICES

.1 Specific services listed in this section are in addition to, and do not supersede, general execution and closeout requirements.

.2 Sole responsibility for establishing all locations, dimensions and levels of items of work.

.3 Sole responsibility for provision of all materials required to establish and maintain benchmarks and control points, including batter boards, grade stakes, structure elevation stakes, and other items.

.4 Having a skilled instrument person(s) available on short notice when necessary for laying out the *Work*.

.5 Keeping a transit, theodolite, or TST (total station theodolite with electronic distance measurement device); levelling instrument; and related implements such as survey rods and other measurement devices, at the *Project* site at all times.

.6 Provision of facilities and assistance necessary for the *Consultant* to check lines and grade points placed by the *Contractor.*

.1 Performance of excavation or embankment work until all cross-sectioning necessary for determining payment quantities for Unit Price work have been completed and accepted by the *Consultant.*

.7 Preparation and maintenance of daily reports of activity on the *Work*. Submission of reports containing key progress indicators and job conditions to the *Consultant.*

.1 Number employees at the Site for each of the *Contractors* and *Subcontractors.*

.2 Breakdown of employees by trades.

.3 Major equipment and materials installed as part of the *Work.*

.4 Major *Construction Equipment* utilized.

.5 Location of areas in which construction was performed.

.6 Materials and equipment received.

.7 Work performed, including site quality control measures and testing.

.8 Weather conditions.

.9 Safety.

.10 Delays encountered, amount of delay incurred, and the reasons for the delay.

.11 Instructions received from the *Consultant* or the *Owner*, if any.

.8 Preparation and maintenance of professional-quality, accurate, well organized, legible notes of all measurements and calculations made while surveying and laying out the *Work*.

.9 Prior to backfilling operations, surveying - locating, and recording on a copy of the *Contract Documents* - an accurate representation of buried work and underground facilities.

.1 Supplement the *Drawings* with a photographic record.

.10 Facilities encountered.

1.04 REFERENCE STANDARDS

.1 SMACNA (SRM) - Seismic Restraint Manual Guidelines for Mechanical Systems 2008.

1.05 ADMINISTRATIVE REQUIREMENTS

.1 Preinstallation Meeting: Conduct a preinstallation meeting one week prior to the start of the work of this section; require attendance by all affected parties

1.06 SUBMITTALS

.1 Submit in accordance with Sections of Div 01 of this specification.

1.07 QUALITY ASSURANCE

.1 Site Engineer's Qualifications: As established in Section 01 73 00 - Closeout Requirements.

.2 Land Surveyor's Qualifications: As established in Section 01 73 00 - Closeout Requirements.

.3 Use an adequate number of skilled and thoroughly-trained workers to perform the work of this section in a timely and comprehensive manner.

PART 2 PRODUCTS - NOT USED

PART 3 EXECUTION

3.01 EXAMINATION

.1 Verify the layout information shown on the *Drawings*, in relation to the property survey and existing benchmarks. Notify the *Owner's* Representative and the *Consultant* of any discrepancies immediately in writing before proceeding to lay out the *Work.* Locate and protect existing benchmarks and base line. Preserve permanent reference points during construction.

.2 Existing Utilities and Equipment: The existence and location of underground and other utilities and construction indicated as existing are not guaranteed. Before beginning sitework, investigate and verify existing conditions.

3.02 SITE ENGINEERING

.1 Maintain site office files, *Drawings*, *Specifications*, and record documents.

.2 Coordinate site engineering services with the *Contractor's Subcontractors,* installers, and *Suppliers* as appropriate.

.3 Prepare layout and coordination *Drawings* for construction operations.

.4 Check and coordinate the *Work* for conflicts and interferences, and immediately advise the *Consultant* and the *Owner* of all discrepancies of which the *Contractor*

is aware.

.5 Cooperate as required with the *Consultant* and the *Owner* in observing the *Work* and performing field inspections.

.6 Review and coordinate work on a regular basis with the *Shop Drawings* and the *Contractor's* other *Submittals*.

.7 Check the location, line and grade of every major element as the *Work* progresses. Notify the *Consultant* when deviations from required lines or grades exceed allowable tolerances. Include in such notifications a thorough explanation of the problem, and a proposed plan and schedule for remedying the deviation. Do not proceed with remedial work without the *Consultant*'s acceptance of the remediation plan.

.8 Check all formwork, reinforcing, inserts, structural steel, bolts, sleeves, piping, other materials and equipment for compliance with the *Shop Drawings* and *Contract Documents* requirements.

.9 Check all bracing and shoring for structural integrity and compliance with designs prepared by the *Contractor.*

3.03 LAND SURVEYING

.1 The *Contractor* is responsible for the restoration of all property corners and control monuments damaged or destroyed by construction-related activities. Any disturbed monuments must be replaced at the *Contractor's* expense by a surveyor licensed in the Province in which the Project is located, and approved by the *Consultant*.

.1 Temporarily suspend work at such points and for such reasonable times as the *Owner* may require for resetting monuments. The *Contractor* will not be entitled to any additional compensation or extension of time.

3.04 CONSTRUCTION SURVEYING

.1 General: Perform surveying as applicable to specific items necessary for proper execution of work.

.1 Alignment Staking: Provide alignment stakes at 15.24 m intervals on tangent, and at 7.62 m intervals on curves.

.2 Slope Staking: Provide slope staking at 15.24 m intervals on tangent, and at 7.62 m intervals on curves. Re-stake at every 3 m difference in elevation.

.3 Structure: Stake out structures, including elevations, and check prior to and during construction.

.4 Pipelines: Stake out pipelines including elevations, and check prior to and during construction.

.5 Site Utilities: Stake out utility lines including elevations, and check prior to and during construction.

.6 Road: Stake out roadway elevations at 15.24 m intervals on tangent, and at 7.62 m intervals on curves.

.7 Cross-sections: Provide original, intermediate, and final staking as required, for site work and other locations as necessary for quantity surveys.

.8 Easement Staking: Provide easement staking at 15.24 m intervals on tangent, and at 7.62 m intervals on curves. If required by *Project*

conditions, provide wooden laths with flagging at 30 m intervals.

.9 Record Staking: Provide a permanent stake at each blind flange and each utility for future connections. Use stakes for record staking of material(s) and configuration acceptable to the *Consultant.*

.10 Structural Frame: Upon completion, certify location and plumbness.

.2 Surveying to determine quantities for payment.

.1 For each application for progress payment, perform such surveys and computations necessary to determine quantities of work performed or placed. Perform surveys necessary for the *Consultant* to determine final quantities of work in place.

.2 Notify the *Consultant* at least 24 hours before performing survey services for determining quantities. Unless waived in writing by the *Consultant,* perform quantity surveys in the presence of the *Consultant.*

.3 Record Log: Maintain a log of layout control work. Record any deviations from required lines and levels. Include beginning and ending dates and times of surveys, weather conditions, name and duty of each survey party member, and types of instruments and tapes used.

.4 Use by the *Consultant:* The *Consultant* may at any time use line and grade points and markers established by the *Contractor.* The *Contractor's* surveys are a part of the *Work* and may be checked by the *Consultant* at any time.

.5 Should the status of the *Work* require reinspection by the *Consultant* due to failure of work to comply with the *Contract Documents,* the *Owner* will deduct the costs of reinspection services from payment to the *Contractor.*

.6 Accuracy:

.1 Establish temporary survey references points for the *Contractor's* use to at least second-order accuracy (e.g., 1:10000). Set construction staking used as a guide for the *Work* to at least third-order accuracy (e.g., 1:5000). Provide the absolute margin for error specified below on the basis established by such orders.

.1 Accuracy of other staking shall be plus or minus 12.2 mm horizontally and plus or minus 6.1 mm vertically.

.2 Include an error analysis sufficient to demonstrate required accuracy in survey calculations.

.2 The *Owner* reserves the right to check the *Contractor's* survey, measurements, and calculations. The requirement for accuracy will not be waived, whether this right is exercised or not.

3.05 SUPPORT AND BRACING

.1 General requirements: Design all support and bracing systems, if required. Provide for attachment to portions of the building structure capable of bearing the loads imposed. Design systems to not overstress the building structure.

.2 Seismic Bracing: Design where required by the authorities having jurisdiction.

.1 Design and install support systems to comply with the seismic requirements of the Building Code of the Province in which the Project is located.

.2 Design and install seismic bracing so as not to negate the operation on any required vibration isolation or sound isolation devices.

.3 Design seismic bracing guidelines for mechanical, electrical and plumbing systems in accordance with SMACNA (SRM).

3.06 REPORTS

.1 Submit reports when requested by the *Owner* or the *Consultant.* Daily reports shall be signed by responsible member of the *Contractor's* staff, such as the superintendent or foreman designated by the *Contractor* as having authority to sign daily reports.

3.07 RECORDS

.1 Maintain at the site a complete and accurate log of control and survey work as it progresses.

.1 Organize and record survey data in accordance with recognized professional surveying standards, laws and regulations, and prevailing standards of practice in the Province in which the Project is located. Record the *Contractor's* surveyor's original field notes, computations, and other surveying data in *Contractor*-furnished hard-bound site books. The *Contractor* is solely responsible for completeness and accuracy of the survey work, and completeness and accuracy of survey records, including site books. Survey records,(including site books) may be rejected by the *Consultant* due to failure to organize and maintain survey records in a manner that allows reasonable and independent verification of calculations, and/or allows identification of elevations, dimensions, and grades of the *Work.*

.2 Illegible notes or data, and erasures on any page of site books, are unacceptable. Do not submit copied notes or data. Corrections by ruling or lining out errors will be unacceptable unless initialed by the surveyor. Violation of these requirements may require re-surveying the data questioned by the *Consultant.*

.2 Submit to the *Owner* a digital copy in .pdf format of the final property survey. Include on the survey a certification, signed by the surveyor, that principal metes, bounds, lines, and levels of the *Project* are accurately positioned as shown on the survey. Include the following information:

.1 Structure locations from property lines, and distances to adjacent buildings.

.2 Dimensions and locations of drives, walks, walls, underground utilities, appurtenances, and major site features.

.3 Location of easements.

.4 Final grading topographic survey.

END OF SECTION 01 71 23

This page intentionally left blank

SECTION 01 73 00
CLOSEOUT REQUIREMENTS

PART 1 GENERAL

1.01 SECTION INCLUDES

.1 Final Cleaning
.2 Document Submission
.3 Operating and Maintenance Manuals
.4 Inspection and Takeover Procedures
.5 Systems Demonstration

1.02 RELATED REQUIREMENTS

.1 Section 01 79 00 - Demonstration and Training
.2 Section 01 78 00 - Closeout Submittals
  .1 Project Record Documents
  .2 Warranties
  .3 Operation and Maintenance Manual
  .4 Spare Parts and Maintenance Materials
  .5 Final Commissioning Report - See M&E drawings for requirements

1.03 SUBMITTALS

.1 Refer to Section 01 33 00 - Submittal Procedures, for submittal procedures.
.2 Make all submittals as required by governing bodies and authorities having jurisdiction, as well as applicable lien legislation.
.3 Refer to Section 01 78 00 - Closeout Submittals for closeout submittals.

1.04 CONTRACTOR'S INSPECTION FOR READY-FOR-TAKEOVER

.1 The *Contractor* shall determine when the work meets the requirements of *Ready-For-Takeover* and shall undertake an inspection. A list of deficiencies shall be prepared by the *Contractor* and issued to appropriate Subcontractors and a copy shall be forwarded to the *Consultant.*
.2 When the *Contractor* is satisfied that Ready-For-Takeover has been achieved he shall make application to the *Consultant* by filling out a Substantial Performance Request Form apended to this Section
.3 All items referenced on the Substantial Performance Request Form shall be forwarded along with the form.
.4 The *Consultant* will not acknowledge receipt of Substantial Performance Request Form until all items specified on the form have been received at the *Consultant's* office.

1.05 INSPECTION BY CONSULTANT AND OWNER

.1 Upon receipt of Substantial Performance Request Form and other related documents, the *Consultant* will arrange for an inspection. Representatives of the *Consultant*, *Sub-Consultants* and *Owner* shall be present at the inspection.
.2 The *Contractor* shall arrange for all major *Subcontractors* to have representatives available to attend this inspection.

.3 The *Consultant* shall verify that Ready-For-Takeover has been attained and that the list of deficiencies provided by the *Contractor* reflects the completeness of the project. Any additional items identified during the inspection shall be appended to the *Contractor's* deficiency list.

.4 The date of Ready-For-Takeover shall be verified at this inspection, and the *Consultant* will confirm a date for final inspection.

.5 If the project is deemed to be NOT Complete – the *General Contractor* will bear the cost of the *Consultants* re-inspections of the site charged at $1,500 per *Consultant* and *Sub-consultant.*

1.06 INSPECTION AND DECLARATION PROCEDURES

.1 Follow the recommended procedures concerning *Ready-For-Takeover* of construction *Contracts* and completion take-over of projects as prescribed in OAA/OGCA Document 100 "Take Over Procedures".

.2 Reinspection:

.1 Should the status of the *Work* require reinspection by The *Consultant* or a testing agency due to failure of the *Work* to comply with the *Contract Documents*, the *Owner* will deduct the costs of reinspection services from payment to the *Contractor*.

1.07 REINSPECTION FEE

.1 Should it become evident, at the time of inspection by the *Consultant*, that Ready-For-Takeover has not been achieved, the *Contractor* will be responsible for all expenses incurred for a re-inspection and any subsequent inspections required due to lack of completeness of the project.

1.08 SYSTEMS DEMONSTRATION

.1 Prior to Ready-For-Takeover and take over of the building by the *Owner,* provide on-site demonstrations of mechanical, electrical and other automated equipment for the *Owner's* personnel. Refer to section 01 79 00 - Demonstration and Training *

.2 Instruct the *Owner's* personnel in the operation, adjustment and maintenance of equipment and systems.

.3 Provide necessary spare parts and other materials necessary to demonstrate equipment.

.4 Ensure all operating and maintenance instructions and data are incorporated into the Operation and Maintenance Manual as specified in Section 01 78 00 - Closeout Submittals

1.09 FINAL CLEANING

.1 Prior to *Ready-For-Takeover,* remove surplus *Products*, tools, construction machinery and equipment not required for the performance of the remaining *Work*.

.2 Remove stains, dirt and smudges from finished surfaces.

.3 Clean exposed finished surfaces in accordance with respective material manufacturers' recommendations.

.4 Clean and polish glass, mirrors, hardware, wall tile, stainless steel, chrome, porcelain enamel, baked enamel, plastic laminate, mechanical and electrical fixtures. Replace broken, scratched or disfigured glass.

.5 Remove stains, spots, marks and dirt from decorative work, electrical and mechanical fixtures, furniture fitments, walls, and floors and other surfaces.

.6 Vacuum clean and dust building interiors, behind grilles, louvres and screens.

.7 Wax, seal, shampoo or prepare floor finishes, as recommended by the manufacturer.

.8 Inspect finishes, fitments and equipment and ensure specified workmanship and operation.

.9 Broom clean and wash exterior walks, steps and surfaces.

.10 Remove dirt and other disfiguration from exterior surfaces.

.11 Clean and sweep roofs, gutters, areaways, sunken wells.

.12 Sweep and wash clean paved areas.

.13 Clean mechanical and electrical fixtures and other fittings of labels, wrappings, paper and other foreign material.

.14 Replace heating, ventilation and air conditioning filters, if units were operated during construction.

.15 Clean ducts, blowers and coils if heating, ventilation and air conditioning systems were operated without filters during construction.

.16 When the *Work* is totally performed, remove surplus *Products*, tools, construction machinery and equipment. Remove waste products and debris.

1.10 END OF WARRANTY INSPECTION

.1 Approximately one year after the date of Ready-For-Takeover, a year-end warranty inspection shall be arranged by the *Contractor*. The *Consultant* and the *Owner's* representatives shall attend.

.2 Hidden defects that do not appear within the one (1) year warranty period will be deemed to be under warranty for a period of five (5) years.

1.11 SUBSTANTIAL PERFORMANCE OF THE WORK

.1 The prerequisites to, and the procedures for, attaining substantial performance of the Work, or similar such milestone as provided for in the lien legislation applicable to the Place of the Work, shall be:

.1 independent of those for attaining Ready-For-Takeover of the *Work*, and

.2 in accordance with the lien legislation applicable to the *Place of the Work.*

END OF SECTION 01 73 00

This page intentionally left blank

SECTION 01 73 29
CUTTING, PATCHING AND MAKING GOOD

PART 1 GENERAL

1.01 SECTION INCLUDES

1.02 SUBMITTALS

.1 See Section 01 33 00 - Submittal Procedures for submittal procedures.

.2 Submit a written request in advance of cutting or alteration which affects:

- .1 Structural integrity of any element of *Project.*
- .2 Integrity of weather-exposed or moisture-resistant elements.
- .3 Efficiency, maintenance, or safety of any operational element.
- .4 Visual qualities of sight-exposed elements.
- .5 Work of the *Owner* or a separate contractor.

.3 Include in the request:

- .1 Identification of the *Project.*
- .2 Location and description of affected *Work*.
- .3 Statement on the necessity for cutting or alteration.
- .4 Description of proposed *Work*, and products to be used.
- .5 Alternatives to cutting and patching.
- .6 Effect on the *Work* of the *Owner* or a separate contractor.
- .7 Written permission of the affected separate contractor.
- .8 Date and time work will be executed.

1.03 MATERIALS

.1 As required for the original installation.

.2 Change in Materials: Submit a request for substitution in accordance with Section 01 33 00 - Submittal Procedures .

1.04 PREPARATION

.1 Inspect existing conditions, including elements subject to damage or movement during cutting and patching.

.2 After uncovering, inspect conditions affecting the performance of the *Work*.

.3 Beginning of cutting or patching means acceptance of existing conditions.

.4 Provide supports to assure the structural integrity of the surroundings; provide devices and methods to protect other portions of the project from damage.

.5 Provide protection from the elements for areas which may be exposed by uncovering work; maintain excavations free of water.

.6 In cases of retrofits or fit ups of existing buildings, the *General Contractor*, prior to commencing any works on existing conditions, is to review the provided Designated Substance Report and take appropriate measures as required. If no report has been provided, the *General Contractor* shall inform the *Owner* and *Consultant* that no report was provided and the GC will proceed to have the affected areas tested on behalf of the *Owner* and the costs of such testing will be paid by the *Owner* out of the testing and inspection allowances.

1.05 EXECUTION

.1 Execute cutting, fitting, and patching and making good, including excavation and fill, to complete the *Work.*

.2 Fit several parts together, to integrate with other *Work.*

.3 Uncover *Work* to install ill-timed work.

.4 Remove and replace defective and non-conforming *Work.*

.5 Remove samples of installed *Work* for testing.

.6 Provide openings in non-structural elements of the *Work* for penetrations of mechanical and electrical work.

.7 Execute *Work* by methods to avoid damage to other *Work,* and which will provide proper surfaces to receive patching and finishing.

.8 Employ the original installer to perform cutting and patching for weather-exposed and moisture-resistant elements, and sight-exposed surfaces.

.9 Cut rigid materials using a masonry saw or core drill. Pneumatic or impact tools are not allowed on masonry work without prior approval.

.10 Restore work with new products in accordance with the requirements of the *Contract Documents.*

.11 Fit Work airtight to pipes, sleeves, ducts, conduit, and other penetrations through surfaces.

.12 At penetrations of fire rated walls, ceilings, or floor construction, completely seal voids with firestopping material, full thickness of the construction element to provide a fire rating at least equal to the fire rating of the penetrated assembly. The general contractor is responsible at time of tender to review the mechanical and HVAC drawings as well as the fire rated walls indicated on the Architects drawings and carry for any cost of pipe doughnuts, fire dampers, fire caulking etc. required – whether shown or not on the consultants drawings. The GC is responsible to inform the sub trades of any additional fire stopping or fire damping requirements prior to bidding period.

.13 Refinish surfaces to match adjacent finishes: For continuous surfaces refinish to the nearest intersection; for an assembly, refinish the entire unit.

.14 Conceal pipes, ducts and wiring in floor, wall and ceiling construction of finished areas, except where indicated otherwise.

END OF SECTION 01 73 29

SECTION 01 74 19
CONSTRUCTION WASTE MANAGEMENT AND DISPOSAL

PART 1 GENERAL

1.01 WASTE MANAGEMENT COORDINATOR

.1 The *Contractor* will designate one person as "Waste Management Coordinator (WMC)" to be responsible for implementation of the waste management plan and ensuring compliance by all construction personnel with the requirements of this section.

.2 Comply with the Environmental Protection Act, Ontario Regulations O. Reg. 102/94 and O. Reg.103/94 for waste management program on construction and demolition projects.

1.02 WASTE MANAGEMENT PLAN

.1 The WMC shall develop and implement a Waste Management Plan for the *Project* to implement procedures to reduce, reuse and recycle materials to the maximum extent possible.

.2 A copy of the Waste Management Plan will be posted in a conspicuous location where it can be readily seen by all construction personnel.

1.03 WASTE MANAGEMENT REQUIREMENTS

.1 The *Owner* requires that this *Project* generate the least amount of trash and waste possible.

.2 Employ processes that ensure the generation of as little waste as possible due to error, poor planning, breakage, mishandling, contamination, or other factors.

.3 Minimize trash/waste disposal in landfills; reuse, salvage, or recycle as much waste as economically feasible.

.4 The *Contractor* shall submit periodic waste disposal reports.

- .1 All landfill disposal, recycling, salvage, and reuse must be reported regardless of to whom the cost or savings accrues; use the same units of measure on all reports.
- .2 The *Contractor* shall develop and follow a Waste Management Plan designed to implement these requirements.

.5 Methods of trash/waste disposal that are not acceptable are:

- .1 Burning on the *Project* site.
- .2 Burying on the *Project* site.
- .3 Dumping or burying on other property, public or private.
- .4 Dumping in bodies of water
- .5 Other illegal dumping or burying.
- .6 Incineration, either on- or off-site.

.6 Regulatory Requirements: *Contractors* are responsible for knowing and complying with regulatory requirements, including but not limited to federal, provincial and local requirements, pertaining to legal disposal of all construction and demolition waste materials.

1.04 DEFINITIONS

.1 *Clean:* Untreated and unpainted; not contaminated with oils, solvents, caulk, or the like.

.2 *Construction and Demolition Waste:* Solid wastes typically including building materials, packaging, trash, debris, and rubble resulting from construction, remodeling, repair and demolition operations.

.3 *Hazardous:* Exhibiting the characteristics of hazardous substances, i.e., ignitibility, corrosivity, toxicity or reactivity.

.4 *Nonhazardous:* Exhibiting none of the characteristics of hazardous substances, i.e., ignitibility, corrosivity, toxicity, or reactivity.

.5 *Nontoxic:* Neither immediately poisonous to humans nor poisonous after a long period of exposure.

.6 *Recyclable:* The ability of a *Product* or material to be recovered at the end of its life cycle and remanufactured into a new product for reuse by others.

.7 *Recycle:* To remove a waste material from the *Project* site to another site for remanufacture into a new *Product* for reuse by others.

.8 *Recycling:* The process of sorting, cleansing, treating and reconstituting solid waste and other discarded materials for the purpose of using the altered form. Recycling does not include burning, incinerating, or thermally destroying waste.

.9 *Return:* To give back reusable items or unused Products to vendors for credit.

.10 *Reuse:* To reuse a construction waste material in some manner on the *Project* site.

.11 *Salvage:* To remove a waste material from the *Project* site to another site for resale or reuse by others.

.12 *Sediment:* Soil and other debris that has been eroded and transported by storm or well production run-off water.

.13 *Source Separation:* The act of keeping different types of waste materials separate beginning from the first time they become waste.

.14 *Toxic:* Poisonous to humans either immediately or after a long period of exposure.

.15 *Trash:* Any Product or material unable to be reused, returned, recycled, or salvaged.

.16 *Waste:* Extra material or material that has reached the end of its useful life in its intended use. Waste includes salvageable, returnable, recyclable, and reusable material.

1.05 SUBMITTALS

.1 See Section 01 33 00 - Submittal Procedures, for submittal procedures.

.2 Waste Management Plan: Include the following information:

.1 Analysis of the trash and waste projected to be generated during the entire *Project* construction cycle, including types and quantities.

.2 Landfill Options: The name, address, and telephone number of the landfill(s) where trash/waste will be disposed of, the applicable landfill tipping fee(s), and the projected cost of disposing of all *Project* trash/waste in the landfill(s).

.3 Landfill Alternatives: List all waste materials that will be diverted from landfills by reuse, salvage, or recycling.
.4 Meetings: Describe regular meetings to be held to address waste prevention, reduction, recycling, salvage, reuse, and disposal.
.5 Materials Handling Procedures: Describe the means by which materials to be diverted from landfills will be protected from contamination and prepared for acceptance by designated facilities; include separation procedures for recyclables, storage, and packaging.
.6 Transportation: Identify the destination and means of transportation of materials to be recycled; i.e. whether materials will be site-separated and self-hauled to designated centers, or whether mixed materials will be collected by a waste hauler.

.3 Waste Disposal Reports: Submit at specified intervals, with details of quantities of trash and waste, means of disposal or reuse, and costs; show both totals to date and since last report.
.1 Submit an updated report with each application for progress payment
.1 Failure to submit the report will delay payment.
.2 Submit Report on a form acceptable to the *Owner.*
.3 Landfill disposal: Include the following information:
.1 Identification of material.
.2 Amount, in cubic metres, of trash/waste material from the *Project* disposed of in landfills.
.3 State the identity of landfills, total amount of tipping fees paid to landfill, and total disposal cost.
.4 Include manifests, weight tickets, receipts, and invoices as evidence of quantity and cost.
.4 Recycled and salvaged materials: Include the following information for each:
.1 Identification of material, including those retrieved by installer for use on other projects.
.2 Transportation cost, amount paid or received for the material, and the net total cost or savings of salvage or recycling each material.
.3 Include manifests, weight tickets, receipts, and invoices as evidence of quantity and cost.
.4 Certification by receiving party that materials will not be disposed of in landfills or by incineration.
.5 Material reused on the *Project*: Include the following information for each:
.1 Identification of material and how it was used in the *Project.*
.2 Amount, in cubic metres.
.3 Include weight tickets as evidence of quantity.
.6 Other disposal methods: Include information similar to that described above, as appropriate to the disposal method.

PART 2 PRODUCTS

3.01 REGULATORY REQUIREMENTS

.1 The *Contractor* is responsible for knowing and complying with regulatory requirements, including but not limited to Federal, provincial and local requirements, pertaining to legal disposal of all construction and demolition waste

materials.

3.02 PRODUCT SUBSTITUTIONS

.1 See Div 01, General and Supplementary Conditions of the Contract.

.2 For each of the proposed *Product Substitutions*, submit the following information in addition to requirements specified in Section 01 25 00 - Substitution Procedures.

.1 Relative amount of waste produced, compared to the specified *Product.*

.2 Cost savings on waste disposal, compared to the specified *Product*, to be deducted from the *Contract* Price.

.3 Proposed disposal method for the waste product.

.4 Markets for the recycled waste product.

PART 3 EXECUTION

5.01 WASTE MANAGEMENT PROCEDURES

.1 See Div 01, *General* and *Supplementary Conditions of the Contract* for additional requirements for *Project* meetings, reports, submittal procedures, and *Project* documentation.

.2 See Section 01 50 00 - Temporary Facilities and Controls * for additional requirements related to trash/waste collection and removal facilities and services.

.3 See Section 01 60 00 - Product Requirements for waste prevention requirements related to delivery, storage, and handling.

.4 See Section 01 73 00 - Closeout Requirements for trash/waste prevention procedures related to demolition, cutting and patching, installation, protection, and cleaning.

5.02 WASTE MANAGEMENT PLAN IMPLEMENTATION

.1 Designate an on-site person or persons responsible for instructing workers and overseeing and documenting results of the Waste Management Plan.

.2 Distribute copies of the Waste Management Plan to the job site foreman, each *Subcontractor* the *Owner,* and the *Consultant*.

.3 Provide on-site instruction of appropriate separation, handling, and recycling, salvage, reuse, and return methods to be used by all parties at the appropriate stages of the *Project*.

.4 Meetings: Discuss trash/waste management goals and issues at *Project* meetings.

.1 Pre-bid meeting.

.2 Pre-construction meeting.

.3 Regular job-site meetings.

.4 Job safety meetings.

.5 Facilities: The *Contractor* will provide specific facilities for separation and storage of materials for recycling, salvage, reuse, return, and trash disposal, for use by all *Subcontractors* and installers.

.1 As a minimum, provide:

.1 Separate area for storage of materials to be reused on-site, such as wood cut-offs for blocking.

.2 Separate dumpsters for each category of recyclable.
.3 Recycling bins at worker lunch area.

.2 Provide containers as required.
.3 Provide temporary enclosures around piles of separated materials to be recycled or salvaged.
.4 Provide materials for barriers and enclosures that are nonhazardous, recyclable, or reusable to the maximum extent possible; reuse *Project* construction waste materials if possible.
.5 Locate enclosures out of the way of construction traffic.
.6 Provide adequate space for pick-up and delivery and convenience to *Subcontractors.*
.7 Keep recycling and trash/waste bin areas neat and clean and clearly marked in order to avoid contamination of materials.

.6 Hazardous Wastes: Separate, store, and dispose of hazardous wastes according to applicable regulations.

.7 Recycling: Separate, store, protect, and handle at the site identified recyclable waste products in order to prevent contamination of materials and to maximize recyclability of identified materials. Arrange for timely pickups from the site or deliveries to recycling facility in order to prevent contamination of recyclable materials.

.8 Reuse of Materials On-Site: Set aside, sort, and protect separated *Products* in preparation for reuse.

.9 Salvage: Set aside, sort, and protect *Products* to be salvaged for reuse off-site.

5.03 WASTE DISPOSAL

.1 *Contractors* are required to conform to the Waste Management Plan and implement throughout the *Project* a materials source separation program to collect re-usable and recyclable materials in an orderly fashion for diversion from the general waste stream and alternative disposal at appropriate materials recycling and re-use facilities. The *Contractor* will provide appropriate on-site disposal bins.

.2 Collect and separate packaging for disposal at recycling facilities. Include paper, plastic, polystyrene, corrugated cardboard, metal banding, and other recyclable packaging materials.

5.04 ENVIRONMENTAL PROTECTION

.1 Dispose of unused adhesive, sealant, volatile materials such as mineral spirits, oil or paint thinner, and other volatile materials which could be hazardous to the health, including empty containers, at an official hazardous materials collection site in strict accordance with the requirements of the authorities having jurisdiction and in a manner which will protect construction personnel, visitors to the site, and the public from all such hazards.

.2 Do not permit such materials to enter waterways, storm or sanitary sewers; do not dispose onto ground or other location that might pose a health or environmental hazard. Do not bury or burn rubbish and waste materials on site.

END OF SECTION 01 74 19

This page intentionally left blank

SECTION 01 78 00
CLOSEOUT SUBMITTALS

Part 1 General

1.01 OPERATION AND MAINTENANCE MANUAL

.1 On completion of the *Project,* prepare for the *Owner* three (3) hard copies and one (1) digital copy on a USB drive of an Operation and Maintenance Manual, made up as follows:

- .1 Bind data in a vinyl hard covered, 3 ring loose leaf binder for 216 mm x 279 mm (8-1/2" X 11") size paper.
- .2 Include a title sheet, labelled "Operation Data and Maintenance Manual", *Project* name, and date.
- .3 Include a list of contents.
- .4 Organize the contents into applicable sections of work to parallel the *Project Specifications* break-down. Mark each section by labelled tabs protected with celluloid covers fastened to hard paper dividing sheets.
- .5 Neatly type lists and notes. Use clear *Drawings*, diagrams and manufacturers' literature.

.2 Include the following information plus the data specified:

- .1 Maintenance instructions for finished surfaces and materials.
- .2 Copies of hardware and paint schedules.
  Description, operation and maintenance instructions for equipment and systems, including a complete list of equipment and parts lists.
- .3 Indicate the nameplate information such as make, size, capacity and serial number.
- .4 Names and addresses of *Subcontractors* and *Suppliers*, including names and phone numbers of contact personnel and 24-hour emergency telephone contacts.
- .5 Guarantees, warranties and bonds showing:
  - .1 The name and address of the *Project.*
  - .2 Warranty commencement date (date of *Ready-For-Takeover* of the *Contract*).
  - .3 Duration of guarantee.
  - .4 Clear indication of what is being guaranteed and what remedial action will be taken under the guarantee.
  - .5 Signature and seal of the *Contractor.*
- .6 Additional materials and *Products* used in the *Project*, listed under various Sections showing the names of the manufacturers and sources of supply.

.3 The *Contractor's* preliminary *s*ubmission:

- .1 Submit one copy of the completed documents 15 days prior to final inspection:
  - .1 This copy will be reviewed and returned after final inspection, with *Consultant* comments.
  - .2 Revise the content of all document sets as required prior to the final submission.

.4 The *Contractor's* final submission:

- .1 Submit final documents within 10 days after final inspection.
- .2 Provide 3 copies together with a digital copy in .pdf format on a clearly labelled USB drive of the entire Operation and Maintenance Manual.

Organize and present each hardcopy in accordance with the requirements specified above.

.3 Include the requirements of all divisions of the *Specifications* in compiling the maintenance manuals.

.4 Include:

.1 One complete set of final *Shop Drawings* (bound separately) indicating corrections and changes made during fabrication and installation.

.2 A complete set of warranties and maintenance service agreements.

.5 Include a digital copy of the demonstration and instruction vdeo in a self-contained watchable format on a clearly labelled USB drive.

.5 Operation and Maintenance Manual is part of the *Contract.* 5% of the *Contract* price will be held in a deficiency fund until all documents have been received and accepted by the *Consultant.*

1.02 WARRANTIES

.1 Provide duplicate notarized copies of warranties called for in Div 01*, General* and *Supplementary* conditions of the contract.

.2 Refer to individual sections of the *Specifications* for specific requirements of the warranties.

.3 For the *Work* of this *Project,* the one-year warranty prescribed in the *General Conditions* of the *Contract* is extended to two years, except where a longer extension of the warranty period is specified in the applicable *Specifications* section.

.4 Execute and assemble transferable warranty documents from *Subcontractors, Suppliers,* and manufacturers.

.5 Provide a Table of Contents and assemble for inclusion in the Operation and Maintenance Manual.

.6 Submit warranties immediately after the issuance of the Certificate of *Ready-For-Takeover* to facilitate release of holdback monies.

.7 For items of work delayed beyond the date of *Ready-For-Takeover,* provide an updated submittal within ten (10) days after acceptance, listing the date of acceptance as the start of the warranty period.

.8 If the validity of an extended warranty is related to proper maintenance and servicing of equipment, etc., provide full details in thmaintenance manuals.

1.03 MAINTENANCE SERVICE

.1 Furnish service and maintenance of components indicated in the applicable *Specifications* sections for the specified time period commencing on the date of *Ready-For-Takeover*.

.2 Examine system components at a frequency consistent with reliable operation. Clean, adjust, and lubricate as required.

.3 Include systematic examination, adjustment, and lubrication of components. Repair or replace parts whenever required. Use parts produced by the manufacturer of the original component.

.4 Maintenance service shall not be assigned or transferred to any agent or *Subcontractor* without the *Owner's* prior written consent.

1.04 AS-BUILT AND PROJECT RECORD DRAWINGS

.1 As-Built *Drawings* by the *Contractor*:

.1 The *Consultant* will provide one set of blackline prints for recording as-built conditions.

.2 Maintain the as-built *Drawings* and record accurately significant deviations from the *Contract Documents* caused by site conditions.

.3 Mark changes in red ink.

.4 Where applicable, record the following information:

.1 Depths of various elements of foundations in relation to finish ground floor.

.2 Horizontal and vertical locations of underground utilities and appurtenances referenced to a permanent surface improvement.

.3 Locations of internal utilities and appurtenances concealed in the construction, referenced to visible and accessible features of the structure.

.4 Field changes of dimension and detail.

.2 *Project* record *Drawings* by the *Consultant* and Sub-Consultants:

.1 At the completion of the *Project,* the *Consultant* and the specialist sub-consultants will incorporate the information provided by the *Contractor*and the changes made by *Change Order*, additional Instruction or order for minor change in the *Work* into the electronic drawing files.

.2 The revised electronic drawing files will become the *Project* record *Drawings.*

1.05 SPARE PARTS AND MAINTENANCE MATERIALS

.1 Quality:

.1 Spare parts, maintenance materials and special tools provided shall be new, not damaged or defective, and of the same quality and manufacture as *Products* provided in the *Work.*

.2 If requested, furnish evidence as to type, source and quality of *Products* provided.

.3 Defective materials and *Products* will be rejected, regardless of previous inspections. Replace materials and *Products* at no additional cost to the *Contract.*

.2 Transportation: Pay costs of transportation.

.3 Storage, handling and protection:

.1 Store spare parts, maintenance materials and special tools in a manner which will prevent damage, or deterioration.

.2 Store in original and undamaged condition with the manufacturer's seals and labels intact.

.3 Store components subject to damage from weather in weatherproof enclosures.

.4 Store paints and freezable materials in a heated and ventilated room.

.5 Remove and replace damaged *Products* at no additional cost to the *Contract* and to the *Consultant's* satisfaction.

.4 Spare parts:
- .1 Provide spare parts in quantities specified in the individual *Specifications* sections.
- .2 Provide items of the same manufacture and quality as items in the *Work.*
- .3 Deliver to the *Project* Site, place and store where directed by the *Consultant.*
- .4 Receive and catalogue all items. Submit an inventory listing to the *Consultant.* Include the accepted listings in the operation and maintenance manual specified herein.
- .5 Obtain receipts for delivered *Products* and submit receipts prior to final payment.

.5 Maintenance materials:
- .1 Provide maintenance and extra materials in quantities specified in individual *Specifications* sections.
- .2 Provide items of same the manufacture and quality as the items in the *Work*.
- .3 Provide materials from the same production run as installed materials.
- .4 Deliver to the *Project* Site, place and store where directed by the *Consultant.*
- .5 Receive and catalogue all items. Submit an inventory listing to the *Consultant.* Include the approved listings in the operation and maintenance manual specified herein.
- .6 Obtain receipts for delivered *Products* and submit receipts prior to final payment.

.6 Special tools:
- .1 Provide special tools in quantities specified in the individual *Specifications* Sections.
- .2 Provide items with tags identifying their function and the equipment with which they are associated.
- .3 Deliver to the *Project* Site, place and store where directed by the *Consultant*.
- .4 Receive and catalogue all items. Include the accepted listings in the operation and maintenance manual specified herein.

END OF SECTION 01 78 00

SECTION 01 79 00
DEMONSTRATION AND TRAINING *

Part 1 General

1.01 ADMINISTRATIVE REQUIREMENTS

.1 Demonstrate the operation and maintenance of equipment and systems to the *Owner's* personnel two weeks prior to the date of *Ready-For-Takeover*.

.2 The *Owner* will provide a list of personnel to receive instructions, and coordinate their attendance at agreed-upon times.

.3 Preparation:

- .1 Verify that conditions for demonstration and instructions comply with requirements.
- .2 Verify that designated personnel are present.
- .3 Ensure equipment has been inspected and put into operation in accordance with the requirements of the respective *Specifications* sections.
- .4 Ensure testing, adjusting, and balancing has been performed and equipment and systems are fully operational.

.4 Demonstration and instructions:

- .1 Demonstrate start-up, operation, control, adjustment, trouble-shooting, servicing, and maintenance of each item of equipment at agreed upon times, at the equipment location.
- .2 Instruct personnel in phases of operation and maintenance using operation and maintenance manuals as the basis of instruction.
- .3 Review the contents of manual in detail to explain aspects of operation and maintenance.
- .4 Prepare and insert additional data in the operation and maintenance manuals when needed during instruction.
- .5 Perform training as required to fully inform the *Owner's* personnel regarding the correct operation and maintenance of each item of equipment.

1.02 ACTION AND INFORMATIONAL SUBMITTALS

.1 Two weeks prior to the designated dates, submit for the *Owner's* approval a schedule of the time and date for the demonstration of each item of equipment and each system.

.2 Submit reports within one week after completion of the demonstration, confirming that demonstration and instructions have been satisfactorily completed.

- .1 Give the time and date of each demonstration, with list of persons present.

.3 Provide copies of completed operation and maintenance manuals for use in demonstrations and instruction.

1.03 QUALITY ASSURANCE

.1 When specified in individual *Specifications* sections and/or when necessary for the proper and complete training of the *Owner's* personnel, arrange with the manufacturer to provide an authorized representative to demonstrate operation of equipment and systems:

.2 Instruct the *Owner's* personnel.

.3 Provide written report confirming that demonstration and instruction has been completed.

END OF SECTION 01 79 00

SECTION 01 91 00
COMMISSIONING *

Part 1 General

1.01 QUALITY ASSURANCE

.1 Provide testing organization services under the provisions specified in Section 014500 - Quality Control and as required by Div 01, General and Supplementary Conditions of the Contract and the individual *Specifications* sections.

.2 Testing organization: An independent testing and inspection agency which is a member in good standing of AABC and/or the appropriate professional certification association and is acceptable to the *Consultant* and the *Owner.*

.3 Perform *Services* under the direction of a supervisor qualified under the certification requirements of the professional association.

.4 The *Contractor* is to hire a commissioning agent to be responsible for the coordination, start up and verification of all systems under all divisions of the *Specifications.* A final report to be issued confirming that all *Specifications* requirements for mechanical and electrical work have been met, systems have been balanced, set points, interlocks, timers etc. have been set, and systems are functional and are coordinated with other systems. The cost of the commissioning agent is part of the *Contractor's* general conditions and is not paid out of testing and inspection allowances.

1.02 REFERENCES

.1 Associated Air Balance Council (AABC): National Standards For Field Measurements and Instrumentation, Total Systems Balance, Air Distribution-Hydronics Systems.

1.03 SUBMITTALS

.1 Prior to start of *Work*, submit the name of the organization proposed to perform *Services*. Designate who has managerial responsibilities for coordination of the entire testing, adjusting and balancing.

.2 Submit documentation to confirm the organization's compliance with quality assurance provisions.

.3 Submit specimen electronic copies of each of the report forms proposed for use.

.4 Fifteen (15) days prior to *Ready-For-Takeover*, submit three (3) copies of the final reports on the applicable forms.

.5 Submit reports of testing, adjusting, and balancing postponed due to seasonal, climatic, occupancy, or other reasons beyond the *Contractor's* control, promptly after execution of those *Services*.

1.04 PROCEDURES - GENERAL

.1 Comply with the procedural standards of the professional certifying association under whose standard the *Services* will be performed.

.2 Notify the *Consultant* three (3) days prior to beginning of operations.

.3 Accurately record data for each step.

.4 Report to the *Owner* and *Consultant* deficiencies or defects noted during the performance of the *Services*.

1.05 FINAL REPORTS

.1 The organization having managerial responsibility shall make the reports.

.2 Ensure each form bears the signature of the recorder, and that of the supervisor of the reporting organization.

.3 Identify each instrument used, and the latest date of calibration of each.

1.06 CONTRACTOR RESPONSIBILITIES

.1 Prepare each system for testing and balancing.

.2 Cooperate with the testing organization and provide access to equipment and systems.

.3 Provide personnel and operate systems at designated times, and under conditions required for proper testing, adjusting, and balancing.

.4 Notify the testing organization and the commissioning agent seven (7) days prior to the time the *Project* will be ready for testing, adjusting, and balancing.

1.07 PREPARATION

.1 Provide instruments required for testing, adjusting, and balancing operations.

.2 Make instruments available to the *Consultant* to facilitate spot checks during testing.

.3 Retain possession of the instruments and remove at the completion of *Services*.

.4 Verify that the systems installation is complete and in continuous operation.

.5 Verify that lighting is turned on when lighting is included in the cooling load.

.6 Verify equipment such as computers, laboratory and electronic equipment are in full operation.

1.08 EXECUTION

.1 Test equipment; balance distribution systems; and adjust devices for HVAC systems.

.2 Test hydronic systems, adjust and record liquid flow at each piece of equipment.

1.09 SCHEDULE OF SYSTEMS REQUIRING TESTING, ADJUSTING, AND BALANCING SERVICE

.1 See the mechanical and electrical *Specifications* for requirements.

END OF SECTION 01 91 00

SECTION 03 35 10.00
CONCRETE FLOOR FINISHING

PART 1 GENERAL

1.01 RELATED DOCUMENTS

.1 *Drawings* and general provisions of the *Contract,* including General and Supplementary Conditions and Division 01 *Specifications* sections, apply to this section.

1.02 SUMMARY OF WORK

.1 *Work* Included: The *Work* of this section includes the provision of all labour, materials, equipment and *Services* required to provide concrete floor finishes, as indicated on the *Drawings*, as specified herein and as required for a complete *Project.*

1.03 RELATED REQUIREMENTS

.1 Cast in Place Concrete

.1 Finishing of concrete surface to tolerance; floating, trowelling, and similar operations; curing.

.2 Section 09 91 00 - Painting *

1.04 REFERENCE STANDARDS

.1 ASTM C171 - Standard Specification for Sheet Materials for Curing Concrete 2020.

.2 ASTM D2240 - Standard Test Method for Rubber Property-Durometer Hardness 2015 (Reapproved 2021).

.3 CSA A23.1/A23.2 - Concrete Materials and Methods of Concrete Construction / Test Methods and Standard Practices for Concrete 2019.

.4 WHMIS - Workplace Hazardous Materials Information System Current Edition.

1.05 SUBMITTALS

.1 Refer to Division 01, General and Supplementary conditions of the Contract for submittal procedures.

.2 *Project* Data:

.1 Manufacturer's published data on each finishing *Product*, including information on the compatibility of different *Products* and limitations.

.2 Include manufacturers' material safety data sheets for the safe handling of materials and *Products* in accordance with Workplace Hazardous Materials Information System (WHMIS) requirements.

.3 Installer Qualifications

.4 Maintenance Data:

.1 Provide data on maintenance and renewal of concrete floor finishes for inclusion in the operation and maintenance manual specified in Division 01, General and Supplementary conditions of the Contract.

.2 Include manufacturer's recommended cleaning *Products*.

1.06 MOCK-UP

.1 Construct minimum 5 m^2 mock-up area of the polished concrete floor finish under conditions similar to those that will exist during application.

.2 Locate where directed.

.3 The mock-up will be used to judge workmanship, concrete substrate preparation, operation of equipment, material application, and shine.

.4 Allow 24 hours for inspection of the mock-up before proceeding with the *Work.*

.5 When accepted, the mock-up will demonstrate the minimum standard of quality required for this *Work*.

.6 The mock-up will demonstrate the following characteristics of the finished installation:

.1 Finished surface.

.7 The accepted mock-up may remain as part of the *Work;* remove rejected mock-ups and dispose of materials.

1.07 QUALITY CONTROL

.1 Installer Qualifications: A firm with a minimum of three (3) years documented experience in concrete surface preparation, grinding, edging, chemical application, honing, and polishing, of the type specified for this Project.

1.08 PRE-INSTALLATION MEETING

.1 Convene a pre-installation meeting to verify *Project* requirements, manufacturer's installation instructions and manufacturer's warranty requirements, with the following present:

.1 *Contractor*
.2 *Consultant*.
.3 *Contractor*
.4 Cast-in place concrete contractor.
.5 Finished concrete flooring contractor (applicator).
.6 Other trades whose work affects or is affected by the *Work* of this section.

.2 Review the following:

.1 Environmental requirements.
.2 Scheduling and phasing of the work.
.3 Coordinating with other work and personnel. Remind all construction personnel that they are working on a surface that is to become a finished surface.
.4 Protection of adjacent surfaces.
.5 Surface preparation.
.6 Repair of defects and defective work prior to installation.
.7 Cleaning.
.8 Application of sealing / densifier *Products*.
.9 Protection of finished surfaces after installation.
.10 Placing of materials on the concrete surface that may cause staining, etching or scratching

1.09 DELIVERY, STORAGE, AND HANDLING

.1 Delivery: Deliver materials in manufacturer's original packaging with identification labels and seals intact and including application instructions.

.2 Store materials protected from exposure to harmful weather conditions and at temperature conditions recommended by the manufacturer.

1.10 SITE CONDITIONS

.1 Maintain light level equivalent to a minimum 200 W light source at 2.5 m above the floor surface over each 6 m^2 area of floor being finished.

.2 Maintain environmental conditions (temperature, humidity, and ventilation) within ther limits recommended by the manufacturer for optimum results. Do not install *Products* under environmental conditions outside the manufacturer's recommended limits.

.3 Protection of Concrete Slab:

.1 Protect from petroleum stains during construction.
.2 Diaper hydraulic power equipment.
.3 Restrict vehicular parking.
.4 Restrict use of pipe cutting machinery.
.5 Restrict placement of reinforcing steel on the slab.
.6 Restrict use of acids or acidic detergents on the slab.

.4 Do not finish floors until the interior heating system is operational.

1.11 WASTE MANAGEMENT AND DISPOSAL

.1 Cooperate with the Waste Management Coordinator in the implementation of the Waste Management Plan specified in Division 01 - General Conditions.

.2 Handle and dispose of waste materials, including packaging materials, generated by the *Work* of this section in accordance with the Waste Management Plan.

1.12 FINISHES

.1 Schedule of slab finishes:

.1 Generally: Smooth trowel finish.

.2 Schedule of final floor finishes, refer to *Drawings* for lcoations:

.1 CONC: Apply seal / densifier compound, fill saw cuts.

1.13 WARRANTY

.1 Manufacturer's Warranty: Submit, for the *Owner's* acceptance, a manufacturer's standard warranty document executed by an authorized company official. The Manufacturer's warranty is in addition to, and does not limit, other rights the *Owner* may have under the *Contract Documents.*

PART 2 PRODUCTS

2.01 MANUFACTURER

.1 This specification is based on the specified *Products.*

.2 Requests for *Substitutions* will be considered in accordance with the provisions of Division 01, General and Supplementary conditions of the Contract.. Acceptance of alternative *Products* is subject to the approval of the *Consultant.*

.3 Verify the compatibility of all products with the respective manufacturers before application

2.02 SURFACE TREATMENTS

.1 Joint Filler: Semi-rigid, 2-component, self-levelling, 100% solids, rapid curing, polyurea polymer liquid control joint and crack filler which cures to ASTM D2240 Shore A 84 or higher hardness. Standard of acceptance: Euco Qwikjoint UVR

.2 Water-based penetrating sealing / densifier compound: Standard of acceptance: EUCO Diamond Hard by Euclid Chemical.

PART 3 EXECUTION

3.01 EXAMINATION

.1 Examine areas and conditions under which the *Work* is to be performed and notify the *Consultant* in writing of conditions detrimental to the proper and timely completion of the *Work.*

.2 Verify that floor surfaces are acceptable to receive the *Work* of this section.

.3 Verify that flaws in concrete have been patched and joints filled with methods and materials suitable for further finishes.

.4 Do not proceed with the work until unsatisfactory conditions have been corrected to the satisfaction of the installer.

.5 Commencement of the installation will be construed as acceptance of the site conditions and, thereafter, the *Contractor* shall be fully responsible for satisfactory work as specified herein.

3.02 GENERAL

.1 Finish floors and slabs in general conformance with CSA A23.1/A23.2.

.2 Apply *Products* in accordance with the manufacturers' instructions.

.3 Arrange for technical representatives of the manufacturers to be on site during the application of their *Products.*

3.03 PREPARATION

.1 Ensure that construction personnel are properly equipped with appropriate protective equipment in accordance with the Material Safety Data Sheets for each *Product*.

.2 Cure the concrete by a wet or sheet cure method, in accordance with ASTM C171.

.1 Concrete should cure seven days or longer before application of product.

.3 Provide appropriate protection to adjacent surfaces against splash, overspray, residue and wind drift.

.1 Take special care to protect glass or other finished surfaces from contact with sealing/densifier compound.

.2 If contact does occur, immediately wipe with a damp cloth or flush the affected surface.

.3 When applying near glazing, mask the glass.

.4 Verify that the *Products* to be used are fully compatible - refer to section

3.04 FLOOR JOINT FILLER

.1 Apply and install joint filler as specified in manufacturer's instructions.

.2 Prepare all joints to be filled:

.1 Joints to be clean and dry.

.2 Any and all oil, dirt debris or any other material that may be a bond breaker must be removed prior to application.

.3 Final step before application of joint filler completely remove all residue by using compressed air or by re-cutting of the joint, followed by vaccuming.

.4 All joint facing must possess an open surface texture.

.3 Product must be filled full depth of the joint or crack. Do not use backer rod or other fill material for the purpose of reducing volume.

3.05 SEALING / DENSIFIER APPLICATION (FINISH CONC)

.1 For Finish CONC, apply penetrating sealing / densifier compound in accordance with the manufacturer’s instructions.

.1 Apply only when site conditions are within the manufacturer’s prescribed limits.

.2 Do not apply until the bleed water on the slab surface has evaporated and the surface is hard enough not to be marred during sealing / densifier compound application.

.3 Clean concrete surface of any laitance formed on the surface, and allow concrete to air dry for a minimum of 24 hours prior to application.

.2 Apply sealing / densifier compound at the manufacturer’s recommended coverage rate using low-pressure, high-volume pump.

.1 Control the coverage rate by measuring the area to be sealed and measuring the corresponding volume of the curing / sealing compound based on the recommended coverage rate.

.2 Work the compound into the concrete surface with a soft-bristle broom.

.3 Maintain a wet surface for a minimum of 30 minutes, add additional product if necessary to maintain a wet surface.

.4 Do not track product onto untreated concrete, as permanent footprints or tire marks can result.

.5 As product begins to thicken and gel, lightly spray the area with clean water to break up the thickened product and move the excess material onto the adjacent floor area that is next to be treated.

.6 Do not allow excess product to dry on the concrete surface, if a white residue forms remediation by mechanical means such as grinding or sanding will be required.

.3 Protect surface and allow sealer to cure for a minimum of 24 hours.

3.06 ADJUSTMENTS

.1 Make good surfaces not matching the reviewed and accepted mock-up, to the *Consultant's* satisfaction.

3.07 FINAL CLEANING

.1 Remove from the premises all surplus material, equipment, dirt and debris caused by the *Work* of this section and leave the installation clean.

.2 Clean splash, overspray, and spills of surplus *Products* from adjacent surfaces.

.3 Make good damage to other work caused by the *Work* of this section.

3.08 PROTECTION

.1 Protect the finished surface as required and as recommended by the manufacturer of the polishing system.

END OF SECTION 03 35 10.00

SECTION 03 35 10.01
CONCRETE FLOOR FINISHING APPENDICES (6 PAGES ATTACHED)

SEE ATTACHED TECHNICAL DATA SHEETS

A
TECHNICAL DATA SHEET: EUCO DIAMOND HARD
3 Pages Attached.

B
TECHNICAL DATA SHEET: EUCO QWIKJOINT UVR
3 Pages Attached.

PENETRATING SEALERS & LIQUID DENSIFIERS

Master Format #: 03 35 00

EUCO DIAMOND HARD

LIQUID DENSIFIER AND SEALER FOR CONCRETE

EUCLID CHEMICAL

PACKAGING

5 gal (18.9 L) pail
Code: 059H 05
55 gal (208 L) drum
Code: 059H 55
275 gal (1041 L) tote
Code: 059H 27

APPROXIMATE COVERAGE

One gallon of EUCO DIAMOND HARD will cover 200 to 250 ft²/gal (4.9 to 6.1 m²/L) of steel troweled concrete depending on the surface porosity and texture.

CLEAN UP

Clean brooms, tools and all equipment and sprayers with clean water immediately after use. The residue from application and clean up process is non-toxic.

SHELF LIFE

2 years in original, unopened package

SPECIFICATIONS AND COMPLIANCES

- USGBC LEED Version 4, BD&C, ID&C
- ANSI/GBI 01, Green Building Assessment Protocol
- The WELL Building Standard
- Canadian Food Inspection Agency

DESCRIPTION

EUCO DIAMOND HARD is a unique blend of silicate and siliconate polymers that penetrate concrete surfaces and chemically react to provide an increase in surface density, durability, and abrasion resistance. Concrete treated with EUCO DIAMOND HARD is dust-proofed, resists tire marks, and is easier to maintain. Over time, EUCO DIAMOND HARD provides an attractive, slip resistant sheen to concrete that never peels, fades, or wears away.

PRODUCT CHARACTERISTICS

FEATURES/BENEFITS

- Reduces porosity and increases durability of the concrete surface
- Complies with VOC regulations across North America
- Treated surfaces have increased liquid repellency
- Equipment can be cleaned with water
- Minimizes tire marks and enables them to be more easily removed
- Can be applied to new or existing concrete

PRIMARY APPLICATIONS

- Interior or exterior
- Warehouse floors
- Commercial and retail floors
- Manufacturing plants
- Distribution centers
- Diamond polishing concrete

APPEARANCE

EUCO DIAMOND HARD is a clear, water-based liquid that cures without a significant change in concrete appearance. During placement, the color of the concrete may initially appear darker but will lighten upon drying. Tightly troweled concrete surfaces treated with EUCO DIAMOND HARD will achieve a glossy sheen over time with traffic and regular cleaning or buffing. If immediate gloss is desired, the floor may be dry buffed with a lambswool buffing pad after the sealer has cured for a minimum of 24 hours.

TECHNICAL INFORMATION

The following are typical values obtained under laboratory conditions. Expect reasonable variation under field conditions.

Test Method	Test Property	Values
-	VOC Content	≤ 5 g/L
-	Drying Time at 70 °F (21 °C)	Light Foot Traffic: 4 to 6 hours Wheel Traffic: 24 hours
ASTM F609	Coefficient of Friction	Untreated Control (Wet/Dry): 0.78/0.77 Euco Diamond Hard (Wet/Dry): 0.74/0.77
RILEM Method 11.4	Liquid Repellency - Water absorbed in 24 hours	Untreated concrete: 5 mL Euco Diamond Hard treated concrete: 1 mL
-	Chemical Resistance	Find the chemical resistance chart on euclidchemical.com
ASTM C779	Durability Factor	See table below

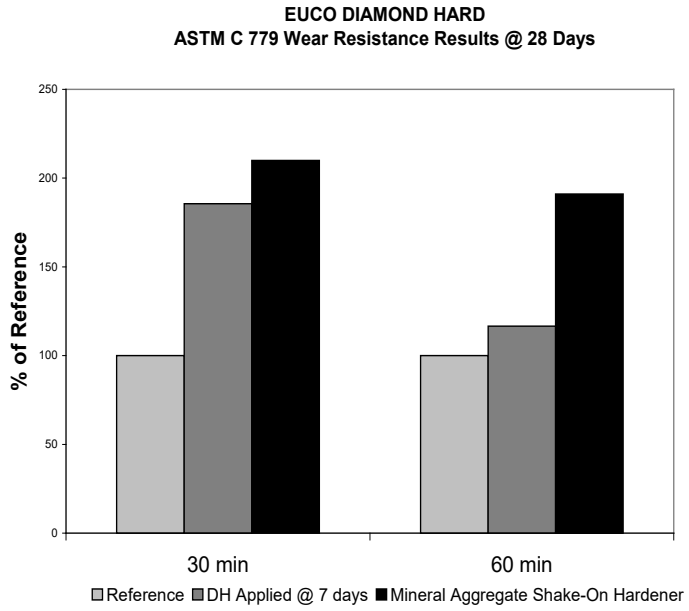

WARRANTY: The Euclid Chemical Company ("Euclid") solely and expressly warrants that its products shall be free from defects in materials and workmanship for one (1) year from the date of purchase. Unless authorized in writing by an officer of Euclid, no other representations or statements made by Euclid or its representatives, in writing or orally, shall alter this warranty. EUCLID MAKES NO WARRANTIES, IMPLIED OR OTHERWISE, AS TO THE MERCHANTABILITY OR FITNESS FOR ORDINARY OR PARTICULAR PURPOSES OF ITS PRODUCTS AND EXCLUDES THE SAME. If any Euclid product fails to conform with this warranty, Euclid will replace the product at no cost to Buyer. Replacement of any product shall be the sole and exclusive remedy available and buyer shall have no claim for incidental or consequential damages. Any warranty claim must be made within one (1) year from the date of the claimed breach. Euclid does not authorize anyone on its behalf to make any written or oral statements which in any way alter Euclid's installation information or instructions in its product literature or on its packaging labels. Any installation of Euclid products which fails to conform with such installation information or instructions shall void this warranty. Product demonstrations, if any, are done for illustrative purposes only and do not constitute a warranty or warranty alteration of any kind. Buyer shall be solely responsible for determining the suitability of Euclid's products for the Buyer's intended purposes.

DIRECTIONS FOR USE

EUCO DIAMOND HARD should be used directly from the container and requires no pre-mixing or blending.

Surface Preparation (Newly Placed Concrete): Cure the concrete by a wet or sheet cure method in accordance with ASTM C171, or with a curing compound such as KUREZ DR VOX. New concrete should cure seven days or longer before application of EUCO DIAMOND HARD. For fast track projects, the wet cure time may be reduced at the discretion of the project engineer. Remove the curing method, including any laitance formed on the surface, and allow concrete to air dry a minimum of 24 hours prior to application of EUCO DIAMOND HARD. **If a curing compound is used, it must be fully removed before applying EUCO DIAMOND HARD.** Failure to follow these preparation steps will prevent full penetration of EUCO DIAMOND HARD, drastically reducing its effectiveness.

Surface Preparation (Existing/Older Concrete): Concrete that is already in service or older floors must be clean and free of any materials that could prevent penetration of EUCO DIAMOND HARD, such as curing compounds or cure & seals, paints, coatings, dirt/oil, waxes, etc. If necessary, use EUCO CLEAN & STRIP to remove these contaminants before applying EUCO DIAMOND HARD.

Application (New or Old Concrete): Air temperature during application must be between 35 and 100 °F (2 and 38 °C). At temperatures below 50 °F (10 °C), the reaction and "gelling" process of EUCO DIAMOND HARD is slower, so the concrete will need to remain wet with EUCO DIAMOND HARD for a longer period of time. In hot or windy conditions, the reaction may take less than the normal 30 to 60 minute period. Concrete should be pre-dampened in hot weather; apply EUCO DIAMOND HARD when all standing water has disappeared. Apply the EUCO DIAMOND HARD to the concrete surface by low pressure sprayer or by pouring directly onto the surface and distributing evenly by broom or squeegee. With soft bristle hand brooms or brushes on an auto-scrubber, work the EUCO DIAMOND HARD around the area to be treated and into the surface. The concrete must be kept wet with EUCO DIAMOND HARD for at least 30 minutes - add additional EUCO DIAMOND HARD if necessary to maintain a wet surface. As the EUCO DIAMOND HARD begins to thicken and gel underfoot, lightly spray the area with clean water to break up the thickened EUCO DIAMOND HARD and move the excess material on to the adjacent floor area next to be treated. Do not track EUCO DIAMOND HARD onto untreated concrete, as permanent footprints or tire marks can result. Continue the application process until the entire floor has been treated. When finished, completely remove all excess EUCO DIAMOND HARD from the surface. **If excess EUCO DIAMOND HARD is allowed to dry on the concrete surface, a white residue will form that can only be removed by mechanical means such as grinding or sanding. Prevent this by completely removing all excess EUCO DIAMOND HARD from the surface when application is complete.**

Floor Joints: If the floor joints are to be filled after EUCO DIAMOND HARD has been applied, they must be thoroughly cleaned before installation of joint filler. Cleaning joints by circular concrete saw or a drill equipped with a wire wheel is recommended.

Maintenance: See the "Euco Diamond Hard Maintenance Guide" for recommended maintenance procedures.

PRECAUTIONS/LIMITATIONS

- Protect containers of EUCO DIAMOND HARD from freezing. In the event of freezing, thaw and stir or agitate before use.
- EUCO DIAMOND HARD is not recommended for use as a curing compound. It does not meet the requirements of ASTM C309 or ASTM C1315.
- Protect freshly applied EUCO DIAMOND HARD from rain for at least 12 hours after application
- Although EUCO DIAMOND HARD has successfully demonstrated resistance to common chemicals in laboratory testing, the in-place performance will depend on surface porosity, application rate, chemical exposure and dwell time. If chemical resistance is of concern, a concrete sample treated with EUCO DIAMOND HARD should be constructed on the jobsite and subjected to the anticipated chemical exposure to verify in-place performance. This performance should be verified and approved by the owner prior to installation.
- Protect all adjacent surfaces including metals, glass, wood, paint or brick from contact with EUCO DIAMOND HARD. If accidentally over sprayed, wash adjacent surfaces with potable water immediately.
- Waste resulting from EUCO DIAMOND HARD application must be disposed of in accordance with local regulations.
- In all cases, consult the Safety Data Sheet before use.

Rev. 01.22

WARRANTY: The Euclid Chemical Company ("Euclid") solely and expressly warrants that its products shall be free from defects in materials and workmanship for one (1) year from the date of purchase. Unless authorized in writing by an officer of Euclid, no other representations or statements made by Euclid or its representatives, in writing or orally, shall alter this warranty. EUCLID MAKES NO WARRANTIES, IMPLIED OR OTHERWISE, AS TO THE MERCHANTABILITY OR FITNESS FOR ORDINARY OR PARTICULAR PURPOSES OF ITS PRODUCTS AND EXCLUDES THE SAME. If any Euclid product fails to conform with this warranty, Euclid will replace the product at no cost to Buyer. Replacement of any product shall be the sole and exclusive remedy available and buyer shall have no claim for incidental or consequential damages. Any warranty claim must be made within one (1) year from the date of the claimed breach. Euclid does not authorize anyone on its behalf to make any written or oral statements which in any way alter Euclid's installation information or instructions in its product literature or on its packaging labels. Any installation of Euclid products which fails to conform with such installation information or instructions shall void this warranty. Product demonstrations, if any, are done for illustrative purposes only and do not constitute a warranty or warranty alteration of any kind. Buyer shall be solely responsible for determining the suitability of Euclid's products for the Buyer's intended purposes.

JOINT FILLERS & SEALANTS
Master Format #: 07 92 16

EUCO QWIKJOINT UVR

UV-RESISTANT POLYUREA FLOOR JOINT FILLER

EUCLID CHEMICAL

PACKAGING

10 gal (37.9 L) unit
Code: 692NB 10 (Neutral Base)
Code: 693HP 10 (Standard Gray)
Code: 692§ 10 (Colors)
22 oz cartridge (600 mL), case of 12
Code: 692§ 94 (Colors)

APPROXIMATE COVERAGE

1 gallon (3.79 L) of EUCO QWIKjoint UVR yields 231 in³ (3785 cm³) of material. One 22 oz (600 mL) cartridge yields 40 in³ (655 cm³) of material. 6 cartridges equal approximately 1 gallon of material.

CLEAN UP

EUCO SOLVENT or acetone may be used for clean-up of tools and equipment. Clean excess material before EUCO QWIKjoint UVR has cured. Cured material will require removal by mechanical means.

SHELF LIFE

1 year in original, unopened package

SPECIFICATIONS AND COMPLIANCES

- Complies with ACI 302 performance recommendations regarding control and construction joint fillers.
- USGBC LEED Version 4, BD&C, ID&C
- The WELL Building Standard
- ANSI/GBI 01, Green Building Assessment Protocol

DESCRIPTION

EUCO QWIKjoint UVR represents a new generation of polyurea technology with features and benefits unlike any other polyurea joint filler on the market. EUCO QWIKjoint UVR resists fading from ultraviolet light greater than any existing product. It is a fast-setting, semi-rigid polyurea, primarily used for filling construction and control joints in industrial and commercial concrete floors. EUCO QWIKjoint UVR can be shaved flush with the floor shortly after placement or up to 24 hours later. EUCO QWIKjoint UVR supports and protects joint edges from heavy loads and wheel traffic, reducing spalling of the joint edges. EUCO QWIKjoint UVR is available in 33 standard colors and in a Neutral Base, that can be colored on site with EUCLID UNIVERSAL COLOR PACKS; available in the same 33 colors.

PRODUCT CHARACTERISTICS

FEATURES/BENEFITS

- Unparalleled UV resistance
- Fast setting formula reduces downtime
- Large shave-time window allows for greater flexibility in scheduling joint filling operations
- Tough performance reduces floor joint repairs and maintenance
- Will cure in temperatures as low as -20 °F (-29 °C)
- No bubbles/foaming when used in damp joints
- Less moisture-sensitive than standard polyureas
- Available in 33 standard colors

PRIMARY APPLICATIONS

- Concrete construction & control joints
- Crack and joint repair for old floors
- Industrial and commercial floors
- Freezer floors

APPEARANCE

EUCO QWIKjoint UVR is available in 33 standard colors and in a Neutral Base that can be colored on site using EUCLID UNIVERSAL COLOR PACKS, which are available in the same 33 standard colors. See the EUCLID UNIVERSAL COLOR CHART for available colors. The user should expect some batch to batch variability in color. If possible, "box" the Part B after pre-stirring each pail to ensure color uniformity.

COVERAGE

The following table gives rough guidelines on estimating the amount of material needed. These numbers represent the length of joint that can be filled with 1 gallon (3.79 L) of material, based on the joints' width and depth.

	Joint Depth				
Joint Width	**1"**	**1.5"**	**2"**	**2.5"**	**3"**
3/32" (2.4 mm)	205 ft (62.5 m)	136 ft (41.5 m)	102 ft (31.1 m)	82 ft (25.0 m)	68 ft (20.7 m)
1/8" (3.2 mm)	154 ft (46.9 m)	102 ft (31.1 m)	77 ft (23.5 m)	61 ft (18.6 m)	51 ft (15.5 m)
3/16" (4.8 mm)	102 ft (31.1 m)	68 ft (20.7 m)	51 ft (15.5 m)	41 ft (12.5 m)	34 ft (10.4 m)
1/4" (6.4 mm)	77 ft (23.5 m)	51 ft (15.5 m)	38 ft (11.6 m)	30 ft (9.1 m)	25 ft (7.6 m)
3/8" (9.5 mm)	51 ft (15.5 m)	34 ft (10.4 m)	25 ft (7.6 m)	20 ft (6.1 m)	17 ft (5.2 m)
1/2" (12.7 mm)	38 ft (11.6 m)	25 ft (7.6 m)	19 ft (5.8 m)	15 ft (4.6 m)	12 ft (3.7 m)

TECHNICAL INFORMATION

The following are typical values obtained under laboratory conditions. Expect reasonable variation under field conditions.

Test Method	Test Property	Values
-	Gel Time	25-30 seconds
ASTM D2240	Shore D Hardness	34 to 36
ASTM D2240	Shore A Hardness	84 to 88
ASTM D412	Tensile Strength @ 7 days	660 psi (4.6 MPa)
ASTM D412	Elongation @ 7 days	220% to 260%
-	Shave "Window"	1 to 24 hours
-	Tack-Free Time	3 to 4 minutes
-	Traffic Ready Time	Light Traffic: 1 hour Heavy Traffic: 2 hours
ASTM D4541	Adhesion to Concrete @ 7 days	250 psi (1.7 MPa)
ASTM D2196	Viscosity	Part A: 2000 cp Part B: 1800 cp
-	Mix Ratio	1:1

Chemical Resistance ASTM D1308	
Acetic Acid, 10%	No effect
Alcohol, 10%	No effect
Ammonium Hydroxide, 10%	No effect
Brake Fluid	Swelled, softened
Diesel Fuel	Discolored
Ethylene Glycol (antifreeze)	No effect
Gasoline	Stained
Hydrochloric Acid, 20%	Slight swelling
JP-4 Jet Fuel	No effect
Used Motor Oil	Stained
Salt Water	No effect
Sodium Hydroxide, 10%	Slightly discolored
Sulfuric Acid, 10%	No effect
Xylene	No effect

WARRANTY: The Euclid Chemical Company ("Euclid") solely and expressly warrants that its products shall be free from defects in materials and workmanship for one (1) year from the date of purchase. Unless authorized in writing by an officer of Euclid, no other representations or statements made by Euclid or its representatives, in writing or orally, shall alter this warranty. EUCLID MAKES NO WARRANTIES, IMPLIED OR OTHERWISE, AS TO THE MERCHANTABILITY OR FITNESS FOR ORDINARY OR PARTICULAR PURPOSES OF ITS PRODUCTS AND EXCLUDES THE SAME. If any Euclid product fails to conform with this warranty, Euclid will replace the product at no cost to Buyer. Replacement of any product shall be the sole and exclusive remedy available and buyer shall have no claim for incidental or consequential damages. Any warranty claim must be made within one (1) year from the date of the claimed breach. Euclid does not authorize anyone on its behalf to make any written or oral statements which in any way alter Euclid's installation information or instructions in its product literature or on its packaging labels. Any installation of Euclid products which fails to conform with such installation information or instructions shall void this warranty. Product demonstrations, if any, are done for illustrative purposes only and do not constitute a warranty or warranty alteration of any kind. Buyer shall be solely responsible for determining the suitability of Euclid's products for the Buyer's intended purposes.

DIRECTIONS FOR USE

Surface Preparation: All joints to be filled must be clean and dry. All oil, dirt, debris, paint and any other material that may be a bond breaker must be removed. The final step in cleaning must be the complete removal of all residue by use of oil-free compressed air, or by re-cutting the joint, followed by vacuuming. All joint facings must possess an open surface texture with all curing compounds and sealers removed. If this product will be used for filling floor cracks, the cracks must be routed out and cleaned before filling. For proper installation, all edges must be squared off.

Joint Backing: To provide proper load transfer, EUCO QWIKjoint UVR must be filled full depth of the joint or crack. Do not use backer rod or other fill material for the purpose of reducing volume. Dried silica sand, 1/16" to 1/8" (1.5 to 3 mm), may be used to fill the crack at the bottom of the joint to prevent materal loss through the slab.

Priming: EUCO QWIKjoint UVR does not require a primer before application.

Preparation of 10 gal (37.9 L) units

Mixing: Due to its extremely fast set time, EUCO QWIKjoint UVR requires machine mixing and placing. ****Slowly pre-mix Part B separately before using with a slow speed drill and mixing paddle for 2 to 3 minutes.** Do not whip air into the Part B while mixing. Follow mechanical pump manufacturer's equipment instructions for operation.

NOTE: If EUCO QWIKjoint UVR is to be stored in the dispensing pump overnight, place a sheet of plastic wrap directly on top of the liquid material in each tank to prevent exposure to air.

Euclid Universal Color Packs: EUCO QWIKjoint UVR Neutral Base can be colored using 1 EUCLID UNIVERSAL COLOR PACK (EUCO Pack) per 10 gal (37.85 L) unit. Prior to mixing the unit together, stir the color pack into the part "B" side of the product while conducting the pre-mix as described above, until it is fully dispersed. EUCLID UNIVERSAL COLOR PACKS are available in 33 standard colors, see EUCLID UNIVERSAL COLOR CHART for available colors.

Preparation of 22 oz (600 mL) cartridges

QWIKjoint UVR cartridges must be shaken well before opening and using, as some settlement is normal during storage. Remove the threaded cartridge nut, then remove the white plastic plug from the top of the cartridge. The nut and plug can be set aside and later used to re-seal a partially used cartridge. To avoid cross contamination during re-sealing, clean the white plastic plug prior to re-inserting in the top of the cartridge. Thread the included static mixing nozzle onto the cartridge securely. Load the cartridge into a 1:1 ratio, dual-component dispensing gun, designed to accommodate 600 mL (300 mL x 300 mL) cartridges. Hold the gun with the mixing nozzle pointing straight upward, and pump EUCO QWIKjoint UVR up to the top of the static mixing nozzle. Then, tilt the gun downward and dispense the first 2 to 3 pumps (or until material appears uniform) of material into a disposable container. Discard this material. The cartridge is now prepared for the placement of EUCO QWIKjoint UVR.

Placement for 10 gal (37.9 L) units and 22 oz (600 mL) cartridges

EUCO QWIKjoint UVR must be installed in the joint full depth. Joints should be slightly overfilled and shaved smoothly with the surrounding joint edges, giving the floor joints a flat appearance. Shaving of excess EUCO QWIKjoint UVR can begin approximately 1 hour after placement, and up to 24 hours later, depending on jobsite conditions such as the concrete and ambient temperatures.

PRECAUTIONS/LIMITATIONS

- **Based on ACI 302 recommendations, joint fillers should be applied as late as possible after construction to allow for minimal additional slab shrinkage. Consult ACI 302 comments regarding concrete shrinkage, joint filling and user expectations.**
- One EUCLID UNIVERSAL COLOR PACK (EUCO Pack) may be added per 10 gal (37.85 L) unit of Neutral Base; mix into the "B" side.
- EUCO QWIKjoint UVR material and all application equipment should be kept at ambient temperatures of 50°F (10°C) or above.
- Surface and ambient temperature during applications should be between -20 °F and 90 °F (-29 °C and 32 °C)
- Do not use EUCO QWIKjoint UVR as an expansion joint sealant.
- Contact surfaces must be clean and dry for best adhesion.
- Joint edges must be thoroughly cleaned prior to filling, particularly if a floor sealer or densifier has been applied.
- Coatings may not adhere to Euco QWIKjoint UVR. If the floor is intended to receive a seamless epoxy or urethane coating, refer to our "Epoxy & Urethane Coatings Application Guide".
- Product may slightly discolor if constantly exposed to exterior UV radiation.
- In all cases, consult the Safety Data Sheet before use.

Rev. 01.22

WARRANTY: The Euclid Chemical Company ("Euclid") solely and expressly warrants that its products shall be free from defects in materials and workmanship for one (1) year from the date of purchase. Unless authorized in writing by an officer of Euclid, no other representations or statements made by Euclid or its representatives, in writing or orally, shall alter this warranty. EUCLID MAKES NO WARRANTIES, IMPLIED OR OTHERWISE, AS TO THE MERCHANTABILITY OR FITNESS FOR ORDINARY OR PARTICULAR PURPOSES OF ITS PRODUCTS AND EXCLUDES THE SAME. If any Euclid product fails to conform with this warranty, Euclid will replace the product at no cost to Buyer. Replacement of any product shall be the sole and exclusive remedy available and buyer shall have no claim for incidental or consequential damages. Any warranty claim must be made within one (1) year from the date of the claimed breach. Euclid does not authorize anyone on its behalf to make any written or oral statements which in any way alter Euclid's installation information or instructions in its product literature or on its packaging labels. Any installation of Euclid products which fails to conform with such installation information or instructions shall void this warranty. Product demonstrations, if any, are done for illustrative purposes only and do not constitute a warranty or warranty alteration of any kind. Buyer shall be solely responsible for determining the suitability of Euclid's products for the Buyer's intended purposes.

This page intentionally left blank

SECTION 04 20 00
UNIT MASONRY

PART 1 GENERAL

1.01 RELATED DOCUMENTS

.1 *Drawings* and general provisions of the *Contract*, including General and Supplementary Conditions and Division 01 *Specifications* sections, apply to this section.

1.02 SUMMARY OF WORK

.1 *Work* Included: The work of this section includes the provision of all labour, materials, equipment and *Services* required to execute unit masonry work, as indicated on the *Drawings*, as specified herein and as required for a complete *Project*.

1.03 SECTION INCLUDES

.1 Concrete unit masonry.
.2 Calcium silicate building stone units.
.3 Mortar.
.4 Reinforcement and anchorage.
.5 Flashings.
.6 Lintels.
.7 Accessories.

1.04 RELATED REQUIREMENTS

.1 Section 05 50 00 - Metal Fabrications: Loose steel lintels; lateral restraint angles.
.2 Section 07 21 00 - Board and Batt Insulation: Insulation for cavity spaces.
.3 Section 07 27 13 - Non-permeable Air/Moisture/Vapour Barrier **.
.4 Section 07 27 16 - Permeable Air/Moisture Barrier **.
.5 Section 07 62 00 - Sheet Metal Flashing and Trim: Through-wall masonry flashings.
.6 Section 07 84 01 - Firestopping.
.7 Section 07 92 00 - Joint Sealants: Sealing control and expansion joints.
.8 Section 08 11 16 - Aluminum Doors and Frames.

1.05 REFERENCE STANDARDS

.1 ASTM A123/A123M - Standard Specification for Zinc (Hot-Dip Galvanized) Coatings on Iron and Steel Products 2017.
.2 ASTM A153/A153M - Standard Specification for Zinc Coating (Hot-Dip) on Iron and Steel Hardware 2016a.
.3 ASTM A666 - Standard Specification for Annealed or Cold-Worked Austenitic Stainless Steel Sheet, Strip, Plate, and Flat Bar 2015.
.4 ASTM C73 - Standard Specification for Calcium Silicate Brick (Sand-Lime Brick) 2017.
.5 ASTM C97/C97M - Standard Test Methods for Absorption and Bulk Specific Gravity of Dimension Stone 2018.

.6 ASTM C99/C99M - Standard Test Method for Modulus of Rupture of Dimension Stone 2018.
.7 ASTM C144 - Standard Specification for Aggregated for Masonry Mortar 2018.
.8 ASTM C170/C170M - Standard Test Method for Compressive Strength of Dimension Stone 2017.
.9 ASTM C241/C241M - Standard Test Method for Abrasion Resistance of Stone Subjected to Foot Traffic 2020.
.10 ASTM C494/C494M - Standard Specification for Chemical Admixtures for Concrete 2019, with Editorial Revision (2022).
.11 ASTM C568/C568M - Standard Specification for Limestone Dimension Stone 2015.
.12 ASTM C880/C880M - Standard Test Method for Flexural Strength of Dimension Stone 2018.
.13 ASTM D1056 - Standard Specification for Flexible Cellular Materials--Sponge or Expanded Rubber 2020.
.14 ASTM E84 - Standard Test Method for Surface Burning Characteristics of Building Materials 2022.
.15 BIA Technical Notes No. 7 - Water Penetration Resistance – Design and Detailing 2017.
.16 CAN/CSA A371 - Masonry Construction for Buildings 2014 (Reaffirmed 2019).
.17 CAN/ULC S702.1 - Standard for Mineral Fibre Thermal Insulation for Buildings, Part 1: Material Specification 2021.
.18 CAN/ULC S702.2 - Standard for Mineral Fibre Thermal Insulation for Buildings, Part 2: Installation 2015.
.19 CAN/CSA A165 Series - CSA Standards on Concrete Masonry Units (Consists of A165.1, A165.2 and A165.3) 2014 (Reaffirmed 2019).
.20 CAN/CSA A179 - Mortar and Grout for Unit Masonry 2014.
.21 CAN/CSA A370 - Connectors for Masonry 2014 (Reaffirmed 2018).
.22 CSA G30.18 - Carbon Steel Bars for Concrete Reinforcement 2021.
.23 CSA S304 - Design of Masonry Structures 2014 (Reaffirmed 2019).
.24 OBC - Ontario Building Code (Regulation 332/12) 2012.
.25 ULC (FRD) - Fire Resistance Directory Current Edition.

1.06 ADMINISTRATIVE REQUIREMENTS

.1 Preinstallation Meeting: Convene a preinstallation meeting one week before starting work of this section; require attendance by all trades affected by the work of his section.

1.07 DEFINITION

.1 "Exposed" means visible in the completed *Work,* painted and unpainted.

1.08 SUBMITTALS

.1 See Division 01, General and Supplementary conditions of the Contract. for submittal procedures.

.2 *Product* Data: Provide data for masonry units, fabricated wire reinforcement, mortar, and masonry accessories.

.3 Samples: Submit:

.1 Two samples of each masonry unit to illustrate colour, texture, and extremes of colour range.

.2 One sample of each type of masonry connector.

.4 Manufacturer's Certificate: Certify that masonry units meet or exceed specified requirements.

.5 Test Reports: Concrete and masonry manufacturer's test reports for units with integral repellent admixture

1.09 QUALITY ASSURANCE

.1 Comply with provisions of CAN/CSA A371, except where exceeded by requirements of the *Contract Documents.*

.1 Maintain one copy of each document on the *Project* site.

.2 Fire Rated Assemblies: Comply with the applicable ULC (FRD) Assembly No. as shown on *Drawings*.

.1 Smoke-tight Shafts: Construct horizontal service spaces and vertical service shafts that penetrate fire separations as smoke-tight construction in compliance with the applicable building code, and the requirements of the local authority having jurisdiction.

.3 Fire Rated Assemblies: Provide concrete masonry units having void to solid ratios and concrete types as necessary to achieve the required fire ratings for the thicknesses of fire rated walls indicated.

.4 Manufacturer Qualifications: A company specializing in manufacturing the type of *Products* specified in this section with minimum ten (10) years of documented experience.

.5 Installer Qualifications: A company specializing in performing work of the type specified and with at least five (5) years of documented experience.

1.10 MOCK-UP

.1 Construct a masonry wall as a mock-up panel sized approximately 2.4 m long by 1.8 m high; include mortar, accessories, structural backup, and flashings (with lap joint, corner, and end dam) in the mock-up.

.2 Locate where directed by the *Consultant.*

.3 The mock-up may remain as part of the *Work.*

1.11 DELIVERY, STORAGE, AND HANDLING

.1 Deliver, handle, and store masonry units by means that will prevent mechanical damage and contamination by other materials.

.2 Deliver packaged *Products* in original unopened packaging with legible manufacturer's identification.

.3 Keep materials dry until use.

.4 Store masonry units on elevated platforms, under cover, and in a dry location to prevent their deterioration or damage due to moisture, temperature changes, contaminants, corrosion, and other causes. If units become wet, do not install until they are in an air-dried condition.

.5 Store cementitious materials on elevated platforms, under cover, and in a dry location.

.6 Store aggregates where grading and other required characteristics can be maintained and contamination avoided.

.7 Store masonry accessories, including metal items, to prevent corrosion and accumulation of dirt and oil.

1.12 PROJECT CONDITIONS

.1 Protection of Masonry: During erection, protect laid masonry from damage by weather. Cover partially completed masonry when construction is not in progress.

.1 At the end of each day's work or at the beginning of a shutdown period, cover tops of walls, projections, and sills with canvas or strong waterproof membrane, overhanging each side of the wall at least 600 mm and securely clamped down.

.2 Use wire spring clamps extending 200 mm down each side of the wall, spaced at 2400 mm o.c. or other method acceptable to the *Consultant .*

.2 Stain Prevention: Prevent grout, mortar, and soil from staining the face of masonry. Immediately remove grout, mortar, and soil that come in contact with masonry.

.1 Protect the base of walls from rain-splashed mud and mortar splatter by coverings spread on the ground and over wall surface.

.2 Protect sills, ledges, and projections from mortar droppings.

.3 Protect surfaces of window and door frames, as well as similar *Products* with painted and integral finishes, from mortar droppings.

.4 Turn scaffold boards near the wall on edge at the end of each day to prevent rain from splashing mortar and dirt on completed masonry.

.3 Cold-Weather Requirements:

.1 Do not use frozen materials or materials mixed or coated with ice or frost. Do not build on frozen subgrade or setting beds.

.2 Remove and replace unit masonry damaged by frost or freezing conditions.

.3 Use approved smokeless heaters. Do not use scorched sand.

.4 Do not use salts, admixtures, or antifreezes.

.5 Comply with the following requirements:

Air Temperature	Heating of Materials		Protection
Above 5°C	Normal masonry procedures.		Cover walls and materials
Below 5°C	Heat mixing water. Maintain mortar temperature between 5°C and 30°C until placed.		Cover walls and materials to prevent wetting and freezing.
Below 0°C	In addition to above, heat sand.		Cover walls and materials to prevent wetting and freezing.

	Thaw frozen sand and frozen wet masonry units before use.		
Below -6ºC	In addition to above, heat dry masonry.		Provide enclosure and supply sufficient heat to maintain masonry enclosure above 0oC for 24 h after laying masonry units.

.4 Hot-Weather Requirements: Protect unit masonry work when temperature and humidity conditions produce excessive evaporation of water from mortar and grout. Provide artificial shade and wind breaks and use cooled materials as required. Do not apply mortar to substrates with temperatures of 38 deg C and above.

1.13 PROTECTION

.1 Until masonry work is completed and protected by flashings or other permanent construction, keep masonry dry using waterproof, non-staining coverings that extend over walls and down sides sufficient to protect walls from wind driven rain.

.2 Protect masonry and other work from marking and other damage. Protect completed work from mortar droppings. Use non-staining coverings.

.3 Provide temporary bracing of masonry work, during and after erection, until permanent lateral support is in place.

PART 2 PRODUCTS

2.01 MASONRY UNITS

.1 Normal weight concrete masonry units to CAN/CSA A165 Series , H/15/A/M, as follows:

.1 Size: Metric modular 190 mm high x 390 mm long x thicknesses as indicated.

.1 Provide special sizes and shapes as necessary.

.2 Incude purpose-made shapes for lintels and corners

.3 Provide bullnose units for exposed outside corners.

.2 Compressive Strength: 15 MPa on net area (coordinate with Structural Information).

.3 Fire ratings: Provide concrete masonry units having void to solid ratios and concrete types as necessary to achieve required fire ratings for thicknesses of fire rated walls indicated.

.4 Exposed masonry units shall be free from all surface indentations, surface cracks and other defects detrimental to the appearance of the finished surface. Block having visual defects will be rejected for exposed areas but may be used for concealed or unfinished areas.

.5 Refer also to Architectural & Structural *Drawings*.

.2 Calcium silicate building stone units:

.1 Applicable to ASTM C73 , Grade SW; solid units that have been pressure formed and autoclaved; special shapes as indicated; three size configuration; as follows:
  .1 Modular sizes:
    .1 SHA/UL22: 2-5/16" high, 3-5/8" ±1/4" bed, various lengths up to 23-5/8",
    .2 SHA/UL50: 4-15/16" high, 3-1/4"±1/4"bed, various lengths up to 31-5/8",
    .3 SHA75S: 7-5/8" high, 3-3/4" bed, various lengths up to 23-5/8".
  .2 Texture: split finish on exposed faces.
  .3 Colour: as indicated on *Drawings.*
  .4 Product and Manufacturer's Name: [_____]

2.02 MORTAR AND GROUT MATERIALS

.1 For exposed masonry, use the same brand of mortar and source of aggregate for entire *Project* to ensure uniformity of colouration and other mix characteristics. Ensure mix and colour consistency from day to day.

.2 Follow manufacturer's recommendations.

.3 Masonry Cement, where not otherwise specified: Premixed, masonry cement, Type based on proportion *Specifications* of CAN/CSA A179 as specified. Provide non-staining "white" cement where required to achieve selected colour.

.4 Mortar Colour Pigment: Pure synthetic, inorganic, iron oxide coloured mortar pigment. Standard of acceptance: "Extra Strong Mortar Colour" by Harcros Pigments Canada. Colour to be selected by the *Consultant* from the manufacturer's complete colour range.

.5 Aggregate for Mortar: Sand to ASTM C144, graded with 100% passing No.16 (1.18 mm) sieve

.6 Admixtures: Do not use admixtures, including pigments, air-entraining agents, accelerators, retarders, water-repellent agents, antifreeze compounds, or other admixtures, unless specified or specifically approved in writing by the *Consultant*. Do not use calcium chloride in mortar or grout.

.7 Cold-Weather Admixture: Nonchloride, noncorrosive, accelerating admixture complying with ASTM C494/C494M, Type C, and recommended by the manufacturer for use in masonry mortar of the specified composition. Add cold-weather admixture (if used) at the same rate for all mortar, regardless of weather conditions, in order to ensure that mortar colour is consistent.

.8 Water-Repellent Admixture: Liquid water-repellent mortar admixture intended for use with concrete masonry units containing integral water repellent by the same manufacturer.

.9 Water: Potable.

2.03 MORTAR MIXES

.1 Mix mortar materials under strict supervision and in small batches for immediate use only. Discard mortar which has not been used before initial set has taken place. Do not use retempered mortars.

.2 Mix proprietary mortars in strict accordance with CAN/CSA A179.

.3 Provide the following mixes, based on property *Specifications* except where otherwise specified:

Location/Application	Type	28-day Strength	Description
Bedding lintels	M	17.5 MPa (2,500 psi)	
Masonry below grade and in contact with earth	S	8.5 MPa (1,200 psi)	
Exterior masonry veneer 1:1:6 proprietary, pre-mixed, pre-coloured, Portland cement/lime mortar.	N	3.5 MPa (500 psi)	
All other locations/applications	N	3.5 MPa (500 psi)	

2.04 GROUT

.1 Grout for Unit Masonry:

.1 To CAN/CSA A179. Mix grout of consistency indicated or, if not otherwise indicated, of consistency (fine or coarse) at time of placement that will completely fill spaces intended to receive grout.

.2 Use fine grout in grout spaces less than 50 mm in horizontal dimension, unless otherwise indicated.

.2 Use coarse grout in grout spaces 50 mm or more in least horizontal dimension, unless otherwise indicated.

.3 Minimum compressive strength at 28 days: 15 MPa.

.4 Slump: 75 mm.

2.05 REINFORCEMENT, ANCHORS AND TIES

.1 General: Ties and anchors conform to CAN/CSA A370 and reinforcement shall conform to CAN/CSA A371.

.2 Reinforcing Steel:

.1 Bar: To CAN/CSA A371 and CSA G30.18, Grade 400W.

.2 Truss: To CAN/CSA A371, truss type, flush welded, prefabricated corners and tees.

.3 Bolts and anchors: to CAN/CSA A371 and CSA S304.

.4 Brick Shelf Angle Supports: CAN/CSA A370, pre-manufactured steel angle, thermally broken masonry veneer support system, that permits continuous insulation behind shelf angle.

.5 Horizontal Joint Reinforcement: CAN/CSA A370 and CAN/CSA A371, continuous welded wire reinforcing having a minimum diameter of 3 mm and maximum diameter of one-half joint thickness, or 5 mm whichever is less.

.6 Adjustable Multiple Wythe Joint Reinforcement: CAN/CSA A370 and CAN/CSA A371, continuous welded wire reinforcing having a minimum diameter of 3 mm and maximum diameter of one-half joint thickness, or 5 mm whichever is less.

.1 Material: Mill Galvanized
.2 Vertical Adjustment: Not more than 32 mm.
.3 Adjustable Tie: Positive restraint tie, that engages with horizontal joint reinforcement and provides positive seismic restraint.
.4 Insulation Clips: Provide clips at tabs or ties designed to secure insulation against outer face of inner wythe of masonry.

.7 Connectors for stud wall back-up FOR ALL STONE INSTALLATIONS ARE TO BE STAINLESS STEEL: "Rap-Tie" by Fero Corp., components as follows:

.1 L-plate fabricated from 1.61 mm thick stainless steel sheet to ASTM A666, predrilled with voids to reduce thermal bridge, holes for attachment to studs and holes to receive V-ties; (hand over L-plates for installation by Section 054100 - Structural Metal Stud Framing *).
.2 V-tie fabricated from 4.76 mm dia. stainless steel wire.

.8 Top of Wall Anchors: CAN/CSA A370 steel support anchors providing lateral shear resistance for top of wall, permitting vertical deflection of structure above without transferring load to masonry construction.

.1 Type: Bent Channel
.2 Material: Hot-Dipped Galvanized After Fabrication
.3 Gap Filler: Compressible Neoprene Sponge

.9 Strap Anchors: CAN/CSA A370 bent steel shapes, 38 mm width, 2.7 mm thick, 600 mm length, with 38 mm long, 90 degree bend at each end to form a U or Z shape or with cross pins, hot dip galvanized to ASTM A153/A153M Class B.

.10 Flexible Anchors: CAN/CSA A370 2-piece anchors that permit differential movement between masonry and building frame, sized to provide not less than 16 mm of mortar coverage from masonry face.

.1 Concrete Frame: Dovetail anchors of bent steel strap, nominal 25 mm width x 0.61 mm thick, with trapezoidal wire ties 4.75 mm thick, hot dip galvanized to ASTM A153/A153M, Class B.
.2 Steel Frame: Crimped wire anchors for welding to frame, 6.3 mm thick, with trapezoidal wire ties 4.75 mm thick, hot dip galvanized to ASTM A153/A153M, Class B.

.11 Two-Piece Wall Ties: CAN/CSA A370 formed steel wire, 4.8 mm thick, adjustable, eye and pintle type, hot dip galvanized to ASTM A153/A153M, Class B, sized to provide not less than 16 mm of mortar coverage from masonry face and to allow vertical adjustment of up to 32 mm.

.12 Masonry Veneer Anchors: CAN/CSA A370 2-piece anchors that permit differential movement between masonry veneer and structural backup, hot dip galvanized to ASTM A153/A153M, Class B.

.1 Anchor plates: Not less than 1.91 mm thick, designed for fastening to structural backup through sheathing by two fasteners; provide design with legs that penetrate sheathing and insulation to provide positive anchorage.
.2 Wire ties: Manufacturer's standard shape, 4.75 mm thick.
.3 Vertical adjustment: Not less than 89 mm.

.4 Seismic Feature: Provide lip, hook, or clip on end of wire ties to engage or enclose not less than one continuous horizontal joint reinforcement wire of 3.8 mm diameter.

.13 Metal-to-Metal Fasteners: Self-drilling, self-tapping screws; corrosion resistant finish or hot dip galvanized to ASTM A153/A153M.

.14 Insulation retention: Polyethylene, friction-fit, insulation support devices designed to be inserted over the L-plate and pressed up against the cavity insulation to retain it against the back-up sheathing (hand over L-plates for installation by Section 07 21 00 - Board and Batt Insulation).

.15 Dovetail anchors: Minimum 2.7 mm (12 ga) stainless steel dovetail anchors with 4.8 mm dia. stainless steel wire tie which projects to within 19 mm of masonry veneer face. Standard of acceptance: DT Flex-O-Lok by Blok-Lok.

.16 Miscellaneous Ties: Hot-dip galvanized ties, purpose made to suit each particular application and acceptable to the *Consultant*. Standard of acceptance: *Products* manufactured by Blok-Lok or Dur-O-Wal.

.17 Bolts and anchors: to CAN/CSA A371 and CSA S304.

.18 Galvanizing (where not otherwise specified):

.1 Interior Locations: Mill galvanized, minimum 136 g/m2 zinc coating weight.

.2 Exterior locations: Hot-dipped galvanized to ASTM A123/A123M, minimum 401 g/m2 zinc coating weight.

2.06 PACKING INSULATION

.1 Loose rockwool insulation to CAN/ULC S702.1 and CAN/ULC S702.2 , minimum 16 kg/m3 density.

2.07 FLASHINGS

.1 Membrane Asphaltic Flashing Materials:

.1 Flexible Masonry Flashing: SBS modified bitumen membrane, reinforced with proprietary glass scrim.

.1 Thickness: 1.2 mm.

.2 Standard of acceptance: Blueskin AG by Bakor Inc., (514) 364-1991.

.2 Flexible Masonry Flashing Adhesive: Synthetic rubber, solvent base, trowel consistency type adhesive as recommended by the flexible flashing manufacturer. Standard of acceptance: Air-Bloc 21 by Bakor Inc.

.3 Primers, cleaners and adhesives as recommended by membrane manufacturer.

.4 Metal Drip Flashings and support for through-wall flashings: Minimum 0.76 mm (22 ga) austenitic stainless steel sheet to ASTM A666, Type 304, soft, with type 2B/2D rolled, (unpolished) finish. Standard of acceptance: "S.S. Flashing" by Dur-O-Wal Inc.

.2 Membrane Non-Asphaltic Flashing Materials:

.1 Composite Polymer Flashings - Self-Adhering: Composite polyethylene; 1mm thick with pressure-sensitive adhesive and release paper.

.3 Flashing Sealant/Adhesives: Silicone, polyurethane, or silyl-terminated polyether/polyurethane or other type required or recommended by flashing

manufacturer; type capable of adhering to type of flashing used.

.4 Termination Bars: Stainless steel; compatible with membrane and adhesives.

.5 Drip Edge: Stainless steel; angled drip with hemmed edge; compatible with membrane and adhesives.

.6 Lap Sealants and Tapes: As recommended by flashing manufacturer; compatible with membrane and adhesives.

2.08 MISCELLANEOUS MASONRY ACCESSORIES

.1 Joint Filler: Closed cell polyurethane; oversized 50 percent to joint width;

.2 Soft joint filler and airspace compartmentalization seal:

.1 Purpose made, preformed expansion joint, 10 mm thick x width to suit masonry, closed cell neoprene to ASTM D1056, class RE41 or 2A1, compressibility > 50%. Standard of acceptance: Rapid Soft-Joint/Expansion Joint by Dur-O-Wal Inc.

.1 Emseal softjoint material (uncompressed) by Emseal Corp.

.2 Wall-Seal impregnated precompressed expanding foam sealant tape by Illbruck/USA.

.2 Soft joint filler shall accept up to 60% compression of original size and retain permanent adhesion to both substrates.

.3 Provide sizes to suit application in accordance with manufacturer's recommendations.

.4 Control joint filler: Purpose made, preformed expansion joint, 10 mm thick x width to suit masonry, closed cell neoprene to ASTM D1056, class RE41 or 2A1, compressibility > 50%. Standard of acceptance: Rapid Soft-Joint/Expansion Joint by Dur-O-Wal Inc.

.3 Mortar Dropping Control Device: High density polyethylene or nylon woven mesh type mortar dropping control device with trapezoidal "zig-zag" shaped top edge, designed to allow moisture to drain downward in cavity to the weepholes; thicknesses to suit cavity widths. Standard of acceptance: "The Mortar Net" by Mortar Net USA Ltd., distributed by J.V. Building Supply.

.4 Weepholes/Vents: Purpose-made PVC weephole/ventilator, T-shape, for building into the wall in vertical joint between adjacent bricks. Standard of acceptance: "Goodco" brick vent by Goodco Ltd

.5 Cleaning Solution: Non-acidic, not harmful to masonry work or adjacent materials.

.6 Sealant and sealant accessories: Refer to Section 07 92 00 - Joint Sealants.

.7 Precast Concrete Sill: Colour to match sample as approved by architect. 200mm high x 140mm deep, provided in maximum lengths, smooth finished face.

PART 3 EXECUTION

3.01 EXAMINATION

.1 Verify that site conditions are acceptable and are ready to receive masonry.

.2 Verify that related items provided under other sections are properly sized and located.

.3 Verify that built-in items are in proper location, and ready for roughing into masonry work.

.4 Commencement of the masonry work will be construed as acceptance of the site conditions and, thereafter, the *Contractor* shall be fully responsible for satisfactory work as specified herein.

3.02 PREPARATION

.1 Direct and coordinate placement of metal anchors supplied for installation under other sections.

.2 Provide temporary bracing during installation of masonry work. Maintain in place until building structure provides permanent bracing.

.3 Provide temporary protection to adjacent construction from mortar droppings or other damage caused by the work of this section

3.03 COLD AND HOT WEATHER REQUIREMENTS

.1 Comply with requirements of CAN/CSA A371.

.2 Maintain materials and surrounding air temperature to minimum 5 degrees C prior to, during, and 48 hours after completion of masonry work.

.3 Maintain materials and surrounding air temperature to maximum 32 degrees C prior to, during, and 48 hours after completion of masonry work.

3.04 COURSING

.1 Establish lines, levels, and coursing indicated. Protect from displacement.

.2 Maintain masonry courses to uniform dimension. Form vertical and horizontal joints of uniform thickness.

.3 Coordinate coursing with openings.

.4 Concrete Masonry Units:

.1 Bond: As indicated for different locations.

.5 Building Stone Units:

.1 Bond: As indicated for different locations.

.6 Clay Brick Units:

.1 Bond: As indicated for different locations..

.7 Building Brick Units:

.1 Bond: As indicated for different locations.

3.05 WORKMANSHIP

.1 Do masonry work in accordance with CAN/CSA A371 except where specified otherwise.

.2 Build masonry plumb, level, and true to line, with joints staggered in alternate courses alternate vertical joints in vertical alignment. Maintain specified tolerances.

.3 Lay out coursing and bond to achieve correct coursing heights, and continuity of bond above and below openings, with minimum of cutting. Coordinate with the *Consultant* prior to the commencement of construction.

.4 Cut masonry units with motor-driven saws to provide clean, sharp, unchipped edges. Cut units as required to provide continuous pattern and to fit adjoining construction. Use full-size units without cutting, where possible. Allow units cut with water-cooled saws to dry before placing, unless wetting of units is specified.

Install cut units with cut surfaces and, where possible, cut edges concealed.

.5 Cut masonry for flush-mounted electrical outlets, grilles, pipes, conduit, and other recessed or penetrating items. Leave maximum 3 mm clearance.

.6 Keep exposed faces free from stains, chips and cracks. Remove chipped, cracked, and otherwise deformed units and replace with undamaged units.

.7 Make vertical and horizontal joints 10 mm thick, except where otherwise indicated or specified. Fill all joints solidly with mortar except where specifically designated to be left open.

.8 Buttering corners of units, throwing mortar droppings into joints will not be permitted. Do not shift or tap units after mortar has taken initial set. Where adjustment must be made after the mortar has started to set, removemortar and replace with fresh supply.

.9 Build chases and recesses to accommodate items specified in this and other Sections of the *Specifications*.

.10 Leave openings for equipment to be installed before completion of masonry. After installing equipment, complete masonry to match construction immediately adjacent to the opening.

.11 Mix units for exposed unit masonry from several pallets or cubes as they are placed to produce uniform blend of colours and textures and to avoid abrupt colour/texture changes, patches, and streaks and to produce a homogeneous blended appearance. Do not install units that are too contrasting to produce a satisfactory blend. If varying colours and textures are not blended to the *Consultant's* satisfaction, remove and replace the offending units at no additional cost to the *Contract*.

.12 Lay solid masonry units in full bed of mortar, with full head joints, uniformly jointed with other work.

.13 Lay hollow masonry units with face shell bedding on head and bed joints.

.14 Buttering corners of joints or excessive furrowing of mortar joints is not permitted.

.15 Remove excess mortar and mortar smears as work progresses.

.16 Remove excess mortar with water repellent admixture promptly. Do not use acids, sandblasting or high pressure cleaning methods.

.17 Interlock intersections and external corners.

.18 Perform job site cutting of masonry units with proper tools to provide straight, clean, unchipped edges. Prevent broken masonry unit corners or edges.

.19 Cut mortar joints flush where wall tile is scheduled, resilient base is scheduled, or cavity insulation vapour barrier adhesive is applied.

.20 Isolate masonry partitions from vertical structural framing members with a control joint.

.21 Isolate top joint of masonry partitions from horizontal structural framing members and slabs or decks with compressible joint filler.

3.06 LAYING MASONRY WALLS

.1 Do not wet concrete masonry units before or during laying.

.2 Lay out walls in advance for accurate spacing of surface bond patterns with uniform joint widths and for accurate locating of openings, movement-type joints, returns, and offsets. Avoid the use of less-than-half-size units at corners, jambs,

and where possible at other locations.

.3 Lay walls to comply with specified construction tolerances, with courses accurately spaced and coordinated with other construction.

.4 Provide special shapes as required, such as halves, jambs, corners, and other required special shapes.

.5 Bond Pattern for Exposed Masonry: Generally, lay exposed masonry in running bond with joints in consecutive courses offset no less than 100 mm. Do not use units with less than nominal 100-mm horizontal face dimensions at corners or jambs. Provide special courses and patterns as indicated.

.6 Stopping and Resuming Work: In each course, rack back 1/2-unit length for one-half running bond; do not tooth. Clean exposed surfaces of set masonry, and remove loose masonry units and mortar prior to laying fresh masonry.

.7 Built-in Work: As construction progresses, build-in items specified under this and other Sections of the *Specifications*. Fill in solidly with masonry around built-in items.

3.07 MORTAR BEDDING AND JOINTING

.1 Lay masonry units with completely filled bed and head joints; butter ends with sufficient mortar to fill head joints and shove into place. Do not furrow bed joints or slush head joints.

.2 In concrete blockwork, use full bed of mortar for first course. Bed face shells and cross and end web fully in mortar.

.3 At masonry veneer, slope beds toward airspace to minimize mortar protrusions into airspace. As work progresses, trowel mortar fins protruding into airspace flat against airspace face of brick.

.4 In exposed masonry work, use concave joints. Allow joints to set just enough to remove excess water and, when mortar is "thumbprint" hard, tool with round jointer to provide smooth, compressed, uniformly concave joints.

.5 Strike flush all joints concealed in walls and joints in walls to receive tile, insulation, or other applied material, except that where paint or similar thin finish coating is called for, use concave joints as specified for exposed work.

3.08 AIRSPACE

.1 Keep airspace clean of mortar droppings and other materials during construction. Strike flush joints facing airspace. After the first course of masis laid, install a continuous row of mortar dropping

.2 control device in the airspace, on though-wall flashing, against the inside of the masonry veneer, with the trapezoidal "zigzag" shaped edge in top position and the high points of the "zigzag" aligned with the weepholes, as recommended by the mortar dropping control device manufacturer.

.3 Compartmentalize the airspace by installing a soft joint filler to form a continuous vertical seal at each change of direction of the building face.

3.09 CAVITY MORTAR CONTROL

.1 Do not permit mortar to drop or accumulate into cavity air space or to plug weep/cavity vents.

.2 For cavity walls, build inner wythe ahead of outer wythe to accommodate accessories.

.3 Install cavity mortar control panels continuously throughout full height of exterior masonry cavities during construction of exterior wythe, complying with manufacturer's installation instructions.

.1 Verify that airspace width is no more than 9 mm greater than panel thickness.

.2 Hold cavity mortar control panel tight to face wythe.

.3 Install horizontally between joint reinforcement.

.4 Stagger end joints in adjacent rows.

.5 Fit to perimeter construction and penetrations without voids.

.4 Install cavity mortar diverter at base of cavity and at other flashing locations as recommended by manufacturer to prevent mortar droppings from blocking weep/cavity vents.

3.10 REINFORCEMENT AND ANCHORAGE - GENERAL

.1 Tie masonry veneer to backing to resist all lateral forces in accordance with OBC, Part 4 requirements.

.2 Provide lateral support and anchorage as required.

.3 Hand over masonry connectors for installation by Section 054100 - Structural Metal Stud Framing * and coordinate to ensure correct locations.

.4 Space connectors to OBC requirements. Install additional connectors within 300 mm of openings and at intervals around perimeter of openings not exceeding 200 mm.

.5 Where board insulation is installed in the airspace, coordinate with Section 07 21 00 - Board and Batt Insulation to minimize cutting of insulation boards and to ensure that boards are properly retained in position by the retaining wedges on the ties. Verify that board insulation is properly installed and has been reviewed by the *Consultant*.

.6 Embed ties solidly in mortar to develop maximum resistance to design forces.

.7 Unless otherwise indicated on *Drawings* or specified under specific wall type, install horizontal joint reinforcement 400 mm on center.

.8 Place masonry joint reinforcement in first and second horizontal joints above and below openings. Extend minimum 400 mm each side of opening.

.9 Place continuous joint reinforcement in first and second joint below top of walls.

.10 Embed longitudinal wires of joint reinforcement in mortar joint with at least 16 mm mortar cover on each side.

.11 Lap joint reinforcement ends minimum 150 mm.

.12 Reinforce stack bonded unit joint corners and intersections with strap anchors 400 mm on center.

.13 Fasten anchors to structural framing and embed in masonry joints as masonry is laid. Unless otherwise indicated on *Drawings* or closer spacing is indicated under specific wall type, space anchors at maximum of 900 mm horizontally and 600 mm vertically.

.14 Embed ties and anchors in mortar joint and extend into masonry unit a minimum of 38 mm with at least 16 mm mortar cover to the outside face of the anchor.

3.11 REINFORCEMENT AND ANCHORAGE - MASONRY VENEER

.1 Masonry Back-Up: Embed anchors to bond veneer at maximum 400 mm on center vertically and 900 mm on center horizontally. Place additional anchors at perimeter of openings and ends of panels, so maximum spacing of anchors is 200 mm on center.

.2 Seismic Reinforcement: Connect veneer anchors with continuous horizontal wire reinforcement before embedding anchors in mortar.

.3 Tie masonry veneer to backing to resist all lateral forces in accordance with OBC, Part 4 requirements.

.4 Provide lateral support and anchorage as required.

.5 Hand over masonry connectors for installation by structural specifications section Structural Metal Stud Framing in structural Drawings, and coordinate to ensure correc

.6 Space connectors to OBC requirements. Install additional connectors within 300 mm of openings and at intervals not exceeding 200 mm around the perimeter of openings.

.7 Where board insulation is installed in the airspace, coordinate with Section 07 21 00 - Board and Batt Insulation to minimize cutting of insulation boards and to ensure that boards are properly retained in position by the retaining wedges on the ties. Verify that board insulation is properly installed and has been reviewed by the *Consultant*.

.8 Embed ties solidly in mortar to develop maximum resistance to design forces.

3.12 MASONRY FLASHINGS, WEEPHOLES AND VENTS

.1 Install flexible flashings in accordance with the manufacturer's instructions and where shown on or reasonably implied by the *Drawings* or required by good practice.

.2 Include a through-wall flashing to bridge the airspace at each floor level, as indicated.

.3 Include through-wall flashings above openings and at other locations where required for proper diversion of moisture to the building exterior.

.4 In veneered walls, carry flashings from front edge of masonry, under the veneer, then up backing not less than 200 mm.

.5 Design through-wall flashings with a profile which will divert water to the outside of the wall. Extend flashing membrane slightly beyond the exterior face of the masonry and neatly trim. Do not caulk at the outside face of the wall.

.6 Ensure flexible flashings are fully supported by solid back-up construction; provide specified sheet metal support where the flashings bridge the airspace.

.7 Prepare masonry surfaces so they are smooth and free from projections that could puncture flashing. Place through-wall flashing on sloping bed of mortar and cover with mortar. Seal penetrations in flashing with adhesive, sealant, or tape as recommended by flashing manufacturer before covering with mortar.

.8 Install weephole/ventilators to perform as weepholes in the head joints of the first course of masonry immediately above embedded flashing. Space weep holes 800 mm o.c. Keep weepholes free of mortar droppings and other foreign

materials.

.9 Install weephole / ventilators to perform as ventilators in vertical head joints at the top of each continuous airspace compartment. Space vents at 800 mm o.c., staggered in relation to weepholes above. Close off airspaces vertically and horizontally with blocking in the manner indicated. Install through-wall flashing and weep holes above horizontal blocking.

.10 Install reglets and nailers for flashing and other related construction where shown to be built into masonry.

.11 Whether or not specifically indicated, install masonry flashing to divert water to exterior at all locations where downward flow of water will be interrupted.

.1 Extend flashings full width at such interruptions and at least 150 mm, minimum, into adjacent masonry or turn up flashing ends at least 25 mm, minimum, to form watertight pan at non-masonry construction.

.2 Remove or cover protrusions or sharp edges that could puncture flashings.

.3 Seal lapped ends and penetrations of flashing before covering with mortar.

.12 Terminate flashing up 200 mm minimum on vertical surface of backing:

.1 Install vertical leg of flashing behind water-resistive barrier sheet over backing.

.2 Install vertical leg of flashing over fluid-applied or self-adhered air/vapour barriers over backing or per manufacturer’s directions.

.3 Terminate vertical leg of flashing into bed joint in masonry or reglet in concrete.

.4 Anchor vertical leg of flashing into backing with a termination bar and sealant.

.5 Apply cap bead of sealant on top edge of self-adhered flashing.

.13 Extend metal flashings through exterior face of masonry and terminate in an angled drip with hemmed edge. Install joint sealer below drip edge to prevent moisture migration under flashing.

.14 Support flexible flashings across gaps and openings.

.15 Extend plastic and laminated flashings to within 13 mm of exterior face of masonry and adhere to top of stainless steel angled drip with hemmed edge.

.16 Lap end joints of flashings at least 150 mm, minimum, and seal watertight with flashing sealant/adhesive.

3.13 LINTELS

.1 Coordinate with Section 05 50 00 - Metal Fabrications and install steel lintels where indicated. Provide minimum bearing of 150 mm at each jamb, unless otherwise indicated.

.2 Install loose steel lintels over openings.

.3 Install reinforced unit masonry lintels over openings where steel or precast concrete lintels are not scheduled.

.1 Openings to 1070 mm: Place two, M9 reinforcing bars 25 mm from bottom web.

.2 Openings from 1070 mm to 1980 mm: Place two, M16 reinforcing bars 25 mm from bottom web.

.3 Openings over 1980 mm: Reinforce openings as detailed.
.4 Do not splice reinforcing bars.
.5 Support and secure reinforcing bars from displacement. Maintain position within 13 mm of dimensioned position.
.6 Place and consolidate grout fill without displacing reinforcing.
.7 Allow masonry lintels to attain specified strength before removing temporary supports.

3.14 REINFORCED LINTELS AND BOND BEAMS

.1 Reinforce masonry lintels and bond beams as indicated on the Structural *Drawings*.

.2 Place and grout reinforcement in accordance with CSA S304, CAN/CSA A371 and CAN/CSA A179.

3.15 LOOSE STEEL LINTELS

.1 Coordinate with Section 05 50 00 - Metal Fabrications and install steel lintels where indicated. Provide minimum bearing of 150 mm at each jamb, unless otherwise indicated.

3.16 CONTROL AND EXPANSION JOINTS

.1 Do not continue horizontal joint reinforcement through control or expansion joints.

.2 General: Install control and expansion joints in unit masonry where indicated.

.1 Build-in related items as the masonry progresses.
.2 Do not form a continuous span through movement joints unless provisions are made to prevent in-plane restraint of wall movement.
.3 Verify the locations of the vertical control joints with the *Consultant* before starting work.

.3 Movement joints should be located at changes of wall direction, such as building corners, at wall openings, such as windows and doors. At changes in building height such as building junctions. At major changes of thickness of wall such pilasters, at changes of building materials and below shelf angles. Continuous vertical movement joints should be incorporated along the length of the wall at spacing of between 6 m and 7.6 m in accordance with the manufacturer's recommendations.

.4 Control joints in masonry veneer: Use specified soft-joint/expansion joint material and apply sealant in accordance with Section 07 92 00 - Joint Sealants

3.17 BUILT-IN WORK

.1 As work progresses, install built-in metal door frames and glazed frames and other items to be built into the *Work* and provided under other sections.

.2 Install built-in items plumb, level, and true to line.

.3 Bed anchors of metal door and glazed frames in adjacent mortar joints. Fill frame voids solid with grout.

.1 Fill adjacent masonry cores with grout minimum 300 mm from framed openings.

.4 Do not build into masonry construction organic materials that are subject to deterioration.

3.18 CONSTRUCTION TOLERANCES

.1 Install masonry within site tolerances listed in CAN/CSA A371.

.2 Maximum Variation from Alignment of Columns: 6 mm.

.3 Maximum Variation From Unit to Adjacent Unit: 1.6 mm.

.4 Maximum Variation from Plane of Wall: 6 mm/3 m and 13 mm/6 m or more.

.5 Maximum Variation from Plumb: 6 mm per story non-cumulative; 13 mm in two stories or more.

.6 Maximum Variation from Level Coursing: 3 mm/m and 6 mm/3 m; 13 mm/9 m.

.7 Maximum Variation of Mortar Joint Thickness: Head joint, minus 6 mm, plus 10 mm.

.8 Maximum Variation from Cross Sectional Thickness of Walls: 6 mm.

.9 Variation from Plumb:

.1 For vertical lines and surfaces of columns, walls, and arises, do not exceed 6 mm in 3 m, nor 10 mm in 6 m, nor 12 mm in 12 m.

.2 For external corners, expansion joints, control joints, and other conspicuous lines, do not exceed 1/4" in 20'-0" (6 mm in 6 m), nor 1/2" in 40'-0" (12 mm in 12 m) or more.

.3 For vertical alignment of head joints, do not exceed plus or minus 6 mm in 3 m, nor 12 mm maximum.

.10 Variation from Level:

.1 For bed joints and lines of exposed lintels, sills, parapets, horizontal grooves, and other conspicuous lines, do not exceed 6 mm in 6 m, nor 12 mm in 12 m or more.

.2 For top surface of bearing walls, do not exceed 3 mm in 3 m, nor 1.5 mm within width of a single unit.

.3 Variation of Linear Building Line: For position shown in plan and related portion of columns, walls, and partitions, do not exceed 12 mm in 6 m, nor 19 mm in 12 m.

.4 Variation in Cross-Sectional Dimensions: For columns and thickness of walls, from dimensions shown, do not exceed minus 6 mm nor plus 12 mm.

3.19 CUTTING AND FITTING

.1 Cut and fit for chases, pipes, conduit, sleeves, grounds, and other aperture elements. . Coordinate with other sections of work to provide correct size, shape, and location.

.2 Obtain approval prior to cutting or fitting masonry work not indicated or where appearance or strength of masonry work may be impaired.

3.20 FIELD QUALITY CONTROL

.1 The *Owner* will appoint an independent testing agency to perform site quality control tests and inspections, as specified in Division 01, General and Supplementary conditions of the Contract.

.1 The cost of initial inspection and testing will be paid by the *Owner*. The cost of reinspection and retesting required as a result of failure to meet specified requirements on the initial inspection/test shall be paid by the

Contractor.

.2 If requested, the *Contractor* shall remove a portion of the masonry veneer/exterior wythe (approximately 1 m^2) for inspection of the cavity. Up to four (4) such inspections may be conducted. The *Consultant* reserves the right to require additional inspections, at no additional cost to the *Contract*, if the initial inspections indicate unsatisfactory workmanship.

.3 Evaluation of Quality-Control Tests: In the absence of other indications of noncompliance with requirements, masonry will be considered satisfactory if results from field quality control tests and inspections comply with minimum requirements specified.

3.21 CLEANING

.1 Remove excess mortar and mortar droppings.

.2 Replace defective mortar. Match adjacent work.

.3 Clean soiled surfaces with cleaning solution.

3.22 REPAIRING, POINTING AND CLEANING

.1 Remove and replace masonry units that are loose, chipped, broken, stained, or otherwise damaged or if units do not match adjoining units. Install new units to match adjoining units; install in fresh mortar or grout, pointed to eliminate evidence of replacement.

.2 Pointing: During the tooling of joints, enlarge voids and holes, except weep holes, and completely fill with mortar. Point-up joints, including corners, openings, and adjacent construction, to provide a neat, uniform appearance. Prepare joints for application of sealants.

.3 In-Progress Cleaning: Allow mortar droppings on masonry surfaces to partially dry then remove by means of trowel, followed by rubbing lightly with small piece of block or brick and finally by brushing.

.1 Do not permit mortar droppings on masonry surfaces to become hard before cleaning. Clean within maximum 24 hours of laying.

.4 Final Cleaning: After mortar is thoroughly set and cured, clean exposed masonry as follows:

.1 Remove large mortar particles by hand with wooden paddles and nonmetallic scrape hoes or chisels.

.2 Test cleaning methods on sample wall panel; leave one-half of panel uncleaned for comparison purposes. Obtain the *Consultant's* approval of sample cleaning before proceeding with cleaning of masonry.

.3 Protect adjacent non-masonry surfaces from contact with cleaner by covering them with liquid strippable masking agent, polyethylene film, or waterproof masking tape.

.4 Use only cleaning methods and materials recommended by both the masonry unit and the masonry cement manufacturers.

.5 Wet wall surfaces with water prior to application of cleaners; remove cleaners promptly by rinsing thoroughly with clear water.

3.23 PROTECTION:

.1 Provide final protection and maintain conditions that ensure unit masonry is without damage and deterioration at time of *Ready-For-Takeover.*

.2 Without damaging completed work, provide protective boards at exposed external corners that are subject to damage by construction activities.

END OF SECTION

SECTION 05 50 00
METAL FABRICATIONS

PART 1 GENERAL

1.01 RELATED DOCUMENTS

.1 *Drawings* and general provisions of the *Contract*, including General and Supplementary Conditions and Division 01 *Specifications* sections, apply to this Section.

1.02 SUMMARY OF WORK

.1 The work of this section includes the provision of all labour, materials, equipment and *Services* required to fabricate and install metal fabrications, as indicated on the *Drawings*, as specified herein and as required for a complete *Project.*

.2 Examine the architectural, structural, mechanical, electrical, civil, and landscaping *Drawings* to establish the full extent of the work of this section.

.3 Shop fabricated steel and aluminum items.

1.03 RELATED REQUIREMENTS

.1 Section 08 36 13 - Sectional Metal Overhead Doors

.2 Section 09 91 00 - Painting *: On-site paint finishing.

.3 Section 11 13 00 - Loading Dock Equipment *

.4 Refer to Structural Specifications and Drawings: Concrete Retaining wall for Guardrail

1.04 REFERENCE STANDARDS

.1 ASTM A36/A36M - Standard Specification for Carbon Structural Steel 2019.

.2 ASTM A53/A53M - Standard Specification for Pipe, Steel, Black and Hot-Dipped, Zinc-Coated, Welded and Seamless 2022.

.3 ASTM A283/A283M - Standard Specification for Low and Intermediate Tensile Strength Carbon Steel Plates 2018.

.4 ASTM A307 - Standard Specification for Carbon Steel Bolts, Studs, and Threaded Rod 60 000 PSI Tensile Strength 2021.

.5 ASTM A501/A501M - Standard Specification for Hot-Formed Welded and Seamless Carbon Steel Structural Tubing 2021.

.6 ASTM A653/A653M - Standard Specification for Steel Sheet, Zinc-Coated (Galvanized) or Zinc-Iron Alloy-Coated (Galvannealed) by the Hot-Dip Process 2020.

.7 ASTM A1011/A1011M - Standard Specification for Steel, Sheet and Strip, Hot-Rolled, Carbon, Structural, High-Strength Low-Alloy, High-Strength Low-Alloy with Improved Formability, and Ultra-High Strength 2018a.

.8 ASTM F3125/F3125M - Standard Specification for High Strength Structural Bolts and Assemblies, Steel and Alloy Steel, Heat Treated, Inch Dimensions 120 ksi and 150 ksi Minimum Tensile Strength, Metric Dimensions 830 MPa and 1040 MPA Minimum Tensile Strength 2022.

.9 CSA G40.20/G40.21 - General Requirements for Rolled or Welded Structural Quality Steel / Structural Quality Steel 2013 (Reaffirmed 2018).

.10 CSA S16 - Design of Steel Structures 2019.

.11 CSA W47.1 - Certification of Companies for Fusion Welding of Steel 2019.

.12 CSA W178.1 - Certification of Welding Inspection Organizations 2018.

.13 CSA W178.2 - Certification of Welding Inspectors 2014.

.14 CSA W55.3 - Certification of Companies for Resistance Welding of Steel and Aluminum 2008 (Reaffirmed 2018).

.15 CSA W59 - Welded Steel Construction 2018.

.16 MPI (APL) - Master Painters Institute Approved Products List; Master Painters and Decorators Association Current Edition.

.17 MPI (APSM) - Master Painters Institute Architectural Painting Specification Manual Current Edition.

.18 MPI (APSM) - MPI Architectural Specification Manual, 2007 (referred to herein as "MPI Manual")

1.05 SUBMITTALS

.1 See Section 01 33 00 - Submittal Procedures, for *Submittals* procedures.

.2 *Product* Data: Provide manufacturer's data sheets on each ladder safety system *Product* to be used, including installation instructions.

.3 *Shop Drawings*: Indicate profiles, sizes, connection attachments, reinforcing, anchorage, size and type of fasteners, and accessories. Include erection *Drawings,* elevations, and details where applicable.

.4 Items where structural failure could represent a safety hazard, including all related connections and fastenings, shall be designed by a structural engineer permanently licensed to practise in the Province of the location of the *Project*. Each of the *Shop Drawings* submitted shall bear the stamp and signature of the aforesaid structural engineer.

.1 Post Construction Certification: After installation, provide written certification, signed by the Structural Engineer responsible for the shop drawings, that all applicable items have been installed in accordance with the shop drawings.

1.06 QUALITY ASSURANCE

.1 Design items where structural failure could represent a safety hazard, including all related connections and fastenings under the direct supervision of a structural engineer experienced in design of this work and licensed in the Province in which the *Project* is located.

.2 Fabricator Qualifications: Fabricator certified by CWB to CSA W47.1.

.1 Fabricator will only be permitted to subcontract or sublet work of fabrication or installation to another CWB certified company.

.3 Installer Qualifications: Installer must be CWB certified to the same requirements as the fabricator.

.4 Source Quality Control:

.1 If requested by the *Consultant*, submit laboratory test reports in accordance with Section 01 40 00 - Quality Requirements

.2 Laboratory test reports shall certify compliance of materials with specified requirements.

1.07 WASTE MANAGEMENT AND DISPOSAL

.1 Cooperate with the waste management coordinator in the implementation of the waste management plan specified in Section 01 74 19 - Construction Waste Management and Disposal.

.2 Handle and dispose of waste materials, including packaging materials, generated by the work of this section in accordance with the waste management plan.

PART 2 PRODUCTS

2.01 MATERIALS - STEEL

.1 Steel Sections: CSA G40.20/G40.21, Grade 300W.

.2 Steel Tubing: ASTM A501/A501M hot-formed structural tubing.

.3 Plates: ASTM A283/A283M.

.4 Pipe: ASTM A53/A53M, Grade B Schedule 40, black and hot-dip galvanized finish, as indicated for exterior work.

.5 Slotted Channel Framing: ASTM A653/A653M, Grade 33.

.6 Slotted Channel Fittings: ASTM A1011/A1011M.

.7 Fasteners: As required for in-service conditions.

.8 Bolts, Nuts, and Washers: ASTM A307, Grade A, plain.

.9 Bolts, Nuts, and Washers: ASTM F3125/F3125M, Type 1, plain.

.10 Welding Materials: CSA W59; type required for materials being welded.

2.02 PRIMERS

.1 For interior steel surfaces:MPI (APL) #76 or #79 at the option of the fabricator. Maximum VOC content 250 g/L (less water).

.2 For exterior steel surfaces: MPI (APL) #79. Maximum VOC content 250 g/L (less water).

.3 Touch-up for galvanized surfaces: Zinc-rich primer MPI (APL) #19. Maximum VOC content 250 g/L (less water).

MATERIALS - ALUMINUM

2.03 FABRICATION

.1 Fit and shop assemble items in largest practical sections, for delivery to site.

.2 Fabricate items with joints tightly fitted and secured.

.3 Continuously seal joined members by continuous welds.

.4 Grind exposed joints flush and smooth with adjacent finish surface. Make exposed joints butt tight, flush, and hairline. Ease exposed edges to small uniform radius.

.5 Exposed Mechanical Fastenings: Flush countersunk screws or bolts; unobtrusively located;

.1 Connections:

.1 Use welded connections for all metal work unless otherwise approved by the *Consultant* or unless otherwise indicated on the drawings.

.2 Where welded connections are not used, use bolted connections unless otherwise indicated.

.3 Use screws only where indicated or only with the approval of the Consultant. Where assembly by screws is indicated, use self-tapping, flat headed, shake-proof screws.

.6 Where possible, fit and shop assemble work, ready for erection.

.7 Ensure exposed welds are continuous for length of each joint. File or grind exposed welds smooth and flush. Seal exterior steel fabrications to provide corrosion protection in accordance with CAN/CSA S16.

.8 Supply components required for anchorage of fabrications. Fabricate anchors and related components of same material and finish as fabrication, except where specifically noted otherwise.

.9 Fabricate work square, true, straight and accurate to required size, with joints closely fitted and properly secured.

.10 Fabricate items from steel unless otherwise noted.

.11 Exposed surfaces of finished steelwork to be machined and/or filled to a smooth blemish-free surface, prior to prime coating. File and grind exposed welds smooth and flush. Grind off weld-splatter.

.12 Connections:

.1 Use welded connections for all metal work unless otherwise approved by the Consultant or unless otherwise indicated on the drawings.

.2 Where welded connections are not used, use bolted connections unless otherwise indicated.

.3 Use screws only where indicated or only with the approval of the Consultant. Where assembly by screws is indicated, use self-tapping, flat headed, shake-proof screws.

.13 Where possible, fit and shop assemble work, ready for erection.

.14 Ensure exposed welds are continuous for length of each joint. File or grind exposed welds smooth and flush. Seal exterior steel fabrications to provide corrosion protection in accordance with CAN/CSA S16 .

2.04 MISCELLANEOUS METALWORK

.1 Examine architectural, structural, mechanical and electrical *Drawings* and *Specifications* and furnish all miscellaneous metalwork items required for proper execution of the *Project*, including, but not necessarily limited to, the items described herein.

.2 Supply for installation by respective trades, steel brackets, supports and angles as indicated. Drill for countersunk screws and anchor bolts. Prime paint for interior installation, galvanize for exterior installations.

.3 Provide all accessories necessary for proper installation and correlation with adjoining work.

2.05 COORDINATION

.1 Coordinate the work of this section with the structural steelwork *Supplier* to ensure that all structural steelwork and metal fabrications required for a complete *Project* are included.

.2 i) Be advised that claims for extras to the *Contract* Sum for the supply and/or installation of structural steelwork or metal fabrications arising from failure to coordinate the work of this section with the structural steelwork *Supplier* will not be considered.

.3 Where the work of this section is furnished for installation by other trades, coordinate with the appropriate trades to ensure a proper fit and to schedule delivery dates to ensure the expeditious completion of the *Project.*

2.06 FLOOR PIT, TRENCH, AND AIRWAY FRAMES AND COVERS

.1 Provide, for installation by the concrete trade, floor pit, trench, and airway frames and covers. Refer to architectural, structural, and mechanical *Drawings.*

.2 Fabricate solid and grating covers to sizes and configurations indicated and as required, complete with perimeter frames, weld plates, and anchor bolts for casting into concrete.

.3 Include gasketting at airway covers and elsewhere where indicated.

.4 Verify critical dimensions on site prior to fabrication.

.5 Steelwork to be hot-dipped galvanized after fabrication for paint finish by Section 09 91 00 - Painting *.

2.07 ACCESS LADDERS

.1 Provide access ladders complete with a ladder safety system in compliance with the requirements of the Occupational Health and Safety Act of the province in which the *Work* is located, the applicable building code, and the authorities having jurisdiction.

.2 Provide *Shop Drawings* for access ladder supports and connection back to structural of the building stamped by a structural engineer licensed in the province of the *Work*.

.3 Provide access ladders as idicated and as follows:

.1 Stringers: 65 mm x 10 mm thick steel bar, spaced 457mm apart, drilled to receive rungs.

.2 Rungs, 25 mm dia. steel rod, welded to stringers at 305 mm o.c.

.3 Brackets: 75 mm x 200 mm angle straps, welded to stringers at maximum 1200 mm o.c., complete with fixing anchors and fasteners.

.4 Provide 175 mm clearance between rungs and the face of the wall.

.5 Provide each stringer with a fixing bracket with 300 mm of each end.

.6 Weld brackets to stringers in continuous runs; tack welds are not acceptable.

.7 Include a OHSA- and code-compliant safety cage.

.4 Interior ladders to be shop prime coated for paint finish by Section 09 91 00 - Painting *

2.08 BOLLARDS

.1 Exterior steel bollards to be hot dip galvanized after fabrication for paint finish by Section 09 91 00 - Painting *.

.2 Interior steel bollards to be shop prime coated for paint finish by Section 09 91 00 - Painting * .

.3 Fabricate bollards from 152 mm dia HSS galvanized steel pipe to be filled with concrete, and unless otherwise noted:

.1 Height above grade 1370 mm.

.2 Depth below grade: minimum 1524 mm,

.3 Foundation: Coordinate with concrete installer to set the bollards into a 610 mm dia x 1524 mm deep concrete foundation.

.4 Bollards installed tight to building are to be anchored directly to the foundation wall by means of two (2) steel brackets, with a below grade foundation. Minimum depth 915 mm below grade when bolted to the foundation wall.

.5 Interior bollards may require base plate and Hilti anchors into floor slabs (to be confirmed with the *Owner* and *Consultant*).

2.09 GUARDRAIL & STEEL PROTECTION BARRIER

.1 Steelwork for guardrails & steel protection barrier to be hot dipped galvanized and prepared for paint finish by Section 09 91 00 - Painting *

.1 Colour: As per *Drawings.*

.2 Provide *Shop Drawings* for guardrail and steel protection barrier signed and stamped by a structural engineer licensed in the province of the *Work.*

.3 Fabricate from HSS sections and formed steel plate to profiles indicated on the *Drawings.*

.4 Guardrails to be installed continuously where the top of retaining wall is 580mm (1-10") above the top of ramp surface.

.5 Steel protection barrier to be fixed to face of retaining wall continuously along full length of ramp.

2.10 OVERHEAD DOOR FRAMES

.1 Provide steel frames to jambs and heads of overhead doors .

.2 Provide *Shop Drawings* for overhead door bracing and supports, including all drums and tracks, signed and stamped by a structural engineer licensed in the province of the *Work.*

.3 Fabricate from HSS sections and formed steel plate to profiles indicated on the *Drawings*.

.4 Coordinate with structural steelwork and verify dimensions on site to ensure a proper fit.

.5 Coordinate with Section 08 36 13 - Sectional Metal Overhead Doors to ensure a proper interface with the overhead door installation.

.6 Steelwork to be shop prime coated for paint finish by Section 09 91 00 - Painting *.

2.11 MISCELLANEOUS METAL FABRICATIONS FOR OVERHEAD DOORS

.1 Provide miscellaneous steelwork as required for the sectional metal overhead door. Coordinate installation with the overhead door *Suppliers.*

.2 Coordinate with Section 08 36 13 - Sectional Metal Overhead Doors. Verify requirements with the system manufacturer and provide and install metal fabrications required for the sectional metal overhead door installations, including framing, support brackets and bearing plates required for proper fastening of tracks, c/w track support and protection channels, hardware, support for torsion springs, machinery, accessories and all other metal fabrications required for a complete installation, in accordance with the requirements of the reviewed and accepted door manufacturer's *Shop Drawings.*

.3 Verify dimensions on site prior to fabrication.

.4 Coordinate with the structural steel *Supplier*.

.5 Steel to be prime coated.

.6 Be advised that claims for extras to the *Contract* price for the supply and/or installation of metal fabrications associated with the sectional metal overhead door and high-speed rolling door installations will not be considered.

PART 3 EXECUTION

3.01 EXAMINATION

.1 Examine areas and conditions under which the *Work* is to be performed and notify the *Consultant* in writing of conditons detrimental to the proper and timely completion of the *Work*.

.2 Do not proceed with the *Work* until unsatisfactory conditions have been corrected to the satisfaction of the installer.

.3 Take field measurements to verify or supplement dimensions.

.4 Commencement of the installation will be construed as acceptance of the site conditions and, thereafter, the *Contractor* shall be fully responsible for satisfactory work as specified herein.

3.02 PREPARATION

.1 Clean and strip primed steel items to bare metal where site welding is required.

.2 Supply setting templates to the appropriate entities for steel items required to be cast into concrete or embedded in masonry.

3.03 INSTALLATION

.1 Install items plumb and level, accurately fitted, free from distortion or defects.

.2 Provide for erection loads, and for sufficient temporary bracing to maintain true alignment until completion of erection and installation of permanent attachments.

.3 Site weld components as indicated on the reviewed and accepted *Shop Drawings.*

.4 Perform site welding in accordance with CSA W59.

.5 Perform resistance welding in accordance with CSA W55.3.

.6 Perform fusion welding in accordance with CSA W59.

.7 Perform welding review in accordance with CSA W178.1 and CSA W178.2.

.8 Obtain approval prior to site cutting or making adjustments not indicated.

.9 After erection, prime welds, abrasions, and surfaces not shop primed , except surfaces to be in contact with concrete.

3.04 METALWORK INTEGRATED INTO THE WORK OF OTHER SECTIONS

.1 Coordinate with the appropriate other Sections, work which is to be integrated into the work of those Sections.

.2 Where appropriate, fabricate the work of this Section and hand over to others for installation.

3.05 FLOOR PIT AND TRENCH FRAMES AND COVERS

.1 Provide pit and trench frames for casting into concrete.

.2 Install solid and grating covers as applicable.

3.06 METAL FABRICATIONS FOR OVERHEAD DOORS

.1 Install steel channel frames, threshold and miscellaneous steel fabrications, as indicated on the reviewed metal fabrications and overhead door *Shop Drawings*.

3.07 TOLERANCES

.1 Maximum Variation From Plumb: 6 mm per storey, non-cumulative.

.2 Maximum Offset From True Alignment: 6 mm.

.3 Maximum Out-of-Position: 6 mm.

END OF SECTION 05 50 00

This page intentionally left blank

SECTION 05 51 00
METAL STAIRS

PART 1 GENERAL

1.01 RELATED DOCUMENTS

.1 *Drawings* and general provisions of the *Contract*, including General and Supplementary Conditions and Division 01 *Specifications s*ections, apply to this section.

1.02 SECTION INCLUDES

.1 Stairs with concrete treads.

.2 Structural steel stair framing and supports.

.3 Handrails and guards.

1.03 RELATED REQUIREMENTS

.1 Cast-In-Place-Concrete - Refer to *Structural Specifications* for Concrete fill in stair pans and landings; mesh reinforcement for landings.

.2 Section 05 50 00 - Metal Fabrications.

.3 Section 09 91 00 - Painting *.

.4 Section 32 17 26 - Tactile Warning Surfacing: for tactile attention indicator as indicated on plans

1.04 REFERENCE STANDARDS

.1 ASTM A53/A53M - Standard Specification for Pipe, Steel, Black and Hot-Dipped, Zinc-Coated, Welded and Seamless 2022.

.2 ASTM A123/A123M - Standard Specification for Zinc (Hot-Dip Galvanized) Coatings on Iron and Steel Products 2017.

.3 ASTM A283/A283M - Standard Specification for Low and Intermediate Tensile Strength Carbon Steel Plates 2018.

.4 ASTM A500/A500M - Standard Specification for Cold-Formed Welded and Seamless Carbon Steel Structural Tubing in Rounds and Shapes 2021a.

.5 ASTM A501/A501M - Standard Specification for Hot-Formed Welded and Seamless Carbon Steel Structural Tubing 2021.

.6 ASTM A786/A786M - Standard Specification for Hot-Rolled Carbon, Low-Alloy, High-Strength Low-Alloy, and Alloy Steel Floor Plates 2015 (Reaffirmed 2021).

.7 CSA G40.20/G40.21 - General Requirements for Rolled or Welded Structural Quality Steel / Structural Quality Steel 2013 (Reaffirmed 2018).

.8 CSA S16 - Design of Steel Structures 2019.

.9 CSA W47.1 - Certification of Companies for Fusion Welding of Steel 2019.

.10 CSA W55.3 - Certification of Companies for Resistance Welding of Steel and Aluminum 2008 (Reaffirmed 2018).

.11 CSA W59 - Welded Steel Construction 2018.

.12 CSA W178.1 - Certification of Welding Inspection Organizations 2018.

.13 CSA W178.2 - Certification of Welding Inspectors 2014.

.14 CWB 112E - Welding Symbols Study Guide 2004.

.15 NAAMM AMP 510 - Metal Stairs Manual 1992.

.16 SSPC-SP 2 - Hand Tool Cleaning 1982, with Editorial Revision (2004).

1.05 SUBMITTALS

.1 See Division 01, General and Supplementary conditions of the *Contract* for submittal procedures.

.2 *Shop Drawings*: Indicate profiles, sizes, connection attachments, reinforcing, anchorage, size and type of fasteners, and accessories.

.1 Indicate welded connections using The Canadian Welding Bureau (CWB) symbols (CWB 112E).

.2 Stairs, landings, handrails and guards, including vertical and horizontal supports, and all related connections and fastenings, shall be designed by a structural engineer permanently licensed to practice in the province of the Work. Each of the *Shop Drawings* submitted shall bear the stamp and signature of the aforesaid structural engineer.

.3 Post-installation certification: After installation, provide written certification, signed by the Structural Engineer responsible for the shop drawings, that all applicable items have been installed in accordance with the shop drawings.

.3 Design Data: As required by authorities having jurisdiction.

.4 Welders' Certificates: Comply with applicable CWB standards for classification of work being performed:

.1 Welding review: to CSA W178.1 and CSA W178.2.

.2 Resistance welding: to CSA W55.3.

.3 Fusion welding: to CSA W59.

.5 Fabricator's Qualification Statement: Provide documentation showing steel fabricator is certified under CISC Certification of Steel Structures.

1.06 QUALITY ASSURANCE

.1 Structural Designer Qualifications: Professional Structural Engineer experienced in design of this work and licensed in the Province in which the *Project* is located, or personnel under direct supervision of such an engineer.

.2 Fabricator Qualifications:

.1 A qualified steel fabricator that is certified by the Canadian Institute for Steel Construction (CISC).

1.07 WASTE MANAGEMENT AND DISPOSAL

.1 Cooperate with the waste management coordinator in the implementation of the waste management plan specified in Division 01, General and Supplementary conditions of the Contract.

.2 Handle and dispose of waste materials, including packaging materials, generated by the *Work* of this section in accordance with the waste management plan.

PART 2 PRODUCTS

2.01 METAL STAIRS - GENERAL

.1 Regulatory Requirements: Provide design, materials and fabrication in accordance with CSA S16 and NAAMM AMP 510 and Canadian Welding Bureau certification requirements.

.1 Fabricator certified by Canadian Welding Bureau to CSA W47.1.
.2 Perform welding review in accordance with CSA W178.1 and CSA W178.2.
.3 Perform resistance welding in accordance with CSA W55.3.
.4 Perform fusion welding in accordance with CSA W59.

.2 Metal Stairs: Provide stairs of the design indicated, complete with landing platforms, vertical and horizontal supports, railings, and guards, fabricated accurately for anchorage to each other and to the building structure.
.1 Accessibility: Comply with applicable accessibility requirements of the applicable local code, and authorities having jurisdiction.
.2 Structural Design: Provide complete stair and railing assemblies complying with the applicable local code.
.3 Dimensions: As indicated on the *Drawings.*
.4 Shop assemble components; disassemble into largest practical sections suitable for transport and access to site.
.5 There shall be no sharp or rough areas on exposed travel surfaces and surfaces accessible to touch.
.6 Separate dissimilar metals using high-build bituminous coating or permanent tape.

.3 Metal Jointing and Finish Quality Levels:
.1 Commercial: Exposed joints as inconspicuous as possible, whether welded or mechanical; underside of stair not covered by soffit IS considered exposed to view.
.1 Welded Joints: Intermittently welded on back side, filled with body putty, and sanded smooth and flush.
.2 Welds Exposed to View: Ground smooth and flush.
.3 Mechanical Joints: Butted tight, flush, and hairline.
.4 Bolts Exposed to View: Countersunk flat or oval head bolts; no exposed nuts.
.5 Exposed Edges and Corners: Eased to small uniform radius.
.6 Metal Surfaces to be Painted: Sanded or ground smooth, suitable for satin or matte finish.
.7 Finishes:
.1 Interior assemblies: Paint finish by Section 09 91 00 - Painting *.
.2 Exterior assemblies: Hot dipped galvanized after fabrication to ASTM A123/A123M, minimum 600 g/m2 coating thickness.

.4 Fasteners: Same material or compatible with materials being fastened; type consistent with design and specified quality level.

.5 Anchors and Related Components: Same material and finish as item to be anchored, except where specifically indicated otherwise; provide all anchors and fasteners required.

2.02 METAL STAIRS WITH CONCRETE TREADS

.1 Jointing and Finish Quality Level: Commercial, as defined above.

.2 Risers: Closed.

.3 Treads: Metal pan with site-installed concrete fill.
.1 Concrete Depth: 38 mm, minimum.

.2 Friction Coefficient: 0.85 minimum
.3 Tread Pan Material: Steel sheet.
.4 Tread Pan Thickness: As required by design; 1.9 mm minimum.
.5 Pan Anchorage to Stringers: Welded to carrier angles welded to stringers.
.6 Concrete Reinforcement: Welded wire mesh.
.7 Concrete Finish: As indicated on the *Drawings.*
.8 Provide 64mm (2 1/2") painted contrasting colour strip to demarcate all stair landing and nosing edges for higher visibility.
.1 Paint to be anti-slip.
.2 Colour: As indicated on *Drawings.*

.4 Risers: Same material and thickness as tread pans.
.1 Nosing Depth: Not more than 38 mm overhang.

.5 Stringers: Rolled steel channels.
.1 Stringer Depth: As required by design
.2 End Closure: Sheet steel of same thickness as risers welded across ends.

.6 Landings: Same construction as treads, supported and reinforced as required to achieve design load capacity.

.7 Railings: Steel picket railings.

.8 Under Side of Stair: Areas exposed to view to be finished same as specified for other exposed to view surfaces.

2.03 HANDRAILS, GUARDS AND GATES

.1 Wall-Mounted Rails: Round pipe or tube rails unless otherwise indicated.
.1 Outside Diameter: 38 mm.
.2 Ensure extensions and curved returns of rails as required by *Drawings* as well as prevailing building code and authorities having jurisdiction are provided.

.2 Guards:
.1 Top and Bottom Rails: Round pipe or tube rails unless otherwise indicated.
.1 Outside Diameter: 38 mm, maximum.
.2 Infill at Picket Railings: Vertical pickets.
.1 Horizontal Spacing: Maximum 100 mm on centre.
.2 Material: Solid steel bar.
.3 Shape: Round.
.4 Size: 13 mm diameter.
.5 Top Mounting: Welded to underside of top rail.
.6 Bottom Mounting: Welded to top surface of stringer.
.3 End and Intermediate Posts: Same material and size as top rails.
.1 Horizontal Spacing: As indicated on *Drawings*.
.2 Mounting: Welded to top surface of stringer.

2.04 MATERIALS

.1 Steel Sections: CSA G40.20/G40.21.

.2 Steel Tubing: ASTM A500/A500M or ASTM A501/A501M structural tubing, round and shapes as indicated.

.3 Steel Plates: CSA G40.20/G40.21 or ASTM A283/A283M.

.4 Pipe: ASTM A53/A53M Grade B Schedule 40, black finish.

.5 Tactile Surfaced Warning Indicator: Refer to 32 17 26 - Tactile Warning Surfacing

.6 Concrete Fill: As required by Structural Drawings and specifications.

.7 Concrete Reinforcement: Mesh type as required by Structural Drawings and specifications, galvanized.

2.05 PRIMER

.1 For interior steel surfaces: MPI (APL) #76 or #79 at the option of the fabricator. Maximum VOC content 250 g/L (less water).

2.06 SHOP FINISHING

.1 Preparation of Interior Steelwork: Clean, prepare surface and shop prime steel to CSA S16. Thoroughly de-scale steelwork; remove roughness and irregularities; clean with a wire brush; remove oil and grease.

.2 Do not prime surfaces in direct contact with concrete or where site welding is required.

.3 Primer Application:

.1 Except where specified otherwise, apply one coat of primer to non-galvanized surfaces.

.2 Use primer unadulterated, as prepared by manufacturer. Paint on dry surfaces, free from rust, scale, grease. Do not paint when temperature is lower than 7°C.

.3 Take special care when applying primer to prepared surfaces of steelwork to be exposed in the finished installation to obtain a smooth surface capable of allowing a high-quality paint finish. Do additional filling and grinding if required.

.4 Field touch-up: Verify that surfaces to be touched up are free from rust, scale, grease. Touch up with same material as shop primer.

.4 Finish painting is specified in Section 09 91 00 - Painting *.

.5 Do not prime the following surfaces:

.1 Steel to be encased in concrete;

.2 Galvanized or non-ferrous metals;

.3 Surfaces and edges to be field welded. If painted, remove paint for field welding for a distance of at least 50 mm in all sides of the paint.

PART 3 EXECUTION

3.01 EXAMINATION

.1 Examine areas and conditions under which work is to be performed and notify the *Consultant* in writing of conditions detrimental to the proper and timely completion of the *Work*.

.2 Do not proceed with the *Work* until unsatisfactory conditions have been corrected to the satisfaction of the installer.

.3 Take field measurements to verify or supplement dimensions.

.4 Commencement of the installation will be construed as acceptance of the site conditions and, thereafter, the *Contractor* shall be fully responsible for satisfactory work as specified herein.

3.02 PREPARATION

.1 When site welding is required, clean and strip primed steel items to bare metal.

.2 Supply items required to be cast into concrete and embedded in masonry with setting templates.

3.03 INSTALLATION

.1 Install components plumb and level, accurately fitted, free from distortion or defects.

.2 Allow for erection loads, and for sufficient temporary bracing to maintain true alignment until completion of erection and installation of permanent attachments.

.3 Provide welded site joints where specifically indicated on the *Drawings.* Perform site welding in accordance with CSA W59.

.4 Other site joints may be either welded or bolted provided the result complies with the limitations specified for jointing quality levels.

.5 Obtain the *Consultant's* acceptance prior to site cutting or creating adjustments not scheduled.

.6 After erection, prime welds, abrasions, and surfaces not shop primed or galvanized, except surfaces to be in contact with concrete.

3.04 TOLERANCES

.1 Maximum Variation From Plumb: 6 mm per storey, non-cumulative.

.2 Maximum Offset From True Alignment: 6 mm.

END OF SECTION 05 51 00

SECTION 06 10 00
ROUGH CARPENTRY

PART 1 GENERAL

1.01 RELATED DOCUMENTS

.1 *Drawings* and general provisions of the *Contract*, including General and Supplementary Conditions and Division 01 *Specifications* sections, apply to this section.

1.02 SECTION INCLUDES

.1 *Work* Included: The work of this section includes the provision of all labour, materials, equipment and *Services* required to execute rough carpentry work, as indicated on the *Drawings*, as specified herein and as required for the proper completion of the *Work* of all trades as required for a complete *Project*.

.2 The *Work* includes, but is not limited to:

- .1 Roof-mounted curbs.
  - .1 Roofing cant strips (where recommended by the roofing manufacturer).
- .2 Preservative treated wood materials.
- .3 Fire retardant treated wood materials.
- .4 Concealed wood blocking, nailers, and supports required for the proper installation of work specified in other sections.

1.03 RELATED REQUIREMENTS

.1 Section 06 41 16 - Plastic-Laminate-Clad Wood Casework.
.2 Section 07 52 00 - Modified Bituminous Membrane Roofing
.3 Section 07 62 00 - Sheet Metal Flashing and Trim.
.4 Section 09 21 16 - Gypsum Board Assemblies.
.5 Section 09 22 16 - Non-Structural Metal Stud Framing.
.6 Division 26 - Electrical.

1.04 REFERENCE STANDARDS

.1 ASTM A153/A153M - Standard Specification for Zinc Coating (Hot-Dip) on Iron and Steel Hardware 2016a.
.2 ASTM D2898 - Standard Test Methods for Accelerated Weathering of Fire-Retardant-Treated Wood for Fire Testing 2010 (Reapproved 2017).
.3 CAN/CSA O80 Series - Wood Preservation 2015.
.4 CAN/CSA O112 - Wood Adhesives Series-1977 (R2006).
.5 CAN/CSA O121 - Douglas Fir Plywood 2017 (Reaffirmed 2022).
.6 CAN/CSA O151 - Canadian Softwood Plywood 2017 (Reaffirmed 2022).
.7 CAN/ULC S102 - Method of Testing for Surface Burning Characteristics of Building Materials and Assemblies 2018.
.8 CSA B111 - Wire Nails, Spikes and Staples 1974 (R2003).
.9 NLGA (SGRNL) - Standard Grading Rules for Canadian Lumber 2017.

1.05 SUBMITTALS

.1 See Division 01, General and Supplementary conditions of the *Contract*. for submittal procedures.

.2 *Product* Data: Provide complete technical data on wood preservative materials and application instructions.

.3 Certification: Provide written certification that all wood and wood-based *Products* used on the *Project* are FSC certified.

1.06 QUALITY ASSURANCE

.1 Lumber identification: by grade stamp of an agency certified by Canadian Lumber Standards Accreditation Board.

.2 Plywood identification: by grade mark in accordance with applicable CSA standards.

1.07 DELIVERY, STORAGE, AND HANDLING

.1 General: Cover wood *Products* to protect against moisture. Support stacked *Products* to prevent deformation and to allow air circulation.

.2 Fire Retardant Treated Wood: Prevent exposure to precipitation during shipping, storage, and installation.

1.08 WASTE MANAGEMENT AND DISPOSAL

.1 Cooperate with the waste management coordinator in the implementation of the waste management plan specified in Division 01, General and Supplementary conditions of the Contract.

.2 Handle and dispose of waste materials, including packaging materials, generated by the work of this section in accordance with the waste management plan.

PART 2 PRODUCTS

2.01 GENERAL REQUIREMENTS

.1 Lumber and wood-based *Products* fabricated from old growth timber is not permitted.

.2 Provide lumber and wood-based *Products* that are FSC certified and are accompanied by a valid FSC chain of custody certificate number.

.3 Provide wood harvested within a 800 km radius of the *Project* site.

.4 Lumber salvaged from deconstruction or demolition of existing buildings or structures is permitted in lieu of sustainably harvested lumber provided it is clean, denailed, and free of paint and finish materials, and other contamination; and has required structural integrity; identify source.

.5 Wood based *Products* shall have no added urea formaldehyde or resins containing urea formaldehyde.

2.02 DIMENSION LUMBER

.1 Grading Agency: National Lumber Grading Authority NLGA (SGRNL)

.2 Species: Spruce-Pine-Fir, unless otherwise indicated.

.3 Sizes: Nominal sizes as indicated or as required by site conditions, S4S.

.4 Moisture Content: S-dry or MC19.

.5 Species: Spruce-Pine-Fir.

.6 Grade: No. 2.

.7 Glued end-jointed (finger-jointed) lumber is not acceptable.

2.03 CONSTRUCTION PANELS

.1 Panel Materials

.1 Douglas fir plywood (DFP): to CAN/CSA O121, standard construction, except where otherwise indicated.

.2 Canadian softwood plywood (CSP): to CAN/CSA O151, standard construction, except where otherwise indicated..

2.04 ACCESSORIES

.1 General purpose adhesive: to CAN/CSA O112. Maximum VOC content 70 g/L (less water).

.1 Nails, spikes and staples: to CSA B111.

.2 Bolts: 12.5 mm diameter unless indicated otherwise, complete with nuts and washers.

.2 Fasteners and Anchors:

.1 Metal and Finish: Hot-dipped galvanized steel complying withASTM A153/A153M for high humidity and preservative-treated wood locations, unfinished steel elsewhere.

.3 Proprietary fasteners:

.1 Toggle bolts, expansion shields and lag bolts, screws and lead or inorganic fibre plugs, explosive actuated fastening devices, recommended for the purpose by the manufacturer.

2.05 FACTORY WOOD TREATMENT

.1 Treated Lumber and Plywood: Comply with requirements of CAN/CSA O80 Series - Use Category System for wood treatments determined by use categories, expected service conditions and specific applications.

.1 Fire-Retardant Treated Wood: Mark each piece of wood with producer's stamp indicating compliance with specified requirements.

.2 Preservative-Treated Wood: Mark each piece of wood with producer's stamp certifying level and type of treatment in accordance with CAN/CSA O80 Series.

.2 Fire Retardant Treatment:

.1 Exterior Type: CAN/CSA O80 Series, Category UCFB, Commodity Specification H, chemically treated and pressure impregnated in accordance with CAN/ULC S102, with no evidence of significant combustion when test is extended for an additional 20 minutes both before and after accelerated weathering test performed in accordance with ASTM D2898.

.1 Kiln dry wood after treatment to a maximum moisture content of 19 percent for lumber and 15 percent for plywood.

.2 Treat all exterior rough carpentry items.

.3 Do not use treated wood in direct contact with the ground.

.3 Preservative Treatment:

.1 Exterior, Preservative Pressure Treatment of Lumber and Plywood, No Ground Contact (UC3): CAN/CSA O80 Series, with Use Category UC3A, Commodity Specification A using waterborne preservative .
  .1 Kiln dry lumber after treatment to maximum moisture content of 19 percent.
  .2 Treat lumber exposed to weather.
  .3 Treat lumber in contact with roofing, flashing, or waterproofing.
  .4 Treat lumber in contact with masonry or concrete.
  .5 Treat lumber less than 450 mm above grade.
  .6 Treat lumber in other locations as indicated.

.2 Interior, Preservative Pressure Treatment of Lumber and Plywood, Normally Dry Construction (UC1): CAN/CSA O80 Series for interior construction protected from weather and not in contact with ground or foundations, used in locations such as areas exposed to plumbing or condensation leakage, tub surrounds or spas.
  .1 Kiln dry plywood after treatment to maximum moisture content of 19 percent.
  .2 Treat plywood in contact with masonry or concrete.
  .3 Treat plywood in other locations as indicated.

.3 Preservative for Site Application to Cut Surfaces: As recommended by manufacturer of factory treatment chemicals for brush-application on site.

.4 Restrictions: Do not use lumber or plywood treated with chromated copper arsenate (CCA) in exposed exterior applications subject to leaching.

PART 3 EXECUTION

3.01 PREPARATION

.1 Coordinate installation of rough carpentry with related work specified in other sections.

.2 Examine architectural, structural, mechanical, electrical and landscape *Drawings* and furnish all rough carpentry work required by all trades for a finished *Project*.

3.02 INSTALLATION - GENERAL

.1 Select material sizes to minimize waste.

.2 Reuse scrap to the greatest extent possible; clearly separate scrap for use on site as accessory components, including: shims, bracing, and blocking.

.3 Where treated wood is used on the interior, provide temporary ventilation during and immediately after installation sufficient to remove indoor air contaminants.

3.03 BLOCKING, NAILERS, AND SUPPORTS

.1 Provide framing and blocking members as indicated or as required to support finishes, fixtures, specialty items, and trim.

.2 In walls, provide blocking attached to studs as backing and support for wall-mounted items, unless item can be securely fastened to two or more studs or other method of support is explicitly indicated.

.3 Where ceiling-mounting is indicated, provide blocking and supplementary supports above ceiling, unless other method of support is explicitly indicated.

3.04 ROOF-RELATED CARPENTRY

.1 Coordinate installation of roofing carpentry with deck construction, framing of roof openings, and roofing assembly installation.

.2 Coordinate with Sections 07 52 00 - Modified Bituminous Membrane Roofing and 07 62 00 - Sheet Metal Flashing and Trim and install blocking, cants, fascia backing, nailers, curbs and other wood supports as required and secure using galvanized steel fasteners.

.1 Install plywood and wood blocking at the entire perimeter of the flat roofs and as detailed. Construct the tops of parapet walls with a backslope as indicated on the *Drawings*.
Support all ends of plywood and fasten to the substrate at a rate of 20 fasteners/m^2, equally spaced.

.2 Where applicable, match the height of the blocking with the height of insulation.

.3 Anchor blockings to the deck 300 mm o.c. to resist a force of 2.5 kN/m in any direction.

.3 Provide wood curbs at all roof openings except where specifically indicated otherwise. Form corners by alternating the lapping side members.

3.05 INSTALLATION OF CONSTRUCTION PANELS

.1 Communications and Electrical Room Mounting Boards: Secure with screws to studs with edges over a firm bearing; space fasteners at maximum 610 mm o.c. on all edges and into the studs in the field of the board.

.1 At fire-rated walls, install the board over the gypsum board indicated as part of the fire-rated assembly.

.2 Where boards are indicated as full floor-to-ceiling height, install with the long edge of board parallel to the studs.

.3 Install adjacent boards without gaps.

.4 Size and Location: As indicated on the *Drawings* or as required by the electrical or communications *Contractor*.

3.06 SITE APPLIED WOOD TREATMENT

.1 Apply preservative treatment compatible with factory applied treatment to surfaces exposed by cutting, trimming, or boringcuts, in accordance with the manufacturer's instructions.

.2 Allow preservative to dry prior to erecting members.

3.07 TOLERANCES

.1 Framing Members: 6 mm from true position, maximum.

.2 Surface Flatness of Floor: 1 mm/m maximum, and 7 mm in 10 m maximum.

.3 Variation from Plane (Other than Floors): 2 mm/m maximum, and 7 mm in 10 m maximum.

3.08 CLEANING

.1 Waste Disposal: Comply with the requirements of Division 01, General and Supplementary conditions of the Contract.

.1 Comply with applicable regulations.

.2 Do not burn scrap on *Project* site.
.3 Do not burn scraps that have been pressure treated.
.4 Do not send materials treated with pentachlorophenol, CCA, or ACA to co-generation facilities or “waste-to-energy” facilities.

.2 Do not leave any wood, shavings, sawdust, etc. on the ground or buried in fill.

.3 Prevent sawdust and wood shavings from entering the storm drainage system.

END OF SECTION 06 10 00

SECTION 06 41 16
PLASTIC-LAMINATE-CLAD WOOD CASEWORK

PART 1 GENERAL

1.01 RELATED DOCUMENTS

.1 *Drawings* and general provisions of the *Contract*, including General and Supplementary Conditions and Division 01 *Specifications* sections, apply to this section.

1.02 SECTION INCLUDES

.1 Work Included: The work of this section includes the provision of all labour, materials, equipment and *Services* required to execute architectural wood casework, as indicated on the *Drawings,* as specified herein and as required for a complete *Project.*

.2 The *Work* incudes:

- .1 Custom fabricated plastic-laminate-faced casework units.
- .2 Plastic Laminate countertops.
- .3 Cabinet hardware.
- .4 Provision for related utilities.

1.03 RELATED REQUIREMENTS

.1 Section 06 10 00 - Rough Carpentry: Support framing, grounds, and concealed blocking.

.2 Section 06 61 00 - Cast Polymer Fabrications: solid surface countertops.

.3 Section 07 92 00 - Joint Sealants.

.4 Section 08 80 00 - Glazing: Glass for casework (as required in *Drawings*.)

.5 Section 09 00 00 - Master Finish Schedule (Refer to Drawings) *.

1.04 REFERENCE STANDARDS

.1 ANSI A208.2 - American National Standard for Medium Density Fiberboard for Interior Use 2009.

.2 AWMAC/WI (NAAWS) - North American Architectural Woodwork Standards, Canada Version 4.0 2021.

.3 CAN/CGSB 71.20 - Adhesive, Contact, Brushable 1988.

.4 CAN/CSA O121 - Douglas Fir Plywood 2017 (Reaffirmed 2022).

.5 CAN/CSA O141 - Softwood Lumber 2005 (Reaffirmed 2019).

.6 NEMA LD 3 - High-Pressure Decorative Laminates 2005.

.7 NLGA (SGRNL) - Standard Grading Rules for Canadian Lumber 2017.

.8 ULC (DIR) - Online Certifications Directory (Canada) Current Edition.

1.05 DEFINITIONS

.1 *Plywood:* Layers or plies of wood veneer, permanently bonded together in panels with the grain of each layer at 90° to adjacent layers. The outer plies are called face and back. The inner plies are called the "core". The term "plywood", as used in this *Specifications* section, does not include *Products* manufactured with particleboard, hardboard or fibreboard cores.

.2 *Exposed Surfaces:* all surfaces visible when doors and drawers are closed including bottoms of cabinets or display cases 1220 mm or more above finished floor and visible members in open cases or behind clear glass doors. Both sides of cabinet doors shall be considered exposed.

.3 *Semi-exposed Surfaces:* members behind solid doors, such as shelves, dividers, interior faces of ends, case backs, backs and bottoms and the tops of cases 1980 mm above finished floor.

.4 *Concealed Surfaces:* sleepers, web frames, dust panels and all other surfaces not visible after installation.

1.06 SUBMITTALS

.1 See Division 01, General and Supplementary conditions of the Contract, for submittal procedures.

.2 *Shop Drawings:* Indicate the location of each item referenced to actual site dimensions, dimensioned plans and elevations, large-scale details, thicknesses of materials, attachment devices, scribe strip locations, locations of exposed fastenings and other components applicable to the work of this section.

.3 Indicate all materials, thicknesses, finishes and hardware.

.1 Show large-scale details at a scale that clearly indicates the assembly but no less than 1:5.

.2 Show locations and sizes of furring, blocking, and hanging strips, including concealed blocking and reinforcement installed by other trades.

.3 Show locations and sizes of cutouts and holes for plumbing fixtures, faucets, and other items installed in casework.

.4 Samples:

.1 Submit two (2) samples for each type, colour, pattern, and surface finish of high pressure decorative laminate, laid-up on the specified core material.

.1 Size: 300 mm by 300 mm.

.2 Include edge banding.

.2 Accepted samples will be the standard of acceptance for the remainder of the *Work.*

.5 *Product* Data:

.1 Provide complete manufacturer's technical *Product* data for each material and each item of hardware.

.2 Include installation instructions for each item of hardware.

.6 Cabinet Hardware Schedule:

.1 Provide a complete cabinet hardware schedule for the *Project.*

.2 Clearly indicate hardware proposed, including make, model, material, function, finish and all other pertinent information.

.3 The *Contractor 's* and the *Consultant's* review of the Hardware Schedule does not limit or release the applicable *contractor* from the responsibility to provide all necessary hardware and related components required for a complete installation as required by the authorities having jurisdiction.

.4 Certificate: Submit the fabricator's certification that all items conform to the specified requirements.

.7 Fabricator's Qualification Statement.

.8 Maintenance Data: Provide maintenance data for plastic laminate work for incorporation into the operation and maintenance manual specified in Division 01, General and Supplementary conditions of the Contract.

1.07 QUALITY ASSURANCE

.1 Regulatory Requirements: Provide materials that have fire test response characteristics acceptable to the authority having Jurisdiction and as follows:

.1 Provide materials and *Products* with the specified fire test response characteristics where fire retardant materials or *Products* are indicated.

.2 Confirm fire test response characteristics as determined by testing for identical *Products* and test methods indicated by CSA, ULC, or another testing and inspecting agency acceptable to the authority having jurisdiction.

.3 Identify casework materials with appropriate markings of the applicable testing and inspecting agency in the form of a separable paper label or, where required by authorities having jurisdiction, imprint on the surfaces of materials that will be concealed from view after installation.

.2 Fabricator Qualifications: Company specializing in fabricating *Products* similar to those specified in this section, with minimum five (5) years of documented experience.

.1 Accredited participant in the specified certification program prior to the commencement of fabrication and throughout the duration of the Project.

.3 Quality Certification:

.1 *Project* Quality Standard: AWMAC/WI (NAAWS) published by the Architectural Woodwork Manufacturers Association of Canada, together with authorized additions and amendments will be used as a reference standard and forms part of these *Specifications,* and as follows:

.1 Modifications made in this Section that change the requirements of the AWMAC/WI (NAAWS) will govern in case of conflict.

.2 References to Economy, Custom or Premium Grade in this specification are as defined in the AWMAC/WI (NAAWS); any item not given a specific quality grade will be Custom Grade as defined in the AWMAC/WI (NAAWS).

.2 Provide labels or certificates indicating that the installed work complies with AWMAC/WI (NAAWS) requirements for grade or grades specified.

.3 Provide designated labels on the *Shop Drawings* as required by certification program.

.4 Provide designated labels on installed *Products* as required by certification program.

.5 Submit certifications upon completion of installation that verifies this work is in compliance with specified requirements.

.6 Replace, repair, or rework all work for which certification is refused.

1.08 DELIVERY, STORAGE, AND HANDLING

.1 Protect units from moisture damage.

.2 Deliver, store, and handle casework in accordance with AWMAC/WI (NAAWS) Section 2: Care and Storage.

1.09 SITE CONDITIONS

.1 During and after installation of cabinets, maintain temperature and humidity conditions in building spaces at same levels planned for occupancy.

.2 Coordinate with applicable other trades to locate concealed framing, blocking, and reinforcements that support woodwork before being enclosed and indicate the precise locations on the *Shop Drawings.*

.3 Ambient Conditions: Maintain the area or room in which casework is being installed at a uniform temperature and humidity for 24 hours prior to, during and after installation in accordance with AWMAC/WI (NAAWS) recommendations.

.4 Provide additional lighting to maintain a minimum of 430 lx on surfaces and areas where casework is being installed.

1.10 WASTE MANAGEMENT AND DISPOSAL

.1 Cooperate with the waste management coordinator in the implementation of the waste management plan specified in Division 01, General and Supplementary conditions of the Contract.

.2 Handle and dispose of waste materials, including packaging materials, generated by the work of this section in accordance with the waste management plan.

PART 2 PRODUCTS

2.01 GENERAL REQUIREMENTS

.1 Wood and wood-based *Products* fabricated from old growth timber are not permitted.

.2 Provide lumber and wood-based *Products* that are FSC certified and are accompanied by a valid FSC chain-of-custody certificate number.

.3 Provide wood harvested within a 800 km radius of the *Project* site.

.4 Lumber salvaged from deconstruction or demolition of existing buildings or structures is permitted in lieu of sustainably harvested lumber provided it is clean, denailed, and free of paint and finish materials, and other contamination; identify source.

.5 Wood-based *Products* shall contain no added urea formaldehyde.

2.02 SOFTWOOD LUMBER

.1 S4S for members to receive finishes, S2S or S4S for members not to receive finishes, moisture content 19% or less for exterior work, 12% or less for interior work, in accordance with following standards:

.1 CAN/CSA O141.

.2 NLGA (SGRNL) Standard Grading Rules for Canadian Lumber.

.1 Furring, blocking, nailing strips, grounds, rough bucks, curbs, fascia backing and sleepers: Spruce-Pine-Fir, construction grade.

.2 Other components: Spruce-Pine-Fir, construction grade.

2.03 PANEL MATERIALS

.1 Plywood: Douglas Fir Plywood CAN/CSA O121, G1S or G2S sanded grade, S2S or better.

.2 Medium density fibreboard (MDF) to ANSI A208.2, 769 kg/m^3 density. Waterproof in wet locations.

.3 Laminated plastic: in accordance with QSI Section 200, based on grades established by NEMA LD 3, as follows.

.1 For types, colours and textures, refer to *Drawings.*

.2 Grades

.1 Horizontal surfaces: Grade HGS, horizontal general purpose, 1.2 mm thick.

.2 Vertical surfaces: Grade VGS, vertical general purpose, 0.7 mm thick.

.3 Cabinet liner (for semi-exposed surfaces): Grade CLS, 0.5 mm thick, white colour.

.4 Backer: Grade BKL, 0.5 mm thick, white colour.

2.04 FASTENERS AND ADHESIVES

.1 Nails and staples: Type and size to suit application; hot dipped galvanized for areas subject to high humidity, plain finish elsewhere.

.2 Wood screws: Electroplated, type and size to suit application.

.3 Draw bolts and splines for countertops: as recommended by fabricator.

.4 Adhesives:

.1 Generally as recommended by the architectural woodwork fabricator. Maximum VOC content 30 g/L (less water).

.2 Laminated plastic adhesive: contact adhesive to CAN/CGSB 71.20. Maximum VOC content 80 g/L (less water).

2.05 CABINETS

.1 Quality Standard: Custom Grade, in accordance with AWMAC/WI (NAAWS), unless noted otherwise.

2.06 LAMINATED-PLASTIC-FACED CASEWORK

.1 Fabricate casework in accordance with AWMAC/WI (NAAWS), custom grade, double-front, flush overlay type, except where otherwise indicated.

.2 Furring, blocking, nailing strips, grounds and rough bucks, sleepers and concealed framing: softwood lumber, pine species.

.3 Base: 19 mm DFP faced with stainless steel sheet.

.4 Concealed casework framing: Hardwood, species at the option of the fabricator.

.5 Case bodies (ends, divisions, bottoms, shelves, backs):

.1 DFP faced with laminated plastic.

.2 Thicknesses:

.1 Generally: 19 mm.

.2 Exposed backs: 13 mm.

.3 Concealed backs: 6 mm.

.6 Drawers:

.1 Fabricate drawers to AWMAC/WI (NAAWS), premium grade.
.2 Semi exposed fronts, sides and backs: 16 mm thick birch plywood. Grain direction: longitudinal.
.3 Bottoms: 6 mm thick birch plywood: Grain direction: longitudinal.
.4 Edges of drawer sides and backs: Fill all voids and sand smooth to receive transparent finish.

.7 Applied drawer fronts and cabinet doors:
.1 Generally: 19 mm MDF faced with laminated plastic.

.8 Finished edge banding, exposed and semi-exposed edges: Self-edge with matching laminated plastic.

2.07 COUNTERTOPS

.1 Laminated Plastic Flatwork: Where not otherwise indicated, fabricate countertops and vanities with plastic laminate on 19 mm fir plywood core. Provide self-edged backsplash at counter back and ends against walls and self-edged front-edge banding as indicated.

2.08 ACCESSORIES

.1 Nails and staples: Type and size to suit application; hot dipped galvanized for areas subject to high humidity, plain finish elsewhere.
.1 Wood screws: Electroplated, type and size to suit application.
.2 Draw bolts and splines for countertops: as recommended by fabricator.

.2 Sealer for laminated plastic: Water resistant sealer or glue acceptable to laminate manufacturer.

.3 Sealant caulking of back of countertops at wall: Refer to Section 07 92 00 - Joint Sealants

.4 Adhesives:
.1 Generally as recommended by the architectural woodwork fabricator.
.2 Laminated plastic adhesive: contact adhesive to CAN/CGSB 71.20.

.5 Bolts, Nuts, Washers, Lags, Pins, and Screws: Of size and type to suit application; galvanized finish in concealed locations and stainless steel finish in exposed locations.

.6 Concealed Joint Fasteners: Threaded steel.

.7 Grommets: Standard plastic, painted metal, or rubber grommets for cut-outs, in colour as indicated.

2.09 SHOP TREATMENT OF WOOD MATERIALS

.1 Provide ULC (DIR) listed and approved identification on fire retardant treated material.

.2 Deliver fire retardant treated materials cut to required sizes. Minimize field cutting.

2.10 FABRICATION

.1 Assembly: Shop assemble cabinets for delivery to site in units easily handled and to permit passage through building openings.

.2 Edging: Fit shelves, doors, and exposed edges with specified edging. Do not use more than one piece for any single length.

.3 Fitting: When necessary to cut and fit on site, provide materials with ample allowance for cutting. Provide matching trim for scribing and site cutting.

.4 Plastic Laminate: Apply plastic laminate finish in full uninterrupted sheets consistent with manufactured sizes. Fit corners and joints hairline; secure with concealed fasteners. Slightly bevel arises.

.1 Apply laminate backing sheet to reverse side of plastic laminate finished surfaces.

.2 Cap exposed plastic laminate finish edges with material of same finish and pattern.

.5 Mechanically fasten back splash to countertops as recommended by laminate manufacturer at 400 mm on center.

.6 Provide cutouts for plumbing fixtures. Verify locations of cutouts from on-site dimensions. Prime paint cut edges.

.7 Shop glaze glass materials using the Interior Dry method as specified in Section 08 80 00 - Glazing.

.8 Fabricate casework in accordance with QSI Section 400 to Custom quality grade, double-front, flush overlay type, except where otherwise indicated.

.9 Use dado construction for fixed shelves and intermediate gables. Use rabbet joint construction at top and bottom of end gables.

.10 Shop-install cabinet drawer hardware. Except where otherwise indicated, all cabinet shelves shall be adjustable.

.11 Provide cutouts for plumbing fixtures and fittings, inserts, appliances, outlet boxes, electric, telephone and computer cables, closed circuit TV cables and other fixtures. Install bushings at cable penetrations.

.12 Shop assemble work for delivery to site in size easily handled and to ensure passage through building openings.

2.11 LAMINATED PLASTIC APPLICATION

.1 Obtain governing dimensions before fabricating items which are to accommodate or abut appliances, equipment and other materials.

.2 Ensure adjacent parts of continuous laminate work match in colour and pattern.

.3 Veneer laminated plastic to core material in accordance with adhesive manufacturer's instructions. Ensure core and laminate profiles coincide to provide continuous support and bond over entire surface. Use continuous lengths up to 3 m. Keep joints 600 mm from lavatory or sink cutouts.

2.12 CABINET HARDWARE

.1 The cabinet hardware items listed herein have been selected to establish a standard of acceptance for the *Project.* Requests for *Substitutions* will be considered in accordance with the provisions of Division 01, General and Supplementary conditions of the Contract.

.1 Acceptance of alternative *Products* is subject to the approval of the *Consultant.*

.2 Provide the following cabinet hardware items as required for a complete *Project*:
- .1 Door and Drawer Pulls: Stainless Steel D-Pull. Standard of acceptance: Richelieu BP2214175
- .2 Cabinet door hinges: All metal, concealed casework hinges with cruciform mounting plates to provide gap, depth and height adjustment. Full overlay and half overlay as required, minimum 170 deg. opening. Cup diameter 35 mm. Finish: Bright nickel C14. Provide one self-closing and one free-swinging hinge per door. Standard of acceptance: Blum Clip 170 Series.
- .3 Magnetic catches: Richelieu # 520-30/5060, #5045-10, 9783-145.
- .4 Drawer Hardware: heavy duty, full extension, self-closing drawer slides, length to suit depth of drawer. Standard of acceptance:
  - .1 Accuride #214, #232.
  - .2 Blum #220M, #230M.
- .5 Adjustable shelf hardware: Steel standards for fully recessed mounting on cabinet gables, c/w matching shelf supports. Zinc-plated finish: Provide four (4) supports per shelf plus 10% spare. Standard of acceptance:
  - .1 Knape & Vogt #255 ZC standards, c/w # 256 ZC shelf supports.
  - .2 Rollit #120 standards, c/w # 102 shelf supports
- .6 Door and drawer bumpers: Provide two plastic press-in bumpers at each door and drawer. Peel and stick bumpers are not acceptable. Standard of acceptance: Richelieu #MP590.420-11.
- .7 Door and drawer locks: Richelieu #BP1220, #BP6587, #BP1202.
- .8 Coat rails: Chrome or nickel plated oval tube, 30 mm high x 15 mm wide, cut to required length. Provide matching end supports and intermediate hangers where required. Standard of acceptance:
  - .1 Hettich #015 992, c/w #016 880 end supports.
  - .2 Richelieu #170-140 or 170-3-140, c/w #7837-180 end supports.

PART 3 EXECUTION

3.01 EXAMINATION

- .1 Examine areas and conditions under which work is to be performed and notify the *Contractor* in writing of conditions detrimental to the proper and timely completion of the *Work*.
- .2 Verify adequacy of backing and support framing.
- .3 Verify location and sizes of utility rough-in associated with work of this section.
- .4 Take field measurements to verify or supplement dimensions and record on the *Shop Drawings.*
- .5 Do not proceed with the *Work* until unsatisfactory conditions have been corrected to the satisfaction of the installer.
- .6 Commencement of the installation will be construed as acceptance of the site conditions and, thereafter, the contractor shall be fully responsible for satisfactory work as specified herein.

3.02 INSTALLATION

.1 Install work in accordance with AWMAC/WI (NAAWS) requirements for grade indicated.

.2 Set and secure custom cabinets in place, assuring that they are rigid, plumb, and level.

.3 Use fixture attachments in concealed locations for wall mounted components.

.4 Use concealed joint fasteners to align and secure adjoining cabinet units.

.5 Installation of Cabinetwork

.1 Install cabinetwork at locations shown on *Drawings*. Position accurately, level, plumb and straight.

.2 Fasten and anchor cabinetwork securely. Provide heavy duty fixture attachments for wall mounted cabinets.

.3 Scribe and cut as required to fit abutting walls and to fit properly into recesses and to accommodate piping, cabling, columns, fixtures, outlets or other projecting, intersecting or penetrating objects.

.4 Make allowances around the perimeter where fixed objects pass through or project into laminated plastic work to permit normal movement without restriction.

.5 Keep countertop joints to a minimum; Use draw bolts and splines in countertop joints. Maximum spacing 450 mm o.c., 75 mm from the edge. Make flush hairline joints.

.6 Provide cutouts for inserts, grilles, appliances, outlet boxes and other penetrations. Round internal corners, chamfer edges and seal exposed core.

.7 At junction of laminated plastic counter and adjacent wall finish, apply small bead of sealant. Refer to Section 07 92 00 - Joint Sealants

.8 Apply bituminous coating over wood framing members in contact with masonry or cementitious construction.

.9 Fit hardware accurately and securely in accordance with manufacturer's directions. adjust operating parts for smooth, correct function.

.6 Carefully scribe casework abutting other components, with maximum gaps of 0.80 mm. Do not use additional overlay trim for this purpose.

.7 Secure cabinets to floor using appropriate angles and anchorages.

3.03 ADJUSTING

.1 Test installed work for rigidity and ability to support loads.

.2 Adjust moving or operating parts to function smoothly and correctly.

3.04 PROTECTION

.1 Protect installed work from damage.

3.05 CLEANING

.1 Clean casework, counters, shelves, hardware, fittings, and fixtures.

.2 Upon completion of the installation, remove from the premises all surplus material, dirt and debris caused by the work of this Section and leave the installation clean and ready for the intended use by the *Owner*.

.3 Make good damage to other work caused by the work of this section.

END OF SECTION 06 41 16

SECTION 07 14 16
COLD FLUID-APPLIED WATERPROOFING

PART 1 GENERAL

1.01 RELATED DOCUMENTS

.1 Drawings and general provisions of the Contract, including General and Supplementary Conditions and Division 1 Specification Sections, apply to this Section.

1.02 SECTION INCLUDES

.1 Fluid-Applied Waterproofing:

.1 Cold-applied modified-polymer elastomeric waterproofing.

1.03 RELATED REQUIREMENTS

.1 Refer to Structural Information:

.1 Cast-in-Place Concrete.

.2 Section 07 21 00 - Board and Batt Insulation: Insulation used for protective cover.

.3 Section 07 62 00 - Sheet Metal Flashing and Trim: Metal parapet covers, copings, and counterflashings.

.4 Section07 92 00 - Joint Sealants : Sealing moving joints in waterproofed surfaces that are not part of work in this section.

1.04 ABBREVIATIONS

.1 SBS - Styrene-Butadiene-Styrene.

.2 EPDM - Ethylene Propylene Diene Monomer

1.05 REFERENCE STANDARDS

.1 ASTM D4258 - Standard Practice for Surface Cleaning Concrete for Coating 2005 (Reapproved 2017).

.2 ASTM D5295/D5295M - Standard Guide for Preparation of Concrete Surfaces for Adhered (Bonded) Membrane Waterproofing Systems 2018.

.3 ASTM E96/E96M - Standard Test Methods for Gravimetric Determination of Water Vapor Transmission of Materials 2022.

.4 CAN/CGSB 37.51 - Application for Hot-Applied Rubberized Asphalt for Roofing and Waterproofing 1990.

.5 CAN/CGSB 37.58 - Membrane, Elastomeric, Cold-Applied Liquid, for Non-Exposed Use in Roofing and Water Proofing 1986.

.6 CGSB 37-GP-56M - Membrane, Modified, Bituminous, Prefabricated, and Reinforced for Roofing 1980.

.7 ISO 9000 - Quality management systems -- Fundamentals and vocabulary 2015.

1.06 SUBMITTALS

.1 See Division 01, General and Supplementary conditions of the Contract for submittal procedures.

.2 *Product* Data: Provide data for membrane, surface conditioner, flexible flashings, joint cover sheet, and joint and crack sealants.

.3 *Shop Drawings*: Indicate special joint or termination conditions and conditions of interface with other materials.

.4 Certificate: Certify that *Products* meet or exceed specified requirements.

.5 Manufacturer's Installation Instructions: Indicate special procedures, perimeter conditions requiring special attention, and acceptable installation temperatures.

.6 Manufacturer's Qualification Statement.

.7 Installer's Qualification Statement.

.8 Warranty:

.1 Submit manufacturer warranty and ensure that forms have been completed in *Owner*'s name and registered with manufacturer.

.2 Submit installer's certification that installation complies with warranty conditions for the waterproofing membrane.

.9 Prior to commencing the Work, submit copies of manufacturers current certification to ISO 9000. Membrane, primers, sealants, adhesives and associated auxiliary materials shall be included.

.10 Prior to commencing the *Work*, submit references clearly indicating that the materials proposed have been installed for not less than fifteen years on projects of similar scope and nature. Submit references for a minimum of ten projects.

.11 Prior to commencing the *Work* submit manufacturers complete set of standard details for waterproofing systems.

1.07 QUALITY ASSURANCE

.1 Membrane Manufacturer Qualification: Manufacturer shall demonstrate qualifications to supply materials of this section by certifying the following:

.1 Membrane Manufacturer must show evidence that the specified waterproofing materials has been manufactured by the same source for fifteen (15) years and successfully installed on a yearly basis for a minimum of fifteen (15) years on projects of similar scope and complexity

.2 Employ only skilled tradesmen who are experienced in this work.

.3 If requested by the *Owner* or the *Consultant*, provide evidence of previously completed projects of a similar nature.

.4 Conduct a preinstallation meeting before installation starts, with the following present:

.1 The *Owner.*

.2 *Contractor .*

.3 *Consultant*.

.4 Manufacturer's technical representative

.5 Applicable *contractor*.

.2 Installer Qualifications: Company specializing in performing work of the type specified and with at least three (3) years of documented experience.

.3 Perform *Work* in accordance with the printed requirements of the membrane manufacturer and this specification. Advise the *Consultant* of any discrepancies prior to commencement of the *Work.*

.4 Maintain one copy of manufacturers literature on site throughout the execution of the *Work*.

.5 At the beginning of the *Work* and at all times during the execution of the *Work*, allow access to site by the waterproofing membrane manufacturer's representative.

.6 Submit documentation certifying that the primary material complies with CAN/CGSB 37.58.

.7 Materials used in this Section, including, primers, mastics and membranes, asphaltic protection boards, composite drainage boards and expansion joint membranes shall be fully compatible and shall be sourced and or produced by one manufacturer.

1.08 SITE CONDITIONS

.1 Maintain ambient temperatures above 5 degrees C for 24 hours before and during application and until cured.

.2 Environnmental Requirements

.1 No installation work shall be performed during rainy or inclement weather and on frost or wet covered surfaces.

.2 Protection

.1 Provide adequate protection of materials and work of this section from damage by weather backfilling operations and other causes.

.2 Protect work of other trades from damage resulting from work of this section. Make good such damage at own expense to satisfaction of the *Consultant*.

.3 Apply protection board as soon as possible after installation of membrane.

1.09 WARRANTY

.1 See Division 01, General and Supplementary conditions of the Contract for additional warranty requirements.

.2 Correct defective *Work* within a five (5) year period after Date of *Ready-For-Takeover*; remove and replace materials concealing waterproofing at no cost to *Owner*.

.3 Provide five (5) year manufacturer warranty for waterproofing failing to resist penetration of water, except where such failures are the result of structural failures of building. Hairline cracking of concrete due to temperature change or shrinkage is not considered a structural failure.

.4 *Contractor* hereby warrants that the waterproofing membrane will stay in place and remain leakproof for two (2) years.

.5 Waterproofing membrane manufacturer hereby warrants that the waterproofing membrane will remain in a watertight condition and will not leak as a result of faulty materials for a period of five (5) years. Scope of warranty shall include materials required to return the membrane to a watertight condition.

1.10 DELIVERY, STORAGE AND HANDLING

.1 Deliver materials to the job site in undamaged and original packaging indicating the name of the manufacturer and *Product*.

.2 Cold applied elastomeric membrane should be stored in closed containers outdoors.
.3 Store membrane at temperature of 5 degrees C (40 degrees F) and above to facilitate handling.
.4 Membrane contain petroleum solvents and are flammable. Do not use near open flame.
.5 Store role materials horizontally in original packaging.
.6 Store adhesives and primers at temperatures of 5 degrees C and above to facilitate handling.
.7 Keep solvents away from open flame or excessive heat.

1.11 CO-ORDINATION

.1 Ensure continuity of the waterproofing membrane throughout the scope of this section.
.2 *Work* shall be so scheduled as to provide a watertight seal at the end of each *Working Day* on the areas worked upon during the day.

PART 2 PRODUCTS

2.01 COMPONENTS AND MATERIALS

.1 Components and materials must be obtained as a single-source from the membrane manufacturer to ensure total system compatibility and integrity. THE *Contractor* AND THE MANUFACTURER ARE RESPONSIBLE TO CONFIRM THE COMPATIBILITY AND APPROPRIATENESS OF THE SYSTEM BEING PROPOSED FOR THE SPECIFIC APPLICATION.

2.02 MANUFACTURERS

.1 Cold-Applied Modified-Polymer Elastomeric Waterproofing:
  .1 This specification is based on waterproofing membrane systems by Bakor.
    .1 Subject to compliance with the specification requirements, equivalent *Products* by the following manufacturers are acceptable alternatives:
      .1 Bakor (Henry Company Canada (800) 523 0268)
      .2 Carlisle Coating and Waterproofing (Beacon Roofing Supply (613) 744 5119)
      .3 Epro Services (Winroc (416) 886 1591)

2.03 FLUID APPLIED WATERPROOFING MATERIALS

.1 Cold-Applied Modified-Polymer Elastomeric Waterproofing:
  .1 Waterproofing Membrane: Single-component, elastomeric waterproofing meeting the requirements of CAN/CGSB 37.58, containing not less than 60 percent solids, compatible assembly components, able to develop bond to substrate under conditions of service and application indicated.
  .2 Suitable for installation over concrete substrates.
  .3 Products:

.1 Primary cold applied elastomeric waterproofing membrane in compliance with CAN/CGSB 37.58 shall be Aqua-Bloc® 770-06 Cold Applied Elastomeric Membrane manufactured by Bakor, a one component waterproofing compound compatible with sheet waterproofing membranes and substrates, having the following characteristics:
  .1 Elongation: 1500%,
  .2 Recovery: 85%
  .3 Water vapour permeance: 2.9 ng/Pa.m².s, ASTM E96/E96M.
  .4 Chemical resistance: Alkalis, calcium chloride, mild acid and salt solutions.

.2 Fabric reinforcement shall be Polyester Fabric as supplied by Bakor, a polyester reinforcement sheet capable of allowing the membrane to bleed through adequately to provide a monolithic reinforced membrane system.

2.04 FLASHING MEMBRANE

.1 Flashing membrane shall be modifiedPLUS® NP180s/s manufactured by Bakor, an SBS modified bitumen membrane having a minimum thickness of 2.2mm (90 mils) and a non-woven polyester reinforcement of 180 g/m2. *Product* shall be tested in accordance with CGSB 37-GP-56M Type 2 Class C Grade 2. The upper and lower surface shall be sanded.

.2 Flashing membrane shall be 990-25 Elastomeric Flashing Sheet with cold applied adhesive as supplied by Bakor, a flashing membrane composed of a combination of butyl and EPDM polymers.

2.05 DRAINAGE

.1 A dimpled membrane that wraps around the foundation to keep wet soil away from the wall shall be Platon Foundation Wrap by Armtec, Delta Drain 6000 or approved equivalent, installed as per manufacturers recommendation, having the following physical properties:
  .1 Thickness: 21mil
  .2 Water Vapour Permeability: 3.3
  .3 Dimple Height: 6mm

2.06 PREFABRICATED DRAINAGE BOARD ACCESSORIES

.1 Platon Plugs

.2 Platon Moulding Strip:

.3 Platon Speedclips

PART 3 EXECUTION

3.01 EXAMINATION

.1 Verify existing conditions before starting work.

.2 Examine areas and conditions under which work is to be performed and notify the *Contractor* in writing of conditions detrimental to the proper and timely completion of the *Work*.

.3 Do not proceed with the *Work* until unsatisfactory conditions have been corrected to the satisfaction of the installer.

.4 Take field measurements to verify or supplement dimensions.

.5 Commencement of the installation will be construed as acceptance of the site conditions and, thereafter, the *Contractor* shall be fully responsible for satisfactory work as specified herein

.6 Commencement of the installation will be construed as acceptance of the site conditions and, thereafter, the *Contractor* shall be fully responsible for satisfactory work as specified herein.

.7 Verify substrate surfaces are free of frozen matter, dampness, loose particles, cracks, pits, projections, penetrations, or foreign matter detrimental to adhesion or application of waterproofing system.

.8 Verify that substrate surfaces are smooth, free of honeycomb or pitting, and not detrimental to full contact bond of waterproofing materials.

.9 Verify items that penetrate surfaces to receive waterproofing are securely installed.

3.02 PREPARATION

.1 Protect adjacent surfaces from damage not designated to receive waterproofing.

.2 Clean and prepare surfaces to receive waterproofing in accordance with manufacturer's instructions.

.3 Remove loose or friable material to provide a sound surface free of laitance, glaze, efflorescence, and any remaining loose material and clean surfaces in accordance with ASTM D4258.

.4 Clean and prepare substrate in accordance with ASTM D5295/D5295M.

.5 Do not apply waterproofing to surfaces unacceptable to waterproofing manufacturer.

.6 Fill non-moving joints and cracks with a filler compatible with waterproofing materials.

.7 Seal moving cracks with sealant and non-rigid filler, using procedures recommended by sealant and waterproofing manufacturers and in accordance with CAN/CGSB 37.51.

.8 Prepare building expansion joints at locations as indicated on *Drawings*.

.9 Condition of Surfaces

.1 Before commencing work, ensure environmental and site conditions are suitable for installation of waterproofing membrane.

.2 The substrate shall be clean and dry, free from surface water, ice, snow or frost, dust, dirt, oil, grease, curing compounds or any other foreign matter detrimental to the adhesion of the waterproofing membrane.

.3 Allow a minimum 14-day cure for new concrete. Ensure concrete is smooth and free from voids and honeycombing prior to application of waterproofing membrane.

.4 Voids, cracks, holes and other damages horizontal or vertical surfaces shall be repaired before application of the membrane.

3.03 INSTALLATION

.1 Install waterproofing to specified minimum thickness in accordance with manufacturers instructions applicable requirements.

.2 Apply primer or surface conditioner at a rate recommended by manufacturer, and protect conditioner from rain or frost until dry.

.3 At joints and cracks less than 13 mm in width including joints between horizontal and vertical surfaces, apply 300 mm wide strip of joint cover sheet.

.4 At joints from 13 mm to 25 mm in width, loop joint cover sheet down into joint between 32 mm to 44 mm, and extend sheet at least 150 mm on either side of expansion joint.

.5 Center joint cover sheet over joints, roll sheet into 3 mm thick coating of waterproofing material and apply second coat over sheet extending at least 150 mm beyond sheet edges.

.6 Extend membrane over cants and up intersecting surfaces at membrane perimeter minimum 150 mm above horizontal surface for first ply and [____] mm at subsequent plies laid in shingle fashion.

.7 Apply extra thickness of waterproofing material at corners, intersections, and angles.

.8 Flexible Flashings: Seal items watertight that penetrate through waterproofing membrane with flexible flashings.

.9 Extend waterproofing material and flexible flashing into drain clamp flange, apply adequate coating of liquid membrane to ensure clamp ring seal, and coordinate with drain installation requirements specified in Mechanical *Drawings* and *Specifications.*

.10 Seal membrane and flashings to adjoining surfaces.

.1 Install termination bar along edges.

.2 Install counterflashing over exposed edges.

.11 Deck to Vertical Junctures, Cracks in Slab and Protrusions

.1 Coat penetrations, such as brackets, clips, braces, etc. that are set into the concrete with a 2.3 mm (90 mil) coating of primary waterproofing membrane to the height of the wearing course and around projections to ensure a complete seal prior to coating the entire area.

.2 Penetrations subject to movement should be flashed with fabric reinforcement set into a minimum thickness of 2.3 mm (90 mil) to required height on the wall and at least 100 mm (4”) on the slab and embed fabric reinforcement into wet coating.

.3 To all cracks and cold joints less than 3 mm (1/8”) apply a coat of primary waterproofing membrane at a minimum thickness of 2.3 mm (90 mil) and reinforce with fabric reinforcement.

.4 To all cracks greater than 3 mm (1/8”), apply standard gauge flashing sheet into wet primary waterproofing membrane. Overlap end joint of sheet a minimum 75 mm (3”).

.5 At monolithic wall/slab junctures, apply primary waterproofing membrane at a minimum thickness of 2.3 mm (90 mil) to required height on the wall and at least 100 mm (4”) on the slab and embed fabric reinforcement into wet primary waterproofing membrane.

.6 At non-monolithic wall/slab junctures, apply flashing membrane sheet to the required height on the wall and at least 100 mm (4”) on the slab into wet primary waterproofing membrane.

.12 Primary Waterproofing Membrane Application

.1 Single Coat Application (Vertical Applications)

.2 Apply a full and continuous coat of primary waterproofing membrane with a trowel, long handled squeegee, roofing brush or spray. Apply membrane at a rate of 2.5 l/m2 (6 gal. U.S./100ft.2) to provide a minimum wet thickness of 2.3 mm (90 mils) ensuring no pinholes or blisters.

.3 If pinholes or blisters persist use heavy-duty application.

.13 Heavy Duty Application (Horizontal Applications)

.1 Apply a full and continuous coat of primary waterproofing membrane at approximately 1.5 l/m2 (3.6 gal. US/100ft2) and embed Polyester Fabric into coating ensuring no fishmouths or wrinkles are created and allow to set.

.2 Apply second full and continuous coat of primary waterproofing membrane at 1.5 l/m2 (3.6 gal./100ft.2) and allow to cure.

3.04 INSTALLATION - DRAINAGE PANEL AND PROTECTION BOARD

.1 Immediately after cooling, dust membrane with tack-reducing surfacing at rate of approximately 4 kg/10 sq m.

.2 After membrane has cooled, but before it becomes dusty, apply separation sheet and lap joints to ensure complete coverage.

.3 Place drainage panel directly against membrane, butt joints, place to encourage drainage downward, and scribe and cut boards around projections, penetrations, and interruptions.

.4 Place protection board directly against drainage panel; butt joints, and scribe and cut boards around projections, penetrations, and interruptions.

.5 Adhere protection board to substrate with compatible adhesive.

.6 Installation of Drainage Board (Vertical)

.1 Align and hang drainage up to foundation wall. Position bottom edge of drainage board to be in moderate contact with weeping tile system.

.2 Secure drainage board to foundation wall with nails and washers spaced 450 mm o/c horizontally. Install minimum of 2 rows staggered and spaced 150 mm apart and min 150 from top edge.

.3 Align and install termination strip along top edge with nails spaced 300 mm o/c and seal with termination sealant.

.4 Align and install moulding strip over completed top edge detail.

.5 Overlap end laps, pull back loose fabric to expose drain core and position core of second panel over the overlap flange of first panel.

.6 Bend drain board to create inside corners and cut board to create outside corners, provide 75 mm of extra fabric to wrap corner.

.7 Stagger or offset joints of drain board sheets.

.8 Place all subsequent sheets in an overlapping single fashion.

.9 Backfill bottom edge in conjunction with weeping tile system.

.10 DRAINAGE BOARD TO LAP OVER THE WEEPING TILE.

3.05 PROTECTION

.1 Do not permit traffic over unprotected or uncovered membrane.

3.06 CLEAN-UP

.1 Promptly as the *Work* proceeds and on completion clean up and remove from site all rubbish and surplus materials resulting from the foregoing work.

END OF SECTION 07 14 16

This page intentionally left blank

SECTION 07 21 00
BOARD AND BATT INSULATION

PART 1 GENERAL

1.01 RELATED DOCUMENTS

.1 *Drawings* and general provisions of the *Contract,* including General and Supplementary Conditions and Division 01 *Specifications* sections, apply to this Section.

1.02 SECTION INCLUDES

.1 *Work* Included: The *Work* of this section includes the provision of all labour, materials, equipment and *Services* required to supply and install batt and blanket insulation, as indicated on the *Drawings*, as specified herein and as required for a complete *Project.*

1.03 RELATED REQUIREMENTS

.1 Cast-in-place Concrete: Structural Information.

.2 Section 07 21 19 - Spray-Applied Urethane Foam Insulation: Plastic foam insulation other than boards.

.3 Section 07 21 20 - Urethane Foam Insulating Sealant.

.4 Section 07 21 29 - Non-Combustible Spray-Applied Insulation: Sprayed-on, adhered fibrous insulation.

.5 Section 07 26 13 - Building Envelope Sheet Vapour Retarder **

.6 Section 07 26 16 - Under-Slab Sheet Vapour Retarder **

.7 Section 07 27 13 - Non-permeable Air/Moisture/Vapour Barrier **

.8 Section 07 27 16 - Permeable Air/Moisture Barrier **

.9 Section 07 52 16 - SBS Modified Bituminous Roofing

.10 Section 07 84 01 - Firestopping: Insulation as part of fire-rated through-penetration assemblies.

.11 Section 09 21 16 - Gypsum Board Assemblies: Acoustic insulation inside walls and partitions.

.12 Section 09 22 16 - Non-Structural Metal Stud Framing.

.13 Earthwork: Civil Information.

1.04 REFERENCE STANDARDS

.1 ASTM E2357 - Standard Test Method for Determining Air Leakage of Air Barrier Assemblies 2018.

.2 CAN/ULC S102 - Method of Testing for Surface Burning Characteristics of Building Materials and Assemblies 2018.

.3 CAN/ULC S114 - Test for Determination of Non Combustibility in Building Materials 2018.

.4 CAN/ULC S134 - Standard Method of Fire Test of Exterior Wall Assemblies 2013 (Reaffirmed 2018).

.5 CAN/ULC S701.1 - Standard for Thermal Insulation, Polystyrene Boards 2017.

.6 CAN/ULC S702.1 - Standard for Mineral Fibre Thermal Insulation for Buildings, Part 1: Material Specification 2021.

.7 CAN/ULC S704 - Standard for Thermal Insulation, Polyurethane and Polyisocyanurate, Boards, Faced 2017.

1.05 SUBMITTALS

.1 See Division 01, General and Supplementary conditions of the Contract, for submittal procedures.

.2 *Product* Data: Provide data on *Product* characteristics, performance criteria, and *Product* limitations.

.1 Include installation instructions for each *Product.*

.2 Include manufacturers' material safety data sheets for the safe handling of materials and *Products* in accordance with Workplace Hazardous Materials Information Service (WHMIS) requirements.

1.06 DELIVERY, STORAGE & HANDLING

.1 Deliver *Products* in original unopened packaging with legible manufacturer's identification.

.2 Store materials in strict accordance with the manufacturer's recommendations.

1.07 SITE CONDITIONS

.1 Install insulation adhesives within the ambient temperature range and weather conditions recommended by the manufacturer

1.08 WASTE MANAGEMENT AND DISPOSAL

.1 Cooperate with the waste management coordinator in the implementation of the waste management plan specified in Division 01 - General & Supplementary Requirements

.2 Handle and dispose of waste materials, including packaging materials, generated by the work of this section in accordance with the waste management plan.

PART 2 PRODUCTS

2.01 MANUFACTURERS

.1 The specified *Products* have been selected to establish a standard of acceptance.

.2 Requests for *Substitutions* will be considered in accordance with the provisions of Division 01, General and Supplementary conditions of the Contract. Acceptance of alternative *Products* is subject to the approval of the *Consultant.*

2.02 BOARD INSULATION MATERIALS

.1 Extruded Polystyrene (XPS) to CAN/ULC S701.1.

.1 Foundation wall insulation and where not otherwise indicated:

.1 Type IV, square ends, shiplap edges except where otherwise indicated, thickness as indicated, shiplap side joints, square end joints. Minimum RSI 0.87 m².°C/W per 25 mm thickness, compressive strength 210 kPa. Standard of Acceptance: Styrofoam SM.

.2 Below-grade horizontal insulation subject to vehicle loads:

.1 Type IV, square ends, shiplap edges except where otherwise indicated, thickness as indicated, shiplap side joints, square end joints. Minimum RSI 0.87 m².°C/W per 25 mm thickness, compressive strength 415 kPa. Standard of Acceptance: Styrofoam Highload 60.

.3 Provide R-15 insulation installed horizontally and vertically for minimum of 4 feet on the interior side of foundation wall below concrete slab for the entire perimeter of building envelope. Refer to *Drawings.*

.4 Provide R-20 insulation installed horizontally and vertically for a minimum of 4 feet out from the interior and exterior side of foundation wall below concrete slab at all locations of exterior doors. Refer to *Drawings.*

.2 Mineral wool insulation board made from basalt rock and steel slag to CAN/ULC S702.1.

.1 Non-combustible applications where indicated:

.1 Rigid, multi-purpose stone wool insulation board, thickness as indicated, Minimum RSI 0.75 m².°C/W per 25 mm thickness, compressive strength 17 kPa @ 10% compression. Standard of acceptance: Rockboard 60.

.2 Complies with fire resistance requirements indicated on the *Drawings* as part of an exterior non-load-bearing exterior wall assembly when tested in accordance with CAN/ULC S134.

.3 In locations where non-combustible wall assembly is required, semi-rigid, non-combustible Rockwool mineral wool to be used.

.4 For Roof Insulation refer to Section 07 52 16 - SBS Modified Bituminous Roofing

2.03 BATT INSULATION MATERIALS

.1 Mineral Fibre Batt Insulation: Semi-rigid preformed batt or blanket, complying with CAN/ULC S702.1; friction fit; unfaced flame spread index of 0 (zero) when tested in accordance with CAN/ULC S102.

.2 Mineral Fibre Batt Insulation: Unfaced, preformed mineral slag batt insulation in accordance with CAN/ULC S702.1.

.1 Combustibility: Rated non-combustible in accordance with CAN/ULC S114.

.2 Flame Spread Index: 5 or less, when tested in accordance with CAN/ULC S102.

.3 For interior acoustic and fire stopping batt insulation applications see Section 07 84 01 - Firestopping and Section 09 21 16 - Gypsum Board Assemblies.

.4 Thermal insulation batts:

.1 Mineral wool fibre batt insulation for metal stud application made from basalt rock and steel slag conforming to CAN/ULC S702.1, Type 1, minimum 40% recycled content, thicknesses as indicated. Standard of acceptance: Rockwool Comfortbatt thermal insulation batt.

.2 Fire Performance:

.1 Non-combustibility: To CAN/ULC S114.

.2 Surface Burning Characteristics: To CAN/ULC S102.

.3 Flame spread: 0.

.4 Smoke developed: 0

.5 Acoustical fire batts:

.1 Acoustical fire batts for interior partitions where acoustical insulation is called for and where the batt insulation constitutes part of a fire resistant assembly: AFB mineral wool fibre batt insulation made from basalt rock and steel slag, conforming to CAN/ULC S702.1, Type 1, minimum 40% recycled content, thicknesses as indicated. Standard of acceptance: Rockwool AFB acoustical fire batt.

.2 Fire performance:

.1 Non-combustibility: To CAN/ULC S114.

.2 Surface Burning Characteristics: To CAN/ULC S102.

.3 Flame spread: 0.

.4 Smoke developed: 0

2.04 ACCESSORIES

.1 Sheet Vapour Retarder: Specified in Section 07 26 13 - Building Envelope Sheet Vapour Retarder **.

.2 Tape: Reinforced polyethylene film with acrylic pressure sensitive adhesive.

.1 Application: Sealing of interior circular penetrations, such as pipes or cables.

.2 Width: As required for application.

.3 Temperature Resistance: Minus 40 degrees C to 100 degrees C.

.3 Flashing Tape: Special polyolefin film with high performance adhesive.

.1 Application: Interior window and door sill flashing tape.

.2 Width: As required for application.

.3 Temperature Resistance: Minus 40 degrees C to 100 degrees C

.4 Insulation Fasteners: Impaling clip of plastic with washer retainer and clips, to be mechanically fastened to the surface to receive insulation, length to suit insulation thickness and substrate, capable of securely and rigidly fastening insulation in place.

PART 3 EXECUTION

3.01 EXAMINATION

.1 Examine areas and conditions under which *Work* is to be performed and notify the *Contractor* in writing of conditions detrimental to the proper and timely completion of the *Work.*

.2 Verify that substrate, adjacent materials, and insulation materials are dry and that substrates are ready to receive insulation.

.3 Verify substrate surfaces are flat, free of honeycomb, fins, or irregularities.

.4 Do not proceed with the *Work* until unsatisfactory conditions have been corrected to the satisfaction of the installer.

.5 Commencement of the installation will be construed as acceptance of the site conditions and, thereafter, the *Contractor* shall be fully responsible for satisfactory work as specified herein.

3.02 WORKMANSHIP

.1 Do not install insulation until the *Work* behind it has been reviewed and accepted by the *Consultant*.

.2 Install insulation in strict accordance with the insulation manufacturer's written instructions, to maintain continuity of thermal, acoustical and fire protection to building elements and spaces.

.3 Apply single layer of insulation to produce the thickness indicated, except where multiple layers are indicated or required to make up total thickness. Offset both vertical and horizontal joints in multiple layer applications.

.4 Use only insulation that is undamaged, dry, unsoiled, free from chipped or broken edges, and has not been exposed at any time to ice and snow.

.5 Cut and trim insulation to a neat compression-fit in spaces. Do not compress insulation excessively to fit spaces. Butt joints tightly. Use largest possible dimensions to reduce number of joints.

.6 Fit insulation closely around electrical boxes, pipes, ducts, frames and other objects in or passing through insulation in accordance with the manufacturer's instructions.

.7 Keep insulation minimum 75 mm from heat emitting devices such as recessed light fixtures, and minimum 50 mm from sidewalls of chimneys and vents.

.8 Where necessary, retain insulation in position with mechanical fasteners recommended by the insulation manufacturer for the specific application.

.9 Do not enclose insulation until it has been reviewed and accepted by the *Consultant*.

3.03 BOARD INSTALLATION AT FOUNDATION PERIMETER

.1 Adhere a 150 mm wide strip of polyethylene sheet over construction, control, and expansion joints with double beads of adhesive each side of the joint.

.2 Install boards vertically on foundation perimeter.

.1 Butt edges and ends tightly to adjacent boards and to protrusions.

.3 Extend boards over expansion joints, unbonded to foundation on one side of joint.

.4 Cut and fit insulation tightly to protrusions or interruptions to the insulation plane.

3.04 BOARD INSTALLATION AT EXTERIOR WALLS

.1 Adhere a 150 mm wide strip of polyethylene sheet over expansion joints with double beads of adhesive each side of the joint.

.2 Install rigid insulation directly to steel studs or exterior grade sheathing and fasten at 406 mm o.c. with the insulation manufacturer's recommended mechanical fasteners, and tape joints with the manufacturer's recommended sealant tape, minimum 102 mm wide. Comply with ASTM E2357.

.3 Install boards vertically on walls.

.1 Butt edges and ends tightly to adjacent boards and protrusions.

.4 Extend boards over expansion joints, unbonded to wall on one side of joint.

.5 Cut and fit insulation tightly to protrusions or interruptions to the insulation plane.

.6 Place 150 mm wide polyethylene sheet at perimeter of wall openings, from adhesive vapour retarder bed to window and door frames, and tape seal in place to ensure continuity of vapour retarder and air seal.

3.05 BOARD INSTALLATION AT CAVITY WALLS

.1 Install boards to fit snugly between wall ties.
  .1 Place membrane surface against adhesive.
  .2 Place membrane surface facing out, and tape seal board joints.
.2 Install boards horizontally on walls.
  .1 Butt edges and ends tightly to adjacent boards and protrusions.
  .2 Place impale fastener locking discs.
.3 Cut and fit insulation tightly to protrusions or interruptions to the insulation plane.

3.06 BATT INSTALLATION

.1 Install insulation in accordance with the manufacturer's instructions.
.2 Install in wall spaces without gaps or voids. Do not compress insulation.
.3 Trim insulation neatly to fit spaces. Insulate miscellaneous gaps and voids.
.4 Fit insulation tightly in cavities and tightly to exterior side of mechanical and electrical services within the plane of the insulation.
.5 Retain insulation batts in place with spindle fasteners where necessary to keep insulation permanently in place.
.6 Coordinate work of this section with requirements for vapour retarder specified in Section 07 26 13 - Building Envelope Sheet Vapour Retarder **.

3.07 PROTECTION

.1 Do not permit installed insulation to be damaged prior to its concealment.

3.08 CLEANING

.1 Remove from the premises all surplus material, dirt and debris caused by the work of this section and leave the installation clean.
.2 Make good damage to other work caused by the work of this section

END OF SECTION 07 21 00

SECTION 07 21 19
SPRAY-APPLIED URETHANE FOAM INSULATION

PART 1 GENERAL

1.01 RELATED DOCUMENTS

.1 *Drawings* and general provisions of the *Contract,* including General and Supplementary Conditions and Division 01 *Specifications* sections, apply to this Section.

1.02 SECTION INCLUDES

.1 *Work* Included:

.1 The work of this section includes the provision of all labour, materials, equipment and *Services* required to install polyurethane foam insulating sealant, as indicated on the *Drawings*, as specified herein and as required for a complete *Project.*

.2 The *Work* includes:

.1 Medium density spray-applied foam insulation where indicated on the *Drawings*.

.2 Low density spray-applied foam insulating sealant for gap-filling at the perimeter of window and door openings and other locations where required to maintain the continuity of the building envelope thermal insulation.

1.03 REFERENCE STANDARDS

.1 AAMA 812 - Voluntary Practice for Assessment of Frame Deflection When Using One Component Polyurethane Foams for Air-Sealing Rough Openings of Fenestration Installations 2019.

.2 ASTM C411 - Standard Test Method for Hot-Surface Performance of High-Temperature Thermal Insulation 2019.

.3 ASTM C518 - Standard Test Method for Steady-State Thermal Transmission Properties by Means of the Heat Flow Meter Apparatus 2021.

.4 ASTM C1338 - Standard Test Method for Determining Fungi Resistance of Insulation Materials and Facings 2019.

.5 ASTM D1621 - Standard Test Method for Compressive Properties Of Rigid Cellular Plastics 2016.

.6 ASTM D1622/D1622M - Standard Test Method for Apparent Density of Rigid Cellular Plastics 2020.

.7 ASTM D1623 - Standard Test Method for Tensile And Tensile Adhesion Properties of Rigid Cellular Plastics 2017.

.8 ASTM D2126 - Standard Test Method for Response of Rigid Cellular Plastics to Thermal and Humid Aging 2020.

.9 ASTM D2842 - Standard Test Method for Water Absorption of Rigid Cellular Plastics 2019.

.10 ASTM D2856 - Standard Test Method for Open-Cell Content of Rigid Cellular Plastics by the Air Pycnometer 1994.

.11 ASTM E90 - Standard Test Method for Laboratory Measurement of Airborne Sound Transmission Loss of Building Partitions and Elements 2009 (Reapproved

2016).

.12 ASTM E96/E96M - Standard Test Methods for Gravimetric Determination of Water Vapor Transmission of Materials 2022.

.13 ASTM E283 - Standard Test Method for Determining the Rate of Air Leakage Through Exterior Windows, Curtain Walls, and Doors Under Specified Pressure Differences Across the Specimen 2004 (Reapproved 2012).

.14 ASTM E331 - Standard Test Method for Water Penetration of Exterior Windows, Skylights, Doors, and Curtain Walls by Uniform Static Air Pressure Difference 2000 (Reapproved 2016).

.15 ASTM E736/E736M - Standard Test Method for Cohesion/Adhesion of Sprayed Fire-Resistive Materials Applied to Structural Members 2019.

.16 ASTM E759/E759M - Standard Test Method for Effect of Deflection on Sprayed Fire-Resistive Material Applied to Structural Members 1992 (Reapproved 2020).

.17 ASTM E761/E761M - Standard Test Method for Compressive Strength of Sprayed Fire-Resistive Material Applied to Structural Members 1992 (Reapproved 2020).

.18 ASTM E859/E859M - Standard Test Method for Air Erosion of Sprayed Fire-Resistive Material (SFRM) Applied to Structural Members 1993 (Reapproved 2020).

.19 CAN/ULC S101 - Standard Methods of Fire Endurance Tests of Building Construction and Materials 2014.

.20 CAN/ULC S102 - Method of Testing for Surface Burning Characteristics of Building Materials and Assemblies 2018.

.21 CAN/ULC S124 - Standard Method of Test for the Evaluation of Thermal Barriers for Foamed Plastic 2018.

.22 CAN/ULC S127 - Standard Corner Wall Method of Test For Flammability Characteristics of Non-Melting Foam Plastic Building Materials 2014.

.23 CAN/ULC S705.1 - Standard for Thermal Insulation - Spray Applied Rigid Polyurethane Foam, Medium Density - Material Specification 2015.

.24 CAN/ULC S705.2 - Standard for Thermal Insulation - Spray Applied Rigid Polyurethane Foam, Medium Density - Application 2020.

.25 CAN/ULC S710.1-11 - Standard for Thermal Insulation – Bead-Applied One Component Polyurethane Air Sealant Foam Part 1: Material Specification .

.26 CAN/ULC S770 - Standard Test Method for Determination of Long-Term Thermal Resistance of Closed-Cell Thermal Insulating Foams 2015.

.27 CAN/ULC S774 - Standard Test Method for the Determination of Volatile Organic Compound Emissions From Polyurethane Foam 2020.

.28 MSDS - Material Safety Data Sheets Current Edition.

.29 UL 723 - Standard for Test for Surface Burning Characteristics of Building Materials Current Edition, Including All Revisions.

.30 ULC (DIR) - Online Certifications Directory (Canada) Current Edition.

.31 WHMIS - Workplace Hazardous Materials Information System Current Edition.

1.04 SUBMITTALS

.1 See Division 01 - General & Supplementary Requirements, for submittal procedures.

.2 *Product* Data: Provide manufacturer's complete technical *Product* data, *Product* description, insulation properties, overcoat properties, and preparation requirements. Including:

.1 Description and properties of each *Product.*

.2 *Product* storage and handling recommendations.

.3 Preparation requirements.

.4 Application instructions.

.1 Indicate special procedures, information on special environmental conditions required for installation and perimeter conditions requiring special attention.

.3 Manufacturer's material safety data sheets for the safe handling of the specified materials and *Products*, in accordance with Workplace Hazardous Materials Information System (WHMIS) requirements.

.4 Certification: Provide written certification, signed by the insulating sealant manufacturer, that

.1 The spray-applied foam insulation *Products* are fully compatible with the building air/vapour barrier membrane *Products.*

.2 Confirm that the membrane will not shrink and pull away from its substrate.

.3 Certify that the *Products* of this section meet or exceed specified requirements.

.5 Manufacturer's Qualification Statement.

.6 Installer's Qualification Statement.

1.05 QUALITY ASSURANCE

.1 Manufacturer Qualifications: Company specializing in manufacturing *Products* of the type specified in this section, with not less than three years of documented experience.

.2 Installer Qualifications: Company certified by CUFCA/NECA (Canadian Urethane Foam Contractors Association/National Energy Conservation Association).

.3 Provide proof of certification upon request.

.1 perform daily on-site testing as directed by material manufacturer/distributor and CUFCA/NECA.

.2 Maintain a copy of the manufacturer's installation manual on site.

1.06 ENVIRONMENTAL REQUIREMENTS

.1 Maintain temperature and humidity recommended by the material manufacturer before, during, and after installation.

1.07 COORDINATION

.1 Coordinate the work of this Section with all affected trades.

1.08 SITE CONDITIONS

.1 Maintain temperature and humidity recommended by the material manufacturer before, during, and after installation.

.2 Do not apply foam when temperature is within 3° of dew point.

.1 Apply insulation only when surfaces and ambient temperatures are between 5°C and 35°C.

.3 In accordance with CAN/ULC S774, do not permit occupancy until delivery of minimum 0.3 air changes per hour for 24 hours following installation.

1.09 DELIVERY, STORAGE & HANDLING

.1 Deliver *Products* in original unopened packaging with legible manufacturer's identification.

.2 Store materials in strict accordance with the manufacturer's recommendations.

1.10 SPECIAL PRECAUTIONS

.1 Conform to the recommendations of the MSDS for the *Product*.

.2 Wear protective gloves and eyewear.

.3 Shut off all pilot lights and other sources of ignition

.

1.11 WASTE MANAGEMENT AND DISPOSAL

.1 Cooperate with the Waste Management Coordinator in the implementation of the Waste Management Plan specified in Division 01, General & Supplementary conditions of the contract.

.2 Handle and dispose of waste materials generated by the work of this section in accordance with the waste management Plan.

PART 2 PRODUCTS

2.01 MANUFACTURERS

.1 The specified *Products* have been selected to establish a standard of acceptance.

.2 Requests for *Substitutions* will be considered in accordance with provisions of Division 01 - General & Supplementary Requirements. Acceptance of alternative *Products* is subject to the approval of the *Consultant*.

2.02 MEDIUM DENSITY SPRAY APPLIED URETHANE FOAM INSULATION FOR ALL APPLICATIONS EXCEPT GAP-FILLING LOCATIONS FOR WHICH LOW PRESSURE INSULATING FOAM IS SPECIFIED

.1 Two component HFO-based closed cell, spray-applied rigid cellular polyurethane foam air barrier and thermal insulation, medium density in accordance with CAN/ULC S705.1:

.2 Standard of acceptance: WALLTITE® CM01 and CM01CT (for cold weather application) polyurethane foam insulation by BASF Canada Inc. Properties as follows:

.1 Density (core) (ASTM D1622/D1622M): 29.6 kg/m3.

.2 Compressive strength (ASTM D1621): 236 kPa.

.3 Tensile strength (ASTM D1623): 313 kPa.

.4 Open cell content (ASTM D2856): 5.6%
.5 Water absorption (ASTM D2842): 0.58%.
.6 Permeance 50 mm sample (ASTM E96/E96M): 56.3 ng/Pa.s.m²Dimensional stability.
.7 Dimensional stability (ASTM D2126): % vol.change after 28 days:
  .1 @ 20°C: +1.4.
  .2 @ 70°C @ 97% +/-3%RH: +7.0.
  .3 @ 80°C: +5.9.
.8 Flame spread classification (CAN/ULC S102 & CAN/ULC S127):
  .1 Flame spread: 500.
  .2 Smoke developed: 500.
.9 Time to occupancy (CAN/ULC S774): 24 hours.
.10 Hot surface performance (ASTM C411): Passed when exposed to 93°C for 96 hours.
.11 Fungi resistance (ASTM C1338): No fungal growth exhibited.
.12 Long term thermal resistance (CAN/ULC S770):
  .1 50 mm thick: RSI 1.82 m².K/W (R10.3).
  .2 75 mm thick: RSI 2.83 m².K/W (R16.1).
  .3 100 mm thick: RSI 3.84 m².K/W (R21.8).
.13 Air barrier testing (NRC/IRC/CMCC) - 25.4 mm thickness: ≤ 0.02 l/s/m² at 75 Pa.
.14 Water Vapour Permeance: (ASTM E96/E96M, desiccant method): 60 ng/(Pa s sqm), qualifying as a vapour retarder in applied thicknesses of 50 mm and greater .
.15 Long term thermal resistance (CAN/ULC S770): Nominal RSI 0.9 per 25 mm thickness.
.16 Ozone depletion potential: Zero.
.17 Global warming potential: Less than 150.
.18 Volatile organic compounds (VOC's): Zero.

.3 Thermal barrier for foamed-In-Place Insulation exposed to the building interior after completion, (Flame Spread Protection): Spray applied, cement based fire resistant material, wet mix spray applied fireproofing meeting requirements of CAN/ULC S101, CAN/ULC S124, ASTM E736/E736M, ASTM E759/E759M, ASTM E761/E761M and ASTM E859/E859M; containing no asbestos fibre, ULC labelled and listed for assemblies and fire ratings indicated on the *Drawings,* and as follows:
  .1 Water: Potable.
  .2 As recommended by the insulation manufacturer.
  .3 Compliant with the applicable buiding code requireme
  .4 Thin film intumescent and ignition suppressing coatings are not acceptable for *Work* of this *Project.*

.4 Damming Materials: In accordance with the tested assembly being installed as acceptable to the authorities having jurisdiction, and as recommended by manufacturer.

.5 Firestopping Mortar: Cementitious, single component fire resistive mortar coating; tested, listed, and certified by ULC.

2.03 LOW PRESSURE INSULATING FOAM SEALANT:

.1 For gap-filing at window and door opening perimeters and other locations where required to maintain the continuity of the building envelope insulation:

.2 One component open cell foamed-in-place insulation in accordance with CAN/ULC S710.1-11.

.3 Standard of acceptance: CF 812 Window & door pro low pressure filler foam by HILTI, characteristics as follows:

.1 Foam yield per can: Approx. 1.30ft^3

.2 Approximate cure time: Tack-free after 8 to 10 minutes

.3 Application temperature: 5°C to 35°C.

.4 Air Infiltration (ASTM E283): < 0.003 m^3/m^2 @ 75 Pa.

.5 Water Infiltration (ASTM E331): No Leakage after 15 minute exposure @ 140 Pa.

.6 Sound Transmission Classification (ASTM E90): 55.

.7 Pressure Build Average (AAMA 812): 5.4 kPa.

.8 Dimensional Stability (AAMA 812): 2%.

.9 Tensile Strength (HTC Method 2106): > 6 N/cm^2

.10 R-Value (ASTM C518): RSI 0.74 (R 4.27).

.11 Surface Burning Characteristics (UL 723): Flame Spread: 0

.12 Shelf Life from Date of Manufacture:

2.04 ACCESSORIES

.1 Primers: As required by CAN/ULC S705.2, Annex A and to suit environmental conditions at time of application.

PART 3 EXECUTION

3.01 EXAMINATION

.1 Examine areas and conditions under which work is to be performed and notify the *Contractor* in writing of conditions detrimental to the proper and timely completion of the *Work*.

.2 Ensure that surfaces are free of dust, oil, grease and other loose debris which may impair bond.

.3 Verify *Work* within construction spaces or crevices is complete prior to insulation application.

.4 Do not proceed with the *Work* until unsatisfactory conditions have been corrected to the satisfaction of the installer.

.5 Commencement of the installation will be construed as acceptance of the site conditions and, thereafter, the *Contractor* shall be fully responsible for satisfactory *Work* as specified herein.

3.02 PREPARATION

.1 Mask and protect adjacent surfaces from overspray or dusting.

.2 Apply primer in accordance with the manufacturer's instructions.

3.03 APPLICATION - MEDIUM DENSITY URETHANE FOAM INSULATION

.1 Conduct inspections as required by CAN/ULC S705.2 and the manufacturer's application guidelines.

.2 Apply insulation in accordance with CAN/ULC S705.2 and the manufacturer's instructions. by qualified applicators. Before applying, ensure ambient temperature is within the range recommended by the manufacturer:

.1 For *Product* formulated for normal temperature range: 10°C to 40°C.

.2 For *Product* formulated for low-temperature application: -15°C to 10°C.

.3 Do not apply foam insulation in excess of 50 mm per pass due to the *Product*'s exothermic effect.

.1 After spraying a pass, allow cooling time for the dissipation of heat before spraying another pass.

.2 Not allowing adequate cooling time risks scorching and/or fire and affects *Product* longevity.

.4 In a cavity wall application, where adhesion strength of transition membrane is less than 103 kPa, mechanically fasten the transition membrane to substrate in accordance with manufacturer's application guidelines.

.5 Apply insulation and thermal barrier by spray method, to a uniform monolithic density without voids to achieve the required fire rating.

.6 Patch damaged areas.

3.04 APPLICATION - LOW PRESSURE URETHANE FOAM INSULATING SEALANT

.1 Apply foam insulating sealant in strict accordance with the manufacturer's printed directions, using dispensing gun recommended by material manufacturer. Fill all voids in the exterior wall insulation with sealant.

.2 When installing foam sealant around window and/or door frames, conform to the window and/or door manufacturer's instructions. In the event of conflict, proceed as directed by the *Consultant.*

.3 Apply in all locations where required to maintain the continuity of the insulation and/or the vapour barrier, including, but not necessarily limited to the following:

.1 Sealing voids at the perimeter of window and door frames.

.2 Sealing other voids in the exterior envelope of the building and at all locations where the continuity of the insulation is interrupted.

.4 Sealing at junctions between materials and components which comprise the air barrier as required to maintain continuity of the air barrier.

.5 All locations indicated on the *Drawings*.

.6 Note that this material expands several times its original volume when applied. Follow manufacturer's instruction and fill voids to allow for expansion and maximize curing.

.1 Ensure space for expansion to avoid pressure on adjacent *Products* that may bind operable parts.

.2 Trim excess foam away for applied trim or remove as required for a continuous sealant bead.

.7 If necessary, apply in several layers, each successive layer being allowed to cure before next layer is applied.

.8 While curing, foam to be tooled, if required.

.9 If leakage occurs after curing, cut back flush with surrounding surfaces or recess to sufficient depth to provide for finishing caulking.

3.05 CLEANING

.1 Upon completion of the work of this section remove from the premises all surplus material, dirt and debris caused by the work of this section and leave the installation clean.

.2 Remove masking and temporary protection from adjacent surfaces.

.3 Clean and make good damage to adjacent surfaces caused by the work of this Section.

3.06 SITE QUALITY CONTROL

.1 Site inspections and tests will be performed by an independent testing agency under provisions of Division 01, Supplementary and General conditions of the contract.

.2 Inspection will include verification of insulation thickness and density.

.3 Allow access to air barrier work areas and staging.

.4 Do not cover air barrier work until tested, inspected, and accepted.

3.07 PROTECTION

.1 Do not permit subsequent construction work to disturb applied insulation.

.2 If damage to applied insulation occurs, make good to the satisfaction of the *Consultant* and the authority having jurisdiction.

END OF SECTION 07 21 19

This page intentionally left blank

SECTION 07 21 29
NON-COMBUSTIBLE SPRAY-APPLIED INSULATION

PART 1 GENERAL

1.01 RELATED DOCUMENTS

.1 *Drawings* and general provisions of the *Contract,* including General and Supplementary Conditions and Division 01 *Specifications* sections, apply to this section.

1.02 SUMMARY OF WORK

.1 Work Included: The work of this Section includes the provision of all labour, materials, equipment and *Services* required to apply sprayed fibreglass insulation, as indicated on the *Drawings*, as specified herein and as required for a complete *Project*.

.2 The work includes:

.1 Spray-applied fibreglass insulation.
.2 Bonding adhesive (where recommended by the manufacurer).
.3 Surface sealer.

1.03 REFERENCE STANDARDS

.1 ASTM C518 - Standard Test Method for Steady-State Thermal Transmission Properties by Means of the Heat Flow Meter Apparatus 2021.

.2 ASTM D1622/D1622M - Standard Test Method for Apparent Density of Rigid Cellular Plastics 2020.

.3 ASTM E84 - Standard Test Method for Surface Burning Characteristics of Building Materials 2022.

.4 ASTM E136 - Standard Test Method for Assessing Combustibility of Materials Using a Vertical Tube Furnace at 750 Degrees C 2019a.

.5 CAN/ULC S102 - Method of Testing for Surface Burning Characteristics of Building Materials and Assemblies 2018.

.6 CAN/ULC S702.1 - Standard for Mineral Fibre Thermal Insulation for Buildings, Part 1: Material Specification 2021.

.7 ISO 354 - Acoustics Measurement of sound absorption in a reverberation room 2003.

.8 ISO 1182 - Reaction to fire tests for products — Non-combustibility test 2020.

.9 OBC MMAH Supplementary Standard SB-10 - Energy Efficiency Requirements 2016.

.10 ULC (DIR) - Online Certifications Directory (Canada) Current Edition.

1.04 SUBMITTALS

.1 See Division 01, General and Supplementary conditions of the *Contract* for submittal procedures.

.2 *Product* Data: Provide complete manufacturer's technical data on each *Product.*

.1 Include installation instructions. Indicate special procedures and perimeter conditions requiring special attention.

.2 Include manufacturers' material safety data sheets for the safe handling of materials and *Products* in accordance with Workplace Hazardous Materials Information System (WHMIS) requirements.

.3 Certificates: Certify that *Products* of this section meet or exceed specified requirements.

.4 Manufacturer's Qualification Statement.

.5 Installer's Qualification Statement.

1.05 QUALITY ASSURANCE

.1 Manufacturer Qualifications: A company specializing in manufacturing the *Products* specified in this section, with not less than three (3) years of documented experience.

.2 Installer Qualifications: A company specializing in performing work of the type specified and with at least three (3) years of documented experience and certified by the manufacturer as an approved installer

.3 *Products* Specified by Flammability Criteria: Listed and classified by ULC (DIR) and acceptable to the authorities having jurisdiction.

1.06 SITE CONDITIONS

.1 The work on this section shall be performed only under the conditions stated in the manufacturer's printed application instructions.

.2 At all times, provide sufficient heat and ventilation during installation and drying of spray insulation according to the manufacturer’s printed instructions.

.3 Maintain ambient and substrate surface temperatures recommended by the manufacturer, prior to, during, and after installation of primer and insulation materials and sealer.

1.07 WASTE MANAGEMENT AND DISPOSAL

.1 Cooperate with the waste management coordinator in the implementation of the waste management plan specified in Division 01, General and Supplementary conditions of the *Contract*.

.2 Handle and dispose of waste materials, including packaging materials, generated by the work of this section in accordance with the waste management plan.

PART 2 PRODUCTS

2.01 MANUFACTURERS

.1 This specification is based on Monoglass spray-applied insulation.

.2 Requests for *Substitutions*will be considered in accordance with the provisions of Division 01, General and Supplementary conditions of the *Contract*. Acceptance of alternative *Products* is subject to the approval of the *Consultant*.

2.02 SPRAY-APPLIED INSULATION

.1 White fibreglass/mineral fibre spray-applied insulation to CAN/ULC S702.1.

.1 Standard of acceptance: Monoglass by Monoglass Inc., characteristics as follows:

.1 Fibres: Type 902 Bio Soluble fiberglass.

.2 Thermal insulation shall not contain asbestos, free crystalline silica or combustible fibres.
.3 Fire Hazard Classification (ASTM E84; CAN/ULC S102):
  .1 Flame Spread = 0
  .2 Smoke Developed = 0.
.4 Non-Combustibility (ASTM E136; ISO 1182): Non-combustible
.5 Air Erosion (ASTM E859): No mass loss.
.6 Smoulder resistance (CGSB 51-GP-36P): Passed, 0.4% mean weight loss.
.7 Vibration resistance Type 1 (CGSB 51-GP-11M): Passed 0.02%mass loss.
.8 Dry density (ASTM D1622/D1622M): 48 kg/cu.m.
.9 Thermal conductivity (ASTM C518): RSI 0.70 per 25 mm.
.10 Noise reduction coefficient:
  .1 ASTM C423 - 35 mm on solid backing: NRC .85
  .2 ISO 354: NRC .75
    .1 25 mm on solid backing: NRC .75
    .2 50 mm on solid backing: NRC .95.

2.03 ACCESSORIES

.1 Bonding adhesive: Liquid bonding adhesive as recommended by the insulation manufacturer.
  .1 Mix bonding adhesive with fresh, clean water to the exact proportions recommended by the manufacturer.
.2 Primer: As recommended by insulation the manufacturer.
.3 Surface Sealer: Clear, latex based for placement over insulation.

PART 3 EXECUTION

3.01 EXAMINATION

.1 Examine areas and conditions under which work is to be performed and notify the *Contractor* in writing of conditions detrimental to the proper and timely completion of the *Work*.
.2 Verify that surfaces are clean, dry, and free of matter that may inhibit adhesion.
.3 Verify other work on and within spaces to be insulated is complete prior to application.
.4 Do not proceed with the *Work* until unsatisfactory conditions have been corrected to the satisfaction of the installer.
.5 Commencement of the installation will be construed as acceptance of the site conditions and, thereafter, the *Contractor* shall be fully responsible for satisfactory *Work* as specified herein.

3.02 PREPARATION

.1 Remove dust, dirt, foreign material, loose paint, etc. from surfaces to which the work is to be applied, which could otherwise create a false bond or staining of theinsulation. Clean and seal as required.

.2 Verify bond requirements and compatibility of all surfaces to receive thermal insulation materials.

.3 Ensure that all ducts, piping, equipment, or other items, which would interfere with the application of thermal insulation, are not positioned until thermal insulation work is completed.

.4 Mask and protect adjacent surfaces from overspray or damage.

.5 Apply primer in accordance with the manufacturer's instructions.

3.03 APPLICATION

.1 Mix and apply spray-applied insulation in strict accordance with the manufacturer's instructions.

.2 Apply insulation to the substrate in sufficient thickness to achieve the required thermal value as indicated on the *Drawings* and in accordance with applicable edition of ASHRAE Std 90.1 I-P for the envelope requirements for the building location and climate zone.

.1 Comply with OBC MMAH Supplementary Standard SB-10.

.3 Install sprayed insulation to a uniform monolithic density without voids.

.4

.5 Tamp wet sprayed insulation surface to improve adhesion and to achieve a smooth surface.

.6 Apply surface sealer monolithically and without voids; fully cover sprayed insulation.

3.04 SITE QUALITY CONTROL

.1 The *Owner* may appoint an independent agency to conduct a site inspection under provisions of Division 01, General and Supplementary conditions of the *Contract.*

.2 Inspection will include verification of sprayed insulation and surface sealer thickness and density.

3.05 CLEANING

.1 Remove sprayed thermal insulation from material and surfaces not specifically required to be insulated.

.2 Remove from the premises all surplus material, dirt and debris caused by the work of this section.

.3 Broom clean affected work areas and leave the installation clean.

.4 Make good damage to other work caused by the work of this section.

3.06 PROTECTION

.1 Do not permit subsequent construction work to disturb applied sprayed insulation.

.2 If damage to applied insulation occurs, make good to the satisfaction of the *Consultant* and the authority having jurisdiction.

END OF SECTION 07 21 29

SECTION 07 26 13
BUILDING ENVELOPE SHEET VAPOUR RETARDER **

PART 1 GENERAL

1.01 RELATED DOCUMENTS

.1 *Drawings* and general provisions of the *Contract,* including General and Supplementary Conditions and Division 01 *Specifications* sections, apply to this Section.

1.02 SUMMARY OF WORK

.1 Work Included: The work of this Section includes the provision of all labour, materials, equipment and *Services* required to install a sheet vapour retarder to exterior metal stud walls and elsewhere as indicated on the *Drawings*, as specified herein and as required for a complete *Project*.

.2 Related Sections:

.1 Section 07 21 00 - Board and Batt Insulation.
.2 Section 07 26 16 - Under-Slab Sheet Vapour Retarder **.
.3 Section 07 27 13 - Non-permeable Air/Moisture/Vapour Barrier **
.4 Section 07 27 16 - Permeable Air/Moisture Barrier **

1.03 DEFINITIONS

.1 Vapour Retarder: Airtight barrier made of material that is relatively water vapour impermeable, to the degree specified, with sealed seams and with sealed joints to adjacent surfaces.

.1 Water Vapour Permeance: For purposes of conversion, 57.2 ng/(Pa s sq m) = 1 perm.

1.04 REFERENCE STANDARDS

1.05 SUBMITTALS

.1 Refer to Division 01, General and Supplementary conditions of the contract.

.2 *Product* Data:

.1 Submit manufacturer's complete technical *Product* data on sheet vapour retarder and joint tape.
.2 Include installation instructions.

.3 Certification: Submit manufacturer's certification that materials comply with specified requirements.

1.06 DELIVERY, STORAGE AND HANDLING

.1 Deliver materials to the *Project* site in original packages with seals unbroken, labelled with manufacturer's name, *Product*, date of manufacturer, and directions for storage.

.2 Store materials in their original undamaged packages in a clean, dry, protected location and within the temperature range required by the material manufacturer. Protect stored materials from direct sunlight.

.3 Stack material off-ground on a wood platform.

.4 Protect materials during handling and application to prevent damage or contamination.

1.07 ENVIRONMENTAL REQUIREMENTS

.1 The specified *Product* is not intended for uses subject to abuse or permanent exposure to ultra violet light.

1.08 WASTE MANAGEMENT AND DISPOSAL

.1 Cooperate with the waste management coordinator in the implementation of the waste management plan specified in Division 01 - General & Supplementary Requirements

.2 Handle and dispose of waste materials, including packaging materials, generated by the work of this section in accordance with the waste management plan.

PART 2 PRODUCTS

2.01 MANUFACTURER

.1 This specification is based on MemBrain Smart Vapour Retarder by Certainteed Corporation.

.2 Requests for *Substitutions* will be considered in accordance with the provisions of Division 01 - General Requirements. Acceptance of alternative *Products* is subject to the approval of the *Consultant.*

2.02 MATERIALS

.1 Sheet vapour retarder: 0.051 mm nylon film vapour retarder, with the following minimum performance characteristics:

- .1 Surface burning characteristics:
  - .1 Flame spread index: maximum 25.
  - .2 Smoke development: maximum 450.
- .2 Water Vapour transmission rate:
  - .1 Standard dry cup method: 1 perm or less
  - .2 Wet cup method: 10 perms or greater.
- .3 Fungi Resistance: No growth.
- .4 Corrosion Resistance: No unusual aspect of corrosion such as pitting, cracking, and adhesive cure inhibition.
- .5 Standard of acceptance: MemBrainTM Smart Vapor Retarder by CertainTeed Corporation.

2.03 ACCESSORIES

.1 Seam tape: High density polyethylene tape with pressure sensitive adhesive. Minimum width: 75 mm.

.2 Fasteners:

- .1 Screws for light gauge metal framing: #7 x 11 mm plated steel or stainless self-tapping or self-drilling pan, cap, or washer head screws placed at 300 mm o.c. along the studs, head, and sill tracks. Do not use galvanized screws.

.2 Spray Adhesives for light gauge metal framing: Spray adhesives, such as 3M Spray 90 may be used at temperatures of 12°C and above.

.3 Tapes for light gauge metal framing: Double-sided carpet and foam tapes may be used at temperatures of 12°C and above.

.4 Staple Fasteners: 6 mm narrow crown staples minimum length 12 mm installed at 300 mm o.c. along studs and at head and sill.

.3 Electric outlet box pan: Purpose-made polyethylene press-formed pan.

.4 Polyethylene pan: Black polyethylene pan, moulded to fit between framing members to accommodate recessed equipment and electrical outlet boxes. Standard of acceptance: Polyvapor Hat as manufactured by Acro Foam and Plastics Limited.

PART 3 EXECUTION

3.01 EXAMINATION

.1 Examine areas and conditions under which *Work* is to be performed and notify the *Contractor* in writing of conditions detrimental to the proper and timely completion of the *Work*.

.2 Verify that *Services* are installed and have been reviewed and accepted by the *Consultant* prior to installation of the vapour retarder.

.3 Do not proceed with the *Work* until unsatisfactory conditions have been corrected to the satisfaction of the installer.

.4 Commencement of the installation will be construed as acceptance of the site conditions and, thereafter, the *Contractor* shall be fully responsible for satisfactory *Work* as specified herein.

3.02 SURFACE PREPARATION

.1 Prepare surfaces in accordance with the manufacturer's instructions.

3.03 INSTALLATION

.1 Install sheet vapour retarder in accordance with manufacturer's instructions.

.2 Install sheet vapour retarder on the warm side of exterior building envelope assemblies, prior to the installation of gypsum board, to form a continuous barrier.

.3 Unroll vapour retarder with the longest dimension parallel with the insulated wall.

.4 Lap vapour retarder over head and sill channels

.5 Use sheets of the largest practical size to minimize joints. Overlap vapour retarder joints 75 mm and seal with tape or sealant, as recommended by the vapour retarder manufacturer.

.6 Install the vapour retarder to form a complete and continuous envelope at exterior building elements, properly sealed at joints, fastenings and penetrations, effectively resisting moisture migration.

.7 Seal joints caused by pipes, conduits, electrical boxes, and similar items penetrating vapour retarders with tape of type recommended by vapour retarder manufacturer to create an airtight seal between penetrating objects and the vapour retarder.

.8 Minimize wrinkles along the stud faces to leave a flat surface to receive gypsum board.

.9 Inspect sheets for continuity. Repair punctures and tears with sealing tape or another layer of vapour retarder before work is concealed. Where a vapour retarder is punctured, apply a patch with a minimum of 150 mm overlap in any direction. Tape continuously around the perimeter of each patch.

.10 To ensure continuity of the vapour barrier at all locations, install strips of vapour barrier material of sufficient widths at all intersecting walls, at tops of walls at joist bearings, and at all other locations where subsequent work would otherwise interrupt the continuity of the vapour retarder membrane.

3.04 CLEANING

.1 Upon completion of the installation, Remove from the premises all surplus material, dirt and debris caused by the work of this section and leave the installation clean.

.2 Clean any drippage and spills of surplus sealant from adjacent surfaces.

.3 Make good damage to other work caused by the work of this section

END OF SECTION 07 26 13

SECTION 07 26 16
UNDER-SLAB SHEET VAPOUR RETARDER **

PART 1 GENERAL

1.01 RELATED DOCUMENTS

.1 *Drawings* and general provisions of the *Contract*, including General and Supplementary Conditions and Division 01 *Specifications* sections, apply to this Section.

1.02 SUMMARY OF WORK

.1 Work Included:

.1 The work of this Section includes the provision of all labour, materials, equipment and *Services* required to install under-slab vapour barriers, as indicated on the *Drawings*, as specified herein and as required for a complete *Project.*

.2 The work includes:

.1 Vapour barrier.

.2 Accessories including seam tape, mastic, pipe boots, and detail strip for installation under concrete slab.

1.03 RELATED SECTIONS

.1 Cast-in-place Concrete: Refer to Structural information.

.2 Backfilling: Refer to Civil information.

1.04 REFERENCES

.1 ASTM E1745 - Standard Specification for Plastic Water Vapor Retarders Used in Contact with Soil or Granular Fill under Concrete Slabs, 2017.

.2 ASTM E1643 - Standard Practice for Selection, Design, Installation, and Inspection of Water Vapor Retarders Used in Contact with Earth or Granular Fill Under Concrete Slabs, 2011 (Reapproved 2017).

1.05 SUBMITTALS

.1 Refer to Division 01 of this specification, and General and Supplementary conditions of the contract.

.2 *Product* Data: Submit complete manufacturer's technical data for each *Product.*

.1 Include installation instructions

.3 Quality Control/Assurance:

.1 If requested by the *Consultant,* submit a full set of test results in accordance with paragraph 9.3 of ASTM E1745 (including all after-conditioning permeance testing).

.2 Include a letter from the manufacturer certifying that the testing was conducted in compliance with paragraph 8.1 of ASTM E1745.

1.06 WASTE MANAGEMENT AND DISPOSAL

.1 Cooperate with the waste management coordinator in the implementation of the waste management plan specified in Division 01 of this specification, as well as Supplementary and General conditions of the contract.

.2 Handle and dispose of waste materials, including packaging materials, generated by the work of this section in accordance with the waste management plan.

PART 2 PRODUCTS

2.01 MANUFACTURER

.1 This specification is based on sheet vapour retarder material by Stego Industries LCC.

2.02 SHEET VAPOUR RETARDER

.1 Provide sheet vapour retarder with the following properties:

.1 Permeance as tested after conditioning (ASTM E1745 paragraph 7.1.2-7.1.5): less than 0.01 Perms (grains/ft2/hr/inHg) [0.570 ng/(Pa*s*m2)]

.2 Strength: ASTM E1745 Class A.

.3 Minimum thickness of the plastic retarder material: 0.38 mm [15 mils]

.2 Standard of acceptance: Stego Wrap Vapour Barrier (15-mil) by Stego Industries LLC., (877) 464-7834 CA-Stego www.stego.ca

2.03 ACCESSORIES

.1 Seam Tape: Use tape provided by the vapour barrier manufacturer.

.2 Vapour-proofing mastic: Use mastic provided by the vapour barrier manufacturer.

PART 3 EXECUTION

3.01 PREPARATION

.1 Examine areas and conditions under which *Work* is to be performed and notify the *Contractor* in writing of conditions detrimental to the proper and timely completion of the *Work*.

.2 Ensure that subsoil preparation has been accepted by the *Consultant* and the Geotechnical Engineer.

.3 Level and tamp or roll aggregate, sand or tamped earth base.

.4 Verify that site conditions are acceptable and are ready to receive the *Work*.

.5 Do not proceed with the *Work* until unsatisfactory conditions have been corrected to the satisfaction of the installer.

.6 Commencement of the installation will be construed as acceptance of the site conditions and, thereafter, the *Contractor* shall be fully responsible for satisfactory work as specified herein.

3.02 INSTALLATION

.1 Install under-slab sheet vapour retarder under all areas of slab on grade.

.2 Install sheet vapour retarder in accordance with manufacturer’s instructions and ASTM E1643:

.1 Unroll sheet vapour retarder with the longest dimension parallel with the direction of the pour.

.2 Lap the vapour retarder over footings and seal to foundation walls.

.3 Overlap joints 150mm and seal with the manufacturer’s tape.

.4 Seal all penetrations (including pipes) in accordance with the manufacturers instructions.

.5 Do not allow penetration of the vapour retarder except where required for reinforcing steel and permanent utilities.

.6 Repair damaged areas by cutting patches of sheet vapour retarder material, overlapping the damaged area minimum 150 mm and sealing all four sides with tape.

END OF SECTION 07 26 16

This page intentionally left blank

SECTION 07 27 13
NON-PERMEABLE AIR/MOISTURE/VAPOUR BARRIER **

PART 1 GENERAL

1.01 RELATED DOCUMENTS

.1 *Drawings* and general provisions of the *Contract*, including General and Supplementary Conditions and Division 01 *Specifications* sections, apply to this Section.

1.02 SUMMARY OF WORK

.1 Work Included: The work of this Section includes the provision of all labour, materials, equipment and *Services* required to install a membrane air barrier system, as indicated on the *Drawings*, as specified herein and as required for a complete *Project*.

.2 The work includes, but is not limited to:

- .1 A membrane air barrier to the building envelope.
- .2 Transition strips at the connections between different assemblies where required to maintain the continuity of the building envelope air barrier.
- .3 Connections of the walls to the roof air barrier.
- .4 Connections of the walls to the foundations.
- .5 Seismic and expansion joints.
- .6 Openings and penetrations of window and door frames, and curtain wall.
- .7 Piping, conduit, duct and similar penetrations.
- .8 Masonry ties, screws, bolts and similar penetrations.
- .9 All other air leakage pathways in the building envelope.

1.03 RELATED WORK:

.1 Section 06 10 00 - Rough Carpentry.
.2 Section 07 21 19 - Spray-Applied Urethane Foam Insulation.
.3 Section 07 26 13 - Building Envelope Sheet Vapour Retarder ** .
.4 Section 07 26 16 - Under-Slab Sheet Vapour Retarder **.
.5 Section 07 27 16 - Permeable Air/Moisture Barrier ** .
.6 Section 07 52 16 - SBS Modified Bituminous Roofing
.7 Section 08 11 13 - Hollow Metal Doors and Frames.
.8 Section 08 11 16 - Aluminum Doors and Frames.
.9 Section 09 21 16 - Gypsum Board Assemblies.

1.04 REFERENCES

.1 ASTM C920 - Standard Specification for Elastomeric Joint Sealants 2018.
.2 ASTM D146/D146M - Standard Test Methods for Sampling and Testing Bitumen-Saturated Felts and Woven Fabrics for Roofing and Waterproofing 2012.
.3 ASTM D412 - Standard Test Methods for Vulcanized Rubber and Thermoplastic Elastomers—Tension 2016 (Reapproved 2021).
.4 ASTM D882 - Standard Test Method for Tensile Properties of Thin Plastic Sheeting 2018.

.5 ASTM D1000 - Standard Test Methods for Pressure-Sensitive Adhesive-Coated Tapes Used for Electrical and Electronic Applications 2017.

.6 ASTM D1004 - Standard Test Method for Tear Resistance (Graves Tear) of Plastic Film and Sheeting 2021.

.7 ASTM D5147/D5147M - Standard Test Methods for Sampling and Testing Modified Bituminous Sheet Material 2018.

.8 ASTM E96/E96M - Standard Test Methods for Gravimetric Determination of Water Vapor Transmission of Materials 2022.

.9 ASTM E154/E154M - Standard Test Methods for Water Vapor Retarders Used in Contact with Earth Under Concrete Slabs, on Walls, or as Ground Cover 2008a (Reapproved 2019).

.10 ASTM E283 - Standard Test Method for Determining the Rate of Air Leakage Through Exterior Windows, Curtain Walls, and Doors Under Specified Pressure Differences Across the Specimen 2004 (Reapproved 2012).

.11 ASTM E330/E330M - Standard Test Method for Structural Performance of Exterior Windows, Doors, Skylights and Curtain Walls by Uniform Static Air Pressure Difference 2014 (Reapproved 2021).

.12 ASTM E331 - Standard Test Method for Water Penetration of Exterior Windows, Skylights, Doors, and Curtain Walls by Uniform Static Air Pressure Difference 2000 (Reapproved 2016).

.13 ASTM E2178 - Standard Test Method for Determining Air Leakage Rate and Calculation of Air Permeance of Building Materials 2021a.

.14 ASTM E2357 - Standard Test Method for Determining Air Leakage of Air Barrier Assemblies 2018.

.15 CAN/CGSB 51.33 - Vapour Barrier Sheet, Excluding Polyethylene, for Use in Building Construction 1989.

.16 CGSB 37-GP-56M - Membrane, Modified, Bituminous, Prefabricated, and Reinforced for Roofing 1980.

.17 CGSB 71-GP-24M - Adhesive, Flexible, for Bonding Cellular Polystyrene Insulation 1977.

.18 ISO 9001 - Quality management systems -- Requirements 2015.

.19 WHMIS - Workplace Hazardous Materials Information System Current Edition.

1.05 QUALIFICATIONS

.1 The air barrier membrane manufacturer shall be ISO certified. Upon request from the *Consultant*, submit copy of manufacturer certificate indicating that all *Products* supplied in this specification meet the requirements of ISO 9001 .

.2 The work of this Section shall be executed by a company approved by the material manufacturer as an applicator, using skilled tradesmen who are fully familiar with the application of air barrier membranes and are experienced in this work.

1.06 PERFORMANCE REQUIREMENTS

.1 The air barrier assembly and seals with adjacent construction shall be capable of performing as a continuous air barrier and as a liquid-water drainage plane

flashed to discharge incidental condensation or water penetration to the exterior.

.2 Air-barrier assemblies shall be capable of accommodating substrate movement and of sealing substrate expansion and control joints, construction material changes, penetrations**,** tie-ins to installed waterproofing, and transitions at perimeter conditions without deterioration and air leakage exceeding the specified limits.

.3 Provide a continuous air barrier to the entire building envelope with a maximum air leakage of 0.01 L/s.m^2 when tested to ASTM E283 at pressure a differential of 75 Pa and to ASTM E330/E330M at a pressure differential of 3000 Pa.

.4 Provide transition strips to maintain the continuity of the air barrier at the interface between adjacent construction elements such as the perimeter of window and door openings, wall/roof connections, and similar conditions where the continuity of the air barrier might otherwise be interrupted.

.5 The *Owner* may conduct air infiltration tests to verify the performance of the air barrier. In the event of failure to meet specification requirements, the *Contractor* shall make the necessary corrections at no additional cost to the *Owner.* The cost of re-inspection and re-testing shall be paid by the *Contractor.*

1.07 SUBMITTALS

.1 Refer to Division 01, General and Supplementary conditions of the *Contract.*

.2 *Product* Data:

.1 Provide complete manufacturer's technical *Product* data.

.2 Include installation instructions for the membrane air barrier.

.3 Include manufacturer's material safety data sheets for the safe handling of the specified materials and *Products,* in accordance with Workplace Hazardous Materials Information System (WHMIS) requirements.

1.08 ENVIRONMENTAL REQUIREMENTS

.1 Do not execute installation work during rainy or inclement weather or on frost covered or wet surfaces.

1.09 SEQUENCING AND COORDINATION

.1 Sequence work to permit installation of materials in conjunction with related materials and seals.

.2 Coordinate the work of this section with related other sections to ensure continuity of the air seal.

1.10 DELIVERY, STORAGE & HANDLING

.1 Deliver *Products* in original unopened packaging with legible manufacturer's identification.

.2 Store materials in strict accordance with the manufacturer's recommendations.

1.11 WASTE MANAGEMENT AND DISPOSAL

.1 Cooperate with the Waste Management Coordinator in the implementation of the Waste Management Plan specified in Division 01, General & Supplementary conditions of the Contract

.2 Handle and dispose of waste materials generated by the work of this Section in accordance with the Waste Management Plan.

1.12 WARRANTY

.1 For the work of this Section, the warranty period prescribed in Division 01, General and Supplementary conditions of the *Contract*, is extended to 7 years.

PART 2 PRODUCTS

2.01 GENERAL

.1 This specification is based on Blueskin SA Air Barrier Membrane by Bakor Inc.

.2 Requests for *Substitutions* will be considered in accordance with provisions of Division 01, General and Supplementary conditions of the *Contract*. Acceptance of alternative *Products* is subject to the approval of the *Consultant.*

2.02 MATERIALS

.1 Primary sheet air/moisture/vapour barrier membrane: SBS modified bitumen, self-adhering sheet membrane complete with a blue engineered thermoplastic film. Standard of acceptance: Blueskin® SA by Henry;with the following physical properties:

.1 Air leakage (ASTM E2357): 0.0001 CFM/ft² @1.6 lbs/ft2 to ASTM E2178 and ASTM E283 and no increased air leakage when subjected to a sustained wind load of 10.5 lbs/ft² for 1 hour and gust wind load pressure of 62.8 lbs/ft² for 10 seconds when tested at 1.6 lbs/ft² to ASTM E331.

.2 Vapor permeance (ASTM E96/E96M):

.1 Desiccant Method: 0.03 perms.

.2 Wet Cup Method: 0.08 perms

.3 Membrane Thickness: 0.0394 inches (40 mils),

.4 Low temperature flexibility (CGSB 37-GP-56M): -30°C.,

.5 Elongation (ASTM D412 - modifed): 200%.

.6 Meets CAN/CGSB 51.33 Type I water vapour permeance requirements.

.2 Self-adhering membrane for window and door opening perimeters, inside and outside corners and other transitions: SBS modified bitumen, self-adhering sheet membrane complete with surface layer of metallic aluminum film compatible with the sealant. Standard of acceptance HE200 AM Metal Clad by Henry, with the following physical properties:

.1 Peel Adhesion to Primed Steel (ASTM D1000): 15.0.

.2 Vapour Permeance (ASTM E96/E96M): < 0.014 perms.

.3 Membrane Thickness: 1.14 mm (45 mils).

.4 Low temperature flexibility (ASTM D146/D146M): Minimum -26°C.

.5 Elongation (ASTM D412 - modified): Minimum 40%.

.3 Through-wall flashing membrane (self-adhering): SBS modified bitumen, self-adhering sheet membrane complete with a yellow engineered thermoplastic film. Standard of acceptance: Blueskin® TWF by Henry, with the following physical propertie:

.1 Membrane Thickness: 1.01 mm (40 mils).

.2 Flow (ASTM D5147/D5147M): Pass @ 212 degrees F.
.3 Puncture Resistance (ASTM E154/E154M): 134 lbf.
.4 Tensile Strength (film) (ASTM D882): 5000 psi minimum ASTM D882,
.5 Tear Resistance (ASTM D1004: 45lbs-MD; 17lbs-CD.04,
.6 Low temperature flexibility (CGSB 37-GP-56M): -30°C.

2.03 PRIMER:

.1 Adhesive for self-adhering membranes at all temperatures: Synthetic rubber based adhesive, quick setting. Standard of acceptance: Blueskin® Adhesive by Henry, with the following physical properties:
.1 Colour: Blue,
.2 Weight: 6 lbs/gal,
.3 Solids by weight: 35%,
.4 Drying time (initial set): 30 minutes

2.04 PENETRATION AND TERMINATION SEALANT:

.1 Termination Sealant A moisture-cure, medium modulus polymer modified sealing compound. Standard of acceptance: HE925 BES Sealant by Henry, withe following physical properties:
.1 Compatible with sheet air barrier, roofing and waterproofing membranes and substrate,
.2 Complies with Fed. Spec. TT-S-00230C, Type II, Class A,
.3 Complies with ASTM C920, Type S, Grade NS, Class 25,
.4 Elongation: 450 – 550%,
.5 Remains flexible with aging,
.6 Seals construction joints up to 25 mm wide

2.05 INSULATION ADHESIVE

.1 Insulation adhesive: Synthetic, trowel-applied, rubber based adhesive. Standard of acceptance: Air-Bloc 21 Insulation Adhesive by Henry, with the following physical properties:
.1 Compatibility: With air barrier membrane, substrate and insulation,
.2 Air leakage (ASTM E283): 0.0026 CFM/ft^2 @ 2.1 lbs/ft^2.
.3 Water vapour permeance (ASTM E96/E96M): 0.03 perms.
.4 Long term flexibility: CGSB 71-GP-24M.

PART 3 EXECUTION

3.01 EXAMINATION

.1 Examine areas and conditions under which work is to be performed. Inspect all substrate surfaces and notify the *Contractor* in writing of conditions detrimental to the proper and timely completion of the *Work*.

.2 Ensure that surfaces are dry and provide a continuous sound substrate for the membrane.

.3 Ensure that substrates are clean of oil or excess dust; all masonry joints struck flush; all concrete surfaces free of large voids, spalled areas or sharp protrusions.

.4 Do not proceed with the *Work* until unsatisfactory conditions have been corrected to the satisfaction of the installer.

.5 Commencement of the installation will be construed as acceptance of the site conditions and, thereafter, the *Contractor* shall be fully responsible for satisfactory *Work* as specified herein.

3.02 PREPARATION

.1 Remove loose or foreign matter which might impair adhesion of materials.

.2 Clean and prime substrate surfaces to receive the air barrier in accordance with manufacturer's instructions. Not all surfaces require priming. Refer to the manufacturer's recommendations.

.3 Apply primer to surfaces by spray, brush or lambs wool roller at the rate of 2 to 6 m²/L, depending on porosity and texture of surface. Apply in accordance with the manufacturer's instructions.

.4 Allow the surface conditioner to dry completely (minimum 2 hours) before installing the air barrier membrane.

3.03 AIR BARRIER APPLICATION

.1 Apply air/moisture/vapour barrier membrane on the same day the final coating of primer is applied, in accordance with the manufacturer's instructions.

.2 Cut the membrane neatly around ties to form a tight seal. Seal the area around the ties and at any projections with rubberized mastic to ensure complete integrity of the membrane. Apply patches around all penetrations.

.3 After application, inspect the membrane for continuity.

.1 Repair punctures and tears with patches and obtain the *Consultant's* acceptance of the *Work* before concealing it.

.4 Coordinate with all trades to ensure the continuity of the air seal.

.5 In areas where continuity of the air/moisture/vapour barrier membrane cannot be achieved, and after review of the installed membrane by the *Consultant*, seal with low pressure insulating foam nsulating sealant specified in Section 07 21 19 - Spray-Applied Urethane Foam Insulation .

.6 Inside and outside corners:

.1 Seal inside and outside corners of the substrate with a strip of self-adhering air/moisture/vapour barrier membrane extending a minimum of 75 mm on either side of the corner detail.

.1 Prime surfaces in accordance with the manufacturer's instructions and allow to dry.

.2 Align and position self-adhering transition membrane; remove protective film and press firmly into place.

.1 Ensure minimum 50 mm overlap at all end and side laps of the membrane.

.2 Roll all laps and the membrane with a countertop roller to ensure a positive seal.

.7 Transition areas:

.1 Tie-in to structural beams, columns, floor slabs and intermittent floors, parapet curbs, foundation walls, roofing systems, and at the interface of dissimilar materials as indicated on the *Drawings* with self-adhering air/moisture/vapour barrier membrane.

.8 Windows and Rough Openings:

.1 Wrap rough openings with self-adhered air/vapour barrier membrane as detailed.

.1 Prime surfaces in accordance with the manufacturer's instructions and allow to dry.

.2 Align and position self-adhering transition membrane, remove protective film and press firmly into place. Ensure minimum 50 mm overlap at all end and side laps of the membrane.

.3 Roll all laps and the membrane with a countertop roller to ensure a proper seal.

.9 Through-Wall Flashing Membrane:

.1 Apply through-wall flashing membrane along the base of masonry veneer walls and over shelf angles as detailed.

.1 Prime surfaces and allow to dry, press the membrane firmly into place; overlap minimum 50 mm at end and side laps. Promptly roll laps and membrane to ensure a proper seal.

.2 Form a continuous flashing membrane and extend a minimum of 200 mm up the back-up wall.

.3 Seal the top edge of the membrane with termination sealant where it meets the substrate. Trowel-apply a feathered edge to termination sealant to shed water.

.4 Install a through-wall flashing membrane and extend 13 mm from the outside fac of the masonry veneer. Provide end dam flashing as detailed.

.10 Primary Air Barrier:

.1 Apply the self-adhering air/moisture/vapour barrier membrane, complete and continuous, to the prepared and primed substrate in an overlapping shingle fashion and in accordance with the manufacturer's recommendations and written instructions. Stagger all vertical joints.

.1 Prime surfaces in accordance with the manufacturer's instructions and allow to dry.

.2 Align and position self-adhering air/moisture/vapour barrier membrane; remove protective film and press firmly into place. Ensure a minimum 50 mm overlap at end and side laps of the membrane.

.3 Roll laps and membrane with a countertop roller to ensure a properseal.

.4 At the end of each day's work, seal the top edge of the membrane where it meets the substrate with termination sealant. Trowel apply a feathered edge to the termination sealant to shed water.

3.04 TRANSITION STRIPS

.1 Provide strips of air/moisture/vapour barrier membrane where indicated and wherever necessary to maintain the continuity of the air/moisture/vapour barrier at the interface between different construction assemblies.

.2 Use transition strips where necessary to form a continuous air seal to all windows and door frames and other penetrations. Install a 300 mm wide strip of membrane to effect the tie-in. Overlap the membrane minimum 75 mm.

.3 Use transition strips to maintain air/moisture/vapour barrier continuity at wall/roof connections and all other points of interface between different construction assemblies.

3.05 PROTECTION OF FINISHED WORK

.1 Protect finished *Work* from damage. Do not permit adjacent work to damage the work of this section.

.2 Where applicable. install board insulation as soon as possible after the air barrier membrane has been installed and reviewed by the *Consultant*.

3.06 CLEANING

.1 Upon completion of the installation, remove from the premises all surplus material, dirt and debris caused by the work of this section and leave the installation clean.

.2 Make good damage to other work caused by the work of this section.

END OF SECTION 07 27 13

SECTION 07 27 16
PERMEABLE AIR/MOISTURE BARRIER **

PART 1 GENERAL

1.01 RELATED DOCUMENTS

.1 *Drawings* and general provisions of the *Contract*, including General and Supplementary Conditions and Division 01 *Specifications* sections, apply to this Section.

1.02 SUMMARY OF WORK

.1 Work Included: The work of this Section includes the provision of all labour, materials, equipment and *Services* required to supply and install a membrane air/moisture barrier system, as indicated on the *Drawings*, as specified herein and as required for a complete *Project.*

.2 The work includes, but is not limited to:

- .1 A membrane air/moisture barrier to the building envelope.
- .2 Transition strips at the connections between different assemblies where required to maintain the continuity of the building envelope air/moisture barrier.
- .3 Adhesive/primer
- .4 Self-adhered water resistive air/moisture barrier
- .5 Air/moisture barrier/thru-wall flashing
- .6 Sealant

.3 Related Work:

- .1 Section 06 10 00 - Rough Carpentry.
- .2 Section 04 20 00 - Unit Masonry.
- .3 Section 07 26 13 - Building Envelope Sheet Vapour Retarder **.
- .4 Section 07 26 16 - Under-Slab Sheet Vapour Retarder **.
- .5 Section 07 27 13 - Non-permeable Air/Moisture/Vapour Barrier **
- .6 Section 07 42 13 - Insulated Metal Wall Panels - Standard Core *.
- .7 Section 07 42 15 - Insulated Metal Wall Panels - Mineral Wool Core *
- .8 Section 07 54 23 - Thermoplastic-Polyolefin (TPO) Roofing
- .9 Section 08 11 13 - Hollow Metal Doors and Frames.
- .10 Section 08 11 16 - Aluminum Doors and Frames.
- .11 Section 08 51 13 - Aluminum Windows.
- .12 Section 09 21 16 - Gypsum Board Assemblies.

1.03 REFERENCES

.1 ASTM C920 - Standard Specification for Elastomeric Joint Sealants, 2018.

.2 ASTM D412 - Standard Test Methods for Vulcanized Rubber and Thermoplastic Elastomers-Tension, 2016.

.3 ASTM D1970/D1970M - Standard Specification for Self-Adhering Polymer Modified Bituminous Sheet Materials Used as Steep Roofing Underlayment for Ice Dam Protection, 2017.

.4 ASTM D5147/D5147M - Standard Test Methods for Sampling and Testing Modified Bituminous Sheet Material, 2018.

.5 ASTM E96/E96M - Standard Test Methods for Water Vapor Transmission of Materials, 2016.

.6 ASTM E283 - Standard Test Method for Determining the Rate of Air Leakage Through Exterior Windows, Curtain Walls, and Doors Under Specified Pressure Differences Across the Specimen, 2004 (Reapproved 2012).

.7 ASTM E330/E330M - Standard Test Method for Structural Performance of Exterior Windows, Doors, Skylights and Curtain Walls by Uniform Static Air Pressure Difference, 2014.

.8 ISO 9001 - Quality management systems -- Requirements, 2015.

.9 WHMIS - Workplace Hazardous Materials Information System, Current Edition.

1.04 QUALIFICATIONS

.1 The air/moisture barrier membrane manufacturer shall be ISO certified. Upon request from the *Consultant,* submit copy of a manufacturer certificate indicating that all *Products* supplied in these *Specifications* meet the requirements of ISO 9001.

.2 The work of this section shall be executed by a company approved by the material manufacturer as an applicator, using skilled tradesmen who are fully familiar with the application of air/moisture barrier membranes and are experienced in this work.

1.05 PERFORMANCE REQUIREMENTS

.1 Provide a continuous air/moisture barrier to the entire building envelope with a maximum air leakage of 0.01 L/s.m^2 when tested to ASTM E283 at pressure a differential of 75 Pa and to ASTM E330/E330M at a pressure differential of 3000 Pa.

.2 Provide transition strips to maintain the continuity of the air/moisture barrier at the interface between adjacent construction elements such as the perimeter of window and door openings, wall/roof connections, and similar conditions where the continuity of the air barrier might otherwise be interrupted.

.3 The *Owner* may conduct air infiltration tests to verify the performance of the air/moisture barrier. In the event of failure to meet specification requirements, the *Contractor* shall make the necessary corrections at no additional cost to the *Owner.* The cost of re-inspection and re-testing shall be paid by the *Contractor*.

1.06 SUBMITTALS

.1 Refer to Division 01, General & Supplementary conditions of the *Contract*.

.2 *Product* Data:

.1 Provide complete manufacturer's technical *Product* data for each specified *Product.*

.2 Include installation instructions for the membrane air/moisture barrier.

.3 Include manufacturer's material safety data sheets for the safe handling of the specified materials and *Products*, in accordance with Workplace Hazardous Materials Information System (WHMIS) requirements.

1.07 ENVIRONMENTAL REQUIREMENTS

.1 Do not execute installation work during rainy or inclement weather or on frost covered or wet surfaces.

1.08 SEQUENCING AND COORDINATION

.1 Sequence the *Work* to permit the installation of materials in conjunction with related materials and seals.

.2 Coordinate the work of this section with related other sections to ensure continuity of the air/moisture seal.

1.09 DELIVERY, STORAGE & HANDLING

.1 Deliver *Products* in original unopened packaging with legible manufacturer's identification.

.2 Store materials in strict accordance with the manufacturer's recommendations.

1.10 WASTE MANAGEMENT AND DISPOSAL

.1 Cooperate with the Waste Management Coordinator in the implementation of the Waste Management Plan specified in Division 01, General & Supplementary conditions of the *Contract*.

.2 Handle and dispose of waste materials generated by the work of this section in accordance with the waste management plan.

1.11 WARRANTY

.1 For the work of this Section, the warranty period prescribed in Division 01 General Conditions of the *Contract* is extended to 7 years.

PART 2 PRODUCTS

2.01 GENERAL

.1 This specification is based on Blueskin VP 160 Air Barrier Membrane by Henry®.

.2 Requests for *Substitutions* will be considered in accordance with provisions of Division 01, General and Supplementary conditions of the *Contract*. Acceptance of alternative *Products* is subject to the approval of the *Consultant.*

2.02 MATERIALS

.1 Primary sheet-applied, vapour permeable water resistive air barrier: Self-adhered vapor permeable, water resistive air barrier consisting of a reinforced, modified polyolefin tri-laminate film surface and patented permeable adhesive technology with split-back poly-release film Standard of acceptance: Blueskin® VP160 by Henry®, with the following physical properties:

.2 Adhesives/Primers:

.1 Adhesive:

.1 Synthetic rubber based quick setting adhesive. Standard of acceptance: Blueskin® Adhesive by Henry®, with the following typical physical properties:

.1 Colour: Blue.

.2 Maximum VOC: 450 g/L.

.3 Drying time (initial set): 30 minutes.
.4 Low Application Temperature: -12°C.

.3 Aerosol spray adhesive:
.1 Quick drying spray adhesive used to prepare construction surfaces for the application of flashings. Standard of acceptance: Blueskin® Spray Prep Adhesive by Henry®, with the following typical physical properties:
.1 Colour: Clear amber
.2 Solids by weight: 35%
.3 Drying time (initial set): 3 minutes
.4 Low Application Temperature: -23°C.

.4 Quick setting primers:
.1 Synthetic rubber based quick setting adhesive with low VOC content. Standard of acceptance: Blueskin® LVC Spray Primer by Henry®, with the following typical physical properties:
.1 Colour: Blue
.2 Maximum VOC: 250 g/L
.3 Thickness: 14 mils (0.36 mm)
.4 Dry time: 1-3 minutes
.5 Water Vapour Permeance (ASTM E96/E96M): 0.14 perms
.6 Low Application Temperature: 40 degrees F (4.4°C.
.7 Nail Sealability (ASTM D1970/D1970M): Pass.
.8 Elongation (ASTM D412): 825% minimum

.5 Self-Adhered Flashing:
.1 Non-vapour permeable flashing for low temperature application (-4°C), self-adhered water resistive air and vapour barrier consisting of a synthetic butyl compound integrally laminated to a white engineered polypropylene film surface. Standard of acceptance: Blueskin® Butyl Flash by Henry®, with the following typical physical properties:
.1 Colour: White
.2 Thickness: 0.36 mm
.3 Water Vapour Permeance (ASTM E96/E96M): 0.14 perms
.4 Nail Sealability (ASTM D1970/D1970M): Pass
.5 Elongation (ASTM D412): 825% minimum
.6 Low Application Temperature: -4°C.

.6 Penetration and Termination Sealant:
.1 A moisture cure, medium modulus polymer modified sealing compound Termination sealant. Standard of acceptance: HE925 BES Sealant by Henry®, with the following physical properties:
.2 Compatible with sheet air barrier, roofing and waterproofing membranes and substrate,
.3 Complies with Fed. Spec. TT-S-00230C, Type II, Class A,
.4 Complies with ASTM C920, Type S, Grade NS, Class 25,
.5 Elongation: 450 – 550%,
.6 Remains flexible with aging,
.7 Seals construction joints up to 2wide

.7 Thru-Wall Flashing:

.1 Non-vapour permeable self-adhered through-wall flashing consisting of an SBS rubberized asphalt compound integrally laminated to a yellow engineered thermoplastic film surface. Standard of acceptance: Blueskin® TWF Thru-Wall Flashing by Henry®, having the following typical physical properties:
- .1 Colour: Yellow.
- .2 Thickness: 1.0 mm.
- .3 Water Vapor Permeance (ASTM E96/E96M): 0. 03 perms.
- .4 High Temperature Stability - Flow Resistance (ASTM D5147/D5147M): Pass.
- .5 Low Application Temperature: 4°C.

PART 3 EXECUTION

3.01 EXAMINATION

.1 Examine areas and conditions under which *Work* is to be performed. Inspect all substrate surfaces and notify the *Contractor* in writing of conditions detrimental to the proper and timely completion of the *Work*.

.2 Ensure that surfaces are dry and provide a continuous sound substrate for the membrane.

.3 Ensure that substrates are clean of oil or excess dust; all masonry joints struck flush; all concrete surfaces free of large voids, spalled areas or sharp protrusions.

.4 Do not proceed with the *Work* until unsatisfactory conditions have been corrected to the satisfaction of the installer.

.5 Commencement of the installation will be construed as acceptance of the site conditions and, thereafter, the *Contractor* shall be fully responsible for satisfactory *Work* as specified herein.

3.02 PREPARATION

.1 Remove loose or foreign matter which might impair adhesion of materials.

.2 Clean and prime substrate surfaces to receive air barrier in accordance with the manufacturer's instructions.

- .1 Not all surfaces require priming. Refer to the manufacturer's recommendations.

.3 Apply primer to surfaces by spray, brush or lambs wool roller at the rate of 2 to 6 m^2/L, depending on the porosity and texture of the surface. Apply in accordance with the manufacturer's instructions.

.4 Allow surface conditioner to dry completely (minimum 2 hours) before installing the air barrier membrane.

3.03 AIR BARRIER APPLICATION

.1 Apply air barrier membrane on the same day the final coating of primer is applied in accordance with manufacturer's instructions.

.2 Ensure the substrate is ready to receive the air barrier in accordance with the air barrier manufacturer’s installation guide and as specified in this section.

.3 Temperature limitation:

.1 The substrate temperature must be above -7°C and rising.
.2 Temperature limitations may vary. Refer to the manufacturer's *Product* data for *Product*- specific temperature limitations.

.4 Application of primary sheet-applied vapour permeable water resistive air barrier:
.1 Where required, apply adhesive/primer recommended by the air barrier manufacturer continuously and at the rate recommended by the manufacturer to ensure complete substrate coverage of the anticipated flashing installation area.
.2 Allow the adhesive/primer to cure to a tacky film prior to application of the air barrier.
.3 Primed areas not covered by the end of the day must be re-primed prior to installation of the air barrier.
.4 Allow adhesive/primer to cure to a tacky film prior to application of thair barrier.
.5 Primed areas not covered by the end of the day must be re-primed prior to installation of the air barrier.
.6 Peel the protective film from the primary air barrier and align top of the membrane, verifying proper positioning prior to complete film removal and air barrier placement.
.7 Press the primary air barrier firmly into place by applying hand pressure to the middle of the membrane and working the pressure to the edges; eliminating wrinkles and air bubbles.
.8 Install the primary air barrier in shingle fashion to eliminate reverse laps.
.9 For lap adhesion enhancements, install adhesive continuously and at the rate recommended by the air barrier manufacturer to ensure substrate coverage of theanticipated flashing installation area.
.10 Allow the adhesive/primer to cure to a tacky film prior to subsequent primary air barrier installation
.11 Horizontal applications:
.1 Horizontal seams: 50 mm minimum lap.
.2 Vertical seams: 75 mm minimum lap
.12 Roll the primary air barrier and laps with a countertop roller to obtain thorough adhesion.
.13 Seal permanent reverse laps of the primary air barrier with termination sealant.

3.04 APPLICATION OF FLASHING:

.1 Self-adhered flashing:
.1 Where required, apply adhesive/primer as recommended by the air barrier manufacturer continuously at recommended rate, ensuring complete substrate coverage of the anticipated flashing installation area.
.1 Allow the adhesive/primer to cure to a tacky film prior to flashing installation.
.2 Primed areas not covered by the end of the day must be re-primed prior to flashing installation.
.2 Measure and cut self-adhered flashing to ensure adequate length to achieve continuous coverage of the installation.

.3 Peel the protective film from the self-adhered flashing and align the top of the membrane, verifying proper positioning prior to complete film removal and flashing placement.
.4 .Press self-adhered flashing firmly into place by applying hand pressure to the middle of the membrane and working the pressure to the edges; eliminating wrinkles and air bubbles.
.5 Install self-adhered flashings in shingle fashion to eliminate reverse laps.
.6 Where required, prime laps at the rate recommended by the air barrier manufacturer to ensure complete coverage of the anticipated lap installation.
.7 Lap adjoining edges a minimum of two 50 mm.
.8 Roll the flashing and laps with a countertop roller to obtain thorough adhesion.
.9 Seal reverse laps at self-adhered flashing with sealant. Sealant recommendations may vary due to the *Product* or the sequence of construction. Refer to the air barrier manufacturer's details for recommended sealant.

3.05 THRU-WALL FLASHING:

.1 Thru-Wall Flashing:
.1 Coordinate with Section 07 27 13 - Non-permeable Air/Moisture/Vapour Barrier ** .

3.06 SPECIAL CONSIDERATIONS:

.1 Contact the air barrier manufacturer to verify *Product* and installation requirements.
.2 Wall assemblies identified as special conditions and requiring supplemental detailing may include, but are not limited to, any of the following:
.1 Panelized wall assemblies.
.2 Sloped wall assemblies.
.3 Rainscreen cladding systems permitting permanent direct exposure to bulk water onto the primary air barrier within a completed wall assembly.
.4 Claddings impeding drainage and/or promoting hydrostatic pressure:
.5 Horizontal Z-girts or furring strips installed directly onto the air barrier in a manner to encourage water collection.

3.07 FASTENER PENETRATIONS THROUGH THE PRIMARY AIR BARRIER:

.1 It is the responsibility of the installer penetrating the air barrier assembly to install fasteners and components in accordance with the air barrier manufacturer’s installation guide and as specified in this Section.
.2 Installation requirements:
.1 Drill fasteners and components with sufficient compression to maintain the continuity o the air barrier assembly.
.2 Refer to “Self-tapping fasteners” and/or “Pre-drilled fasteners”.
.3 Supplemental sealant:
.1 Penetrations that do not meet installation requirements require the addition of termination sealant at point of insertion through the air barrier

to maintain continuity in the air barrier assembly.

.4 Self-tapping fasteners:

.1 The fastener head/assembly component must be larger in diameter than the fastener shank.

.2 Install the fastener head/assembly component to provide a continuous compression firmly against the air barrier creating a gasketing seal without damaging the membrane.

.3 Do not install fasten components through the air barrier over unsupported areas of the substrate such as sheathing joints.

.5 Pre-drilled fasteners:

.1 The fastening head/assembly component must be larger in diameter than the predrilled hole.

.2 Install the fastening head/assembly component to provide a continuous compression firmly against the air barrier creating a gasketing seal without damaging the membrane.

.3 Do not install fastening components through the air barrier over unsupported areas of the substrate such as sheathing joints.

.4 Seal improperly drilled and/or vacated holes with termination sealant prior to installation of the exterior cladding.

3.08 TRANSITION STRIPS

.1 Provide strips of air barrier material where indicated and wherever necessary to maintain the continuity of the air barrier at the interface between adjacent construction assemblies.

.2 Use transition strips where necessary to form a continuous air seal to all window and door frame sections and other penetrations. Install a 300 mm strip of membrane to effect tie-in. Overlap membrane minimum 75 mm.

.3 Use transition strips to maintain air barrier continuity at wall/roof connections and all other points of interface between different construction assemblies.

3.09 PROTECTION OF FINISHED WORK

.1 Protect finished *Work* from damage. Do not permit adjacent work to damage the work of this section.

.2 Cover the air barrier membrane with subsequent construction as soon as possible after the membrane has been installed and reviewed and accepted by the *Consultant.*

3.10 CLEANING

.1 Upon completion of the air barrier installation, remove from the premises all surplus material, dirt and debris caused by the work of this section and leave the installation clean.

.2 Make good damage to other work caused by the work of this section.

END OF SECTION 07 27 16

SECTION 07 42 13
INSULATED METAL WALL PANELS - STANDARD CORE *

PART 1 GENERAL

1.01 RELATED DOCUMENTS

.1 *Drawings* and general provisions of the *Contract,* including General and Supplementary Conditions and Division 01 *Specifications* sections, apply to this Section.

1.02 SUMMARY OF WORK

.1 Work Included:

.1 The work of this Section includes the provision of all labour, materials, equipment, and *Services* required to fabricate and install insulated metal wall panel systems, as indicated on the *Drawings*, as specified herein, and as required for a complete *Project.*

.2 The work includes steel faced, factory-foamed polyisocyanurate core metal wall panels with side lap seals, complete with fasteners and perimeter trims/extrusions/flashings; sealants/gaskets between metal components.

.1 Vertical panels with exposed exterior finished faces.

.2 Vertical panel system, complete with a with support rail system for the attachment of metal cladding.

.3 For fire resistive type panel systems with mineral wool core, Refer to Section 07 42 15 - Insulated Metal Wall Panels - Mineral Wool Core * .

1.03 RELATED REQUIREMENTS

.1 Structural Steel Framing: Refer to Structural *Drawings*.

.2 Section 07 21 00 - Board and Batt Insulation.

.3 Section 07 46 10 - Metal Siding

.4 Section 07 62 00 - Sheet Metal Flashing and Trim.

.5 Section 078400 - Firestopping.

.6 Section 07 92 00 - Joint Sealants: Sealing joints between metal wall panel system and adjacent construction.

.7 Section 08 43 13 - Aluminum-Framed Storefronts

.8 Section 08 44 13 - Glazed Aluminum Curtain Walls.

.9 Section 08 51 13 - Aluminum Windows

1.04 REFERENCES

.1 AAMA 501.1 - Standard Test Method for Water Penetration of Windows, Curtain Walls and Doors Using Dynamic Pressure 2017.

.2 AAMA 501.2 - Quality Assurance and Diagnostic Water Leakage Field Check of Installed Storefronts, Curtain Walls, and Sloped Glazing Systems 2015.

.3 ASCE 7 - Minimum Design Loads and Associated Criteria for Buildings and Other Structures Most Recent Edition Cited by Referring Code or Reference Standard.

.4 ASTM A653/A653M - Standard Specification for Steel Sheet, Zinc-Coated (Galvanized) or Zinc-Iron Alloy-Coated (Galvannealed) by the Hot-Dip Process 2020.

.5 ASTM A755/A755M - Standard Specification for Steel Sheet, Metallic Coated by the Hot-Dip Process and Prepainted by the Coil-Coating Process for Exterior Exposed Building Products 2018.

.6 ASTM A792/A792M - Standard Specification for Steel Sheet, 55% Aluminum-Zinc Alloy-Coated by the Hot-Dip Process 2021a.

.7 ASTM B117 - Standard Practice for Operating Salt Spray (Fog) Apparatus 2019.

.8 ASTM C273/C273M - Standard Test Method for Shear Properties of Sandwich Core Materials 2020.

.9 ASTM C518 - Standard Test Method for Steady-State Thermal Transmission Properties by Means of the Heat Flow Meter Apparatus 2021.

.10 ASTM C591 - Standard Specification for Unfaced Preformed Rigid Cellular Polyisocyanurate Thermal Insulation 2021.

.11 ASTM D522/D522M - Standard Test Methods for Mandrel Bend Test of Attached Organic Coatings 2017 (Reapproved 2021).

.12 ASTM D523 - Standard Test Method for Specular Gloss 2014 (Reapproved 2018).

.13 ASTM D714 - Standard Test Method for Evaluating Degree of Blistering of Paints 2002 (Reapproved 2017).

.14 ASTM D968 - Standard Test Methods for Abrasion Resistance of Organic Coatings by Falling Abrasive 2022.

.15 ASTM D1308 - Standard Test Method for Effect of Household Chemicals on Clear and Pigmented Organic Finishes 2020.

.16 ASTM D1621 - Standard Test Method for Compressive Properties Of Rigid Cellular Plastics 2016.

.17 ASTM D1622/D1622M - Standard Test Method for Apparent Density of Rigid Cellular Plastics 2020.

.18 ASTM D1623 - Standard Test Method for Tensile And Tensile Adhesion Properties of Rigid Cellular Plastics 2017.

.19 ASTM D1929 - Standard Test Method for Determining Ignition Temperature of Plastics 2020.

.20 ASTM D2126 - Standard Test Method for Response of Rigid Cellular Plastics to Thermal and Humid Aging 2020.

.21 ASTM D2244 - Standard Practice for Calculation of Color Tolerances and Color Differences from Instrumentally Measured Color Coordinates 2021.

.22 ASTM D2247 - Standard Practice for Testing Water Resistance of Coatings in 100% Relative Humidity 2015 (Reapproved 2020).

.23 ASTM D2794 - Test Method for Resistance of Organic Coatings to the Effects of Rapid Deformation (Impact) 1993 (Reapproved 2019).

.24 ASTM D3359 - Standard Test Method for Rating Adhesion by Tape Test 2022.

.25 ASTM D3363 - Standard Test Method for Film Hardness by Pencil Test 2022.

.26 ASTM D4145 - Standard Test Method for Coating Flexibility of Prepainted Sheet 2010 (Reapproved 2018).

.27 ASTM D4214 - Standard Test Methods for Evaluating the Degree of Chalking of Exterior Paint Films 2007 (Reapproved 2015).

.28 ASTM D5894 - Standard Practice for Cyclic Salt Fog/UV Exposure of Painted Metal, (Alternating Exposures in a Fog/Dry Cabinet and a UV/Condensation Cabinet) 2016.

.29 ASTM D6226 - Standard Test Method for Open Cell Content of Rigid Cellular Plastics 2021.

.30 ASTM E72 - Standard Test Methods of Conducting Strength Tests of Panels for Building Construction 2015.

.31 ASTM E84 - Standard Test Method for Surface Burning Characteristics of Building Materials 2022.

.32 ASTM E283 - Standard Test Method for Determining the Rate of Air Leakage Through Exterior Windows, Curtain Walls, and Doors Under Specified Pressure Differences Across the Specimen 2004 (Reapproved 2012).

.33 ASTM E330/E330M - Standard Test Method for Structural Performance of Exterior Windows, Doors, Skylights and Curtain Walls by Uniform Static Air Pressure Difference 2014 (Reapproved 2021).

.34 ASTM E331 - Standard Test Method for Water Penetration of Exterior Windows, Skylights, Doors, and Curtain Walls by Uniform Static Air Pressure Difference 2000 (Reapproved 2016).

.35 ASTM G153 - Standard Practice for Operating Enclosed Carbon Arc Light Apparatus for Exposure of Nonmetallic Materials 2013 (Reapproved 2021).

.36 ASTM G154 - Standard Practice for Operating Fluorescent Ultraviolet (UV) Lamp Apparatus for Exposure of Nonmetallic Materials 2016.

.37 CAN/ULC S101 - Standard Methods of Fire Endurance Tests of Building Construction and Materials 2014.

.38 CAN/ULC S102 - Method of Testing for Surface Burning Characteristics of Building Materials and Assemblies 2018.

.39 CAN/ULC S127 - Standard Corner Wall Method of Test For Flammability Characteristics of Non-Melting Foam Plastic Building Materials 2014.

.40 CAN/ULC S134 - Standard Method of Fire Test of Exterior Wall Assemblies 2013 (Reaffirmed 2018).

.41 FM 4880 - Factory Mutual, Approval Standard for Class 1 Fire Rating of Building Panels or Interior Finish Materials 2015.

.42 FM 4881 - Factory Mutual, Approval Standard for Class 1 Exterior Wall Systems 2016.

.43 NFPA 259 - Standard Test Method for Potential Heat of Building Materials 2018.

.44 NFPA 268 - Standard Test Method for Determining Ignitibility of Exterior Wall Assemblies Using a Radiant Heat Energy Source 2012.

.45 NFPA 285 - Standard Fire Test Method for Evaluation of Fire Propagation Characteristics of Exterior Wall Assemblies Containing Combustible Components 2019.

.46 UL 263 - Standard for Fire Tests of Building Construction and Materials Current Edition, Including All Revisions.

1.05 ADMINISTRATIVE REQUIREMENTS

.1 Pre-installation meeting:

.1 The *Contractor* will conduct a pre-installation meeting at the job site attended by the *Owner*, the *Contractor* , *Consultant,* manufacturer's technical representative, installer, and other *Contractors* whose work affects or is affected by the work of this section.

.2 The agenda to include:

.1 Structural support requirements for the insulated wall panels.

.2 Details of construction and interface between the insulated wall panel system and adjacent construction.

.3 Other requirements specific to the *Project.*

1.06 SUBMITTALS

.1 Refer to Division 01, General and Supplementary conditions of the *Contract*.

.2 *Product* Data: Submit the manufacturer's current technical literature for each type of *Product.*

.3 *Shop Drawings:*

.1 To be provided by manufacturer-approved insulated metal panel *Contractor*.

.2 *Shop Drawings* producer to allow for time to review with manufacturer and to ensure to incorporate manufacturer's recommendations.

.3 Submit *Shop Drawings* for each type of panel system and each wall assembly. Include the following:

.1 Profile.

.2 Gauge, both interior and exterior sheet.

.3 Location, layout, dimensions and thickness of panels.

.4 Location and type of fastener

.5 Profiles and method of attachment of trim.

.6 Details at panel ends and joints, complete with location and types of accessories.

.7 Locations and type of sealants.

.8 Installation sequence.

.9 Coordination *Drawings:* Elevation *Drawings* and building sections showing panels in relationship to required locations for structural support.

.1 Include panel details, fastening and anchoring details, and attachments to structural support.

.10 Other details as required to ensure a weathertight installation.

.11 Distinguish between factory and field-assembled work.

.4 The panel system, including all related connections and fastenings, shall be designed by a structural engineer licensed to practise in the Province of the *Project*; and who is experienced in providing engineering *Services* of the kind indicated. Each of the *Shop Drawings* submitted shall bear the stamp and signature of the aforesaid structural engineer.

.1 Post Installation Certification: After installation of the Work, provide a written approval from the designing structural engineer, confirming the work was installed as per the approved *Shop Drawings.*

.5 Panel Analysis:

.1 Provide panel calculations to verify panels will withstand the design loads indicated, including wind loads, without detrimental effects or deflection exceeding L/180 or deflection as required by manufacturer, whichever is more restrictive.

.2 Include effects of thermal differential between the exterior and interior panel facings and resistance to fastener pullout.

.4 Samples:

.1 Provide a 150 mm x 150 mm sample of each colour and texture indicated.

.2 Provide a sample panel section, full width by 300 mm long, showing panel joints, profile and finish.

.5 Mock-Up

.1 Construct a minimum 2-panel wide, full height mock-up panel installation.

.2 Coordinate with Section 08 44 13 - Glazed Aluminum Curtain Walls and include the curtain wall mock-up to illustrate the joint between the curtain wall assembly and the wall panel assembly.

.3 Locate where directed by the *Consultant.*

.4 Include all components of the wall system, horizontal and vertical components, and, where applicable, the related composite aluminum panels.

.5 The accepted mock-up may be incorporated into the finished *Work*.

.6 Mock-up to be reviewed on site and signed off by the designing structural engineer to ensure conformance with shop drawing design.

.7 Notify the *Consultant* 72 hours before installation of the mock-up. Do not proceed with panel system work until the mock-up has been accepted.

.8 The accepted mock-up will be the standard of acceptance for the work of this section.

.6 Certification: Provide manufacturer's certification that the work results of this section meet or exceed specified requirements.

.7 Manufacturer's Qualification Statement.

.8 Installer's Qualification Statement.

1.07 QUALITY ASSURANCE

.1 Manufacturer Qualifications:

.1 The manufacturer shall have a minimum of five (5) years' documented successful experience in the production of insulated wall panels of types similar to those required for this *Project.*

.1 If requested by the *Consultant*, provide evidence of previously completed *Projects* of a similar nature.

.2 Installer Qualifications:

.1 The work of this section shall be installed by a company licensed by the *Product* manufacturer as an approved installer with a minimum of 5 years proven experience. The installer must have completed at least 5 major

insulated panel *Projects* of a similar nature to this *Project.*

.2 Employ only skilled tradespersons who are experienced in this work.

.3 If requested by the *Consultant,* provide evidence of previously completed *Projects.*

1.08 DELIVERY, STORAGE AND HANDLING

.1 Handle and store panels in accordance with the manufacturer's recommended guidelines and good construction practices to prevent permanent distortion and mechanical damage.

.2 Deliver panel materials and components in the manufacturer’s original, unopened, undamaged packaging with identification labels intact.

.3 Store panel materials on a dry, level, firm, and clean surface; stack no more than two bundles high; elevate one end of the stack to allow moisture run-off; cover and ventilate to allow air to circulate and moisture to escape.

1.09 WASTE MANAGEMENT AND DISPOSAL

.1 Cooperate with the waste management coordinator in the implementation of the waste management plan specified in Division 01, General and Supplementary conditions of the *Contract*.

.2 Handle and dispose of waste materials, including packaging materials, generated by the work of this section in accordance with the waste management plan.

1.10 WARRANTY

.1 In addition to the warranty period prescribed in Division 01, General and Supplementary conditions of the *Contract,* provide the following manufacturer's warranties

.1 Limited Warranty: Standard form in which manufacturer agrees to repair or replace items that fail in materials or workmanship within specified warranty period. The items covered by the warranty include structural performance including bond integrity, deflection and buckling.

.1 Warranty Period: Two (2) years from date of *Ready-For-Takeover*, or 2 years and 6 months from the date of shipment from manufacturer’s plant, whichever occurs first.

.2 Finish Warranty: Standard form in which manufacturer agrees to repair or replace metal panels that evidence deterioration of fluoropolymer finish, including flaking or peeling from approved primed metal substrate, chalk in excess of 8 when tested in accordance with ASTM D4214 , Method A, and /or colour fading in excess of 5 ΔE Hunter units on panels when tested in accordance with ASTM D2244.

.1 Warranty Period: Ten (10) years from date of *Ready-For-Takeover*, or 10 years and 3 months from the date of shipment from manufacturer’s plant, whichever occurs first.

.3 Provide as a breakout option - Weather Tightness Warranty: Submit a written warranty signed by the exterior wall panel system manufacturer and the Contractor that the exterior insulated metal wall system will be weathertight for a period of twenty (20) years. All Leaks occurring during this time will be repaired as part of the work of this section.

PART 2 PRODUCTS

2.01 MANUFACTURER

.1 This specification is based on insulated metal wall panels by Norbec TM Insulated Metal Panel Solutions.

.1 Contact: David Wandler - dwandler@norbec.com

.2 Requests for *Substitutions* will be considered in accordance with the provisions of Section 01 25 00 - Substitution Procedures. Acceptance of alternative *Products* is subject to the approval of the *Owner* and the *Consultant.*

.3 Obtain all insulated metal panel systems and their related components from a single manufacturer.

2.02 INSULATED METAL WALL PANELS

.1 Standard of acceptance: Norbec Norex- L - vertical applications as indicated.

.2 Panel thicknesses, widths, colours and textures as specified and as indicated on the *Drawings*.

.3 Performance Criteria:

.1 Structural Test: Structural performance shall be verifiable by witnessed structural testing for simulated wind loads in accordance with ASTM E72 and ASTM E330/E330M . Deflection criteria shall be L/180, or as required by manufacturer, whichever is more restrictive.

.2 Fatigue Test: There shall be no evidence of metal/insulation interface delamination when the panel is tested by simulated wind loads (positive and negative loads), when applied for two million alternate cycles of L/180 deflection.

.3 Freeze / Heat Cycling Test: Panels shall exhibit no delamination, surface blisters, permanent bowing or deformation when subjected to cyclic temperature extremes of minus 37.8 deg. C to plus 82 deg. C temperatures for twenty one, eight-hour cycles.

.4 Water Penetration: There shall be no uncontrolled water penetration through the panel joints at a pressure differential of 20 psf, when tested in accordance with ASTM E331.

.5 Dynamic Water Penetration: There shall be no uncontrolled water penetration through the panel assembly at a pressure difference of 12 psf, when tested in accordance with AAMA 501.1.

.6 Air Infiltration: Air infiltration through the panel shall not exceed 0.001 cfm/at 20 psf air pressure differential when tested in accordance with ASTM E283.

.7 Humidity Test: Panels shall exhibit no delamination or metal interface corrosion when subjected to plus 60 deg. C temperature and 100 percent relative humidity for a total of 1500 hours (62 days).

.8 Autoclave Test: Panels shall exhibit no delamination or shrinkage/melting of the foam core from the metal skins after being subjected in an autoclave to a pressure of 13.8 kPa at a temperature of plus 103 deg. C for a period of 2 1/2 hours.

.9 Seismic Performance: Comply with ASCE 7, Section 13, “Seismic Design Requirements for Non-Structural Components”. Panels shall be hard-

fastened to structure along one edge only such that lateral slippage between panels can occur in the event of seismic activity.

.10 Panel Fire Tests:
- .1 Fire Endurance Test – 10 minutes: Panels remained in place without joint stitch fastening per CAN/ULC S101.

.11 Flame Spread and Smoke Developed Tests on exposed Insulating Core:
- .1 Flame Spread: Less than 25.
- .2 Smoke Developed: Less than 100.
- .3 Tests performed in accordance with CAN/ULC S102 and ASTM E84.

.12 Fire Test Response Characteristics: Steel-faced panels with polyisocyanurate (ISO) core shall fully comply with Chapter 26 of International Building Code regarding the use of Foam Plastic.
- .1 FM 4880 : Class I rated per FM Global, panels are approved for use without a thermal barrier and do not create a requirement for automatic sprinkler protection.
- .2 NFPA 259 Potential Heat Content; established for foam core.
- .3 NFPA 268 Ignitability of Exterior Wall Assemblies Using a Radiant Heat Source; successfully passed acceptance criteria.
- .4 NFPA 285 Intermediate Scale Multi-story Fire Evaluation; successfully passed acceptance criteria.
- .5 UL 263 Fire Resistive Rating; classified as a component of a fire-rated wall assembly for 1-hour and 2-hour rating Design No. U053 (rated assemblies include appropriate layers of fire-rated Type X Gypsum board).
- .6 ASTM D1929 Minimum Flash and Self Ignition; established for foam core.
- .7 CAN/ULC S101, CAN/ULC S102, CAN/ULC S127, CAN/ULC S134 UL Canada fire test standards; successfully passed.

.13 Windborne Debris rating for Wall Panel:
- .1 Meet requirements for high velocity hurricane zone with large missile impact when tested in accordance with FM 4881 .

.14 Insulating Core: Polyisocyanurate (ISO) core, ASTM C591 Type IV, CFC and HCFC free, compliant with Montreal Protocol and Clean Air Act, with the following minimum physical properties:
- .1 Core is 88 percent closed cell when tested in accordance with ASTM D6226.
- .2 Panel shall provide a nominal R-value of 7.5 [hr·ft2·°F/Btu] per inch thickness when tested in accordance with ASTM C518 at 75°F mean temperature and 8.0 [hr·ft2·°F/Btu] per inch thickness when tested in accordance with ASTM C518 at 35°F mean temperature.
- .3 Foam shall have a density of 2.3 to 2.6 pounds per cubic foot when tested in accordance with ASTM D1622/D1622M.
- .4 Compressive Stress: Panels shall have a compressive stress of 23 psi. when tested according to ASTM D1621.
- .5 Shear Stress: 25 psi when tested in accordance with ASTM C273/C273M.

.6 Tensile Stress: 19 psi when tested in accordance with ASTM D1623.
.7 High Temperature Aging at 158 deg. F and 97% plus relative humidity for 28 days: less than 6 percent volume change:
.1 Tested according to ASTM D2126.
.8 Low Temperature Aging at -10 deg. F and ambient humidity at 28 days: less than 1 percent volume change
.1 Tested according to ASTM D2126.

2.03 EXTERIOR PAINT FINISH CHARACTERISTICS:

.1 Gloss: 15 ± 5 measured at 60 degree angle tested in accordance with ASTM D523.
.2 Pencil Hardness: HB-H minimum tested in accordance with ASTM D3363.
.3 Flexibility, T-Bend: 1-2T bend with no adhesion loss when tested in accordance with ASTM D4145.
.4 Flexibility, Mandrel: No cracking when bent 180° around a 3 mm mandrel as tested in accordance with ASTM D522/D522M.
.5 Adhesion: No adhesion loss tested in accordance with ASTM D3359.
.6 Reverse Impact: No cracking or adhesion loss when impacted 3000 by inches of metal thickness (lb-in), tested in accordance with ASTM D2794.
.7 Abrasion Resistance: Nominal 65 litres of falling sand to expose 4 mm diameter of metal substrate when tested in accordance with ASTM D968.
.8 Graffiti Resistance: Minimal effect and graffiti resistant finish.
.9 Acid Pollutant Resistance: No effect when subjected to 30 percent sulfuric acid for 18 hours, or 10 percent muriatic acid for 15 minutes when tested in accordance with ASTM D1308.
.10 Salt Fog Resistance: Passes 1000 hours, when tested in accordance with ASTM B117 (5 percent salt fog at 35 deg. C).
.11 Cyclic Salt Fog and UV Exposure: Passes 2016 hours when tested in accordance with ASTM D5894.
.12 Humidity Resistance: Passes 1500 hours at 100 percent relative humidity and 35 deg. C, with a test rating of 10 when tested in accordance with ASTM D2247 and ASTM D714.
.13 Colour Retention: Passes 5000 hours when tested in accordance with ASTM G153 and ASTM G154.
.14 Chalk Resistance: Maximum chalk is a rating of 8 when tested in accordance with ASTM D4214, Method A.
.15 Colour Tolerances: Maximum of 5ΔE Hunter units on panels when tested in accordance with ASTM D2244.

2.04 PANEL ASSEMBLY:

.1 Panel thickness: 76.2 mm (3 inches) or as indicated on the *Drawings*.
.2 Panel width: 1080 mm (42-1/2inches) or as indicated on the *Drawings*
.3 Panel Lengths: Minimum 2438 mm (8 feet), maximum 15.850 m (52 feet), as indicated on the *Drawings*.

.4 Panel Attachment: Fasteners and stainless steel attachment clips completely concealed within the panel side joint as recommended by the manufacturer.

.5 Joint reveals: 3 mm (1/8 inch).

2.05 EXTERIOR FACE OF PANEL:

.1 Material:

.1 Steel coil material to ASTM A653/A653M Z275, G90 Galvanized Steel

.2 Gauge: 0.46 mm (26 ga)

.1 Heavier gauges if required based on panel span and structural requirements.

.2 Manufacturer of IMP must review at time of bidding, and tender as required to meet structural and wind loading requirements of the applicable building codes and requirements of all authorities having jurisdiction.

.2 Profile: Micro-ribbed

.3 Texture: Embossed

.4 Exterior Paint Finish Colour

.1 Refer to *Drawings* for colour selections.

.5 Finish System:

.1 2 coat fluoropolymer (PVDF) Coating:

.1 Manufacturer's standard 2 coat, thermo-cured system consisting of specially formulated inhibitive primer and colour topcoat

.2 The exposed surface shall have a minimum topcoat dry film thickness of 18 microns (0.7 mils) and 5 microns (0.2 mils) primer.

.3 The unexposed (reverse) side shall have a dry film thickness which will vary in accordance with *Owner's* requirements. To be determined in consultation with manufacturer.

2.06 INTERIOR FACE OF PANEL:

.1 Material:

.1 Steel coil material to ASTM A653/A653M Z275, G90 Galvanized Steel

.2 Profile: Shadowline.

.1 Profile description: Linear striations

.3 Texture: Embossed.

.4 Gauge: 0.46 mm (26 ga) or heavier if required by panel span and structural requirements.

.5 Interior Finish: As selected by Consultant from manufacturer's full product range

.1 Colour: USDA Imperial White unless otherwise indicated on the *Drawings.*

2.07 ACCESSORIES

.1 Fasteners:

.1 Self drilling fasteners, corrosion resistant plated steel as recommended by the manufacturer.

.2 Hex-head type with steel and neoprene washer and 2.66 mm (12 ga) stainless steel clip supplied by the manufacturer.

.1 Size: As recommended by the manufacturer.

.2 Perimeter Trim:

.1 Fabricated perimeter trim and metal flashing shall be same gauge: 0.76 mm thick (22 ga) minimum. Material and coating colour to match exterior face of panel.

.2 Extruded perimeter trim: Extruded aluminum 6063-T5 alloy with spray applied PVF coating to match exterior face of insulated metal wall panel.

.3 Sealants: Butyl, non-skinning/curing type as recommended and supplied by the manufacturer.

.4 Butyl Tape: As recommended and supplied by the manufacturer.

PART 3 EXECUTION

3.01 EXAMINATION

.1 Examine areas and conditions under which work is to be performed and notify the *Contractor* in writing of conditions detrimental to the proper and timely completion of the *Work.*

.2 Take field measurements as required to achieve a proper fit of the insulated wall panel envelope.

.1 Provide measurements in a timely manner so that there is no impact on the construction or manufacturing schedule.

.3 Review and coordinate with the *Drawings, Structural and Architectural Drawings,* and steel contractor to ensure supply and installation of the necessary supporting structure to receive the insulated metal panel systems.

.4 Insulated metal panel (IMP) system *Supplier* and manufacturer to confirm IMP system and back up support system account for IMP and subsequent cladding system designs. Steel stud, structural steel, IMP and metal cladding *Suppliers* are responsible to coordinate their individual requirements with each other to ensure that adequate structural support is provided for their respective systems. Each of the *Suppliers* are required to review and coordinate with the adjacent systems.

.5 Verify that the walls are square, and support members to which panels are attached are in the same plane (not lapped or nested), flat and free of obstructions such as weld marks, bolts or screw heads. Support members must be installed within the following tolerances:

.1 Plus or minus 3 mm in 1500 mm in any direction along the plane of the framing.

.2 Plus or minus 6 mm cumulative in 6 m in any direction along the plane of the framing.

.3 Plus or minus 12 mm from the framing plane on any elevation.

.6 Verify that bearing support has been provided behind horizontal joints of vertical panel systems and that the width of the support is as recommended by the panel manufacturer.

.7 Examine individual panels upon removing from the bundle and notify the manufacturer of panel defects. Do not install defective panels.

.8 Verify that site conditions are acceptable and are ready to receive the *Work*.

.9 Do not proceed with the *Work* until unsatisfactory conditions have been corrected to the satisfaction of the installer.

.10 Commencement of the installation will be construed as acceptance of the site conditions and, thereafter, the *Contractor* shall be fully responsible for satisfactory *Work* as specified herein.

3.02 PANEL INSTALLATION

.1 Install the panel systems in accordance with manufacturer's installation recommendations and the reviewed and accepted *Shop Drawings.* Refer to architectural details for additional sealant lines and measures to ensure the continuity of the air and vapour barrier.

.2 Install panels plumb, level, and true-to-line, to the dimensions and layout indicated on the reviewed and accepted *Shop Drawings.*

.3 Cut panels prior to installing, where indicated on the *Shop Drawings* or where required by site conditions and accepted in writing by the *Consultant,* using a power circular saw with fine tooth carbide tip blade in accordance with the manufacturer's instructions. Require personnel to wear respiratory and eye protection devices.

.4 Butyl Weather Barrier Sealant:

.1 Apply non-skinning butyl sealant as shown on the *Shop Drawings* and the manufacturer's installation instructions as necessary to ensure the integrity of the vapour barrier. Refer to architectural details for additional sealant lines and vapour barrier.

.2 Use the manufacturer's recommended non-skinning butyl tube sealant for tight metal-to-metal contact.

.3 Do not use non-skinning butyl tube sealant to bridge gaps.

.4 Provide double line of sealant at all panel joints and intersections.

.5 Secure panels to the structural supports:

.1 Install panel fasteners through the pre-punched holes in the attachment clips, concealed within the panel joints.

.2 Space clips as recommended by the manufacturer or otherwise indicated on the reviewed and accepted *Shop Drawings*.

.3 Verify clip and fastener alignment.

.4 Follow the manufacturer's panel load/span analysis for panel spans and fastening patterns.

.6 Do not place base of panels directly onto the membrane at base locations. Install metal flashing over the membrane.

.7 Install all neoprene sponge and santoprene gaskets in accordance with the manufacturer's recommendations.

.8 Exposed fasteners at exterior to have a coloured finish to match the panel.

.9 Exposed IMP anchoring screws on interior to be cut back to 3/8" and capped to ensure no exposed sharp edges.

3.03 TRIM INSTALLATION

.1 Place trim and trim fasteners as indicated on the reviewed and accepted *Shop Drawings.*

.2 Field drill weep holes where appropriate in horizontal trim, where indicated on *Shop Drawings*; minimum 6 mm diameter at 600 mm on centre.

.3 Place a continuous strip of butyl tape or butyl tube sealant between the inside back face of closure trims and interior panel faces for the length of the panel to be covered as indicated on the *Shop Drawings*, for proper vapour seal.

3.04 SEALANT INSTALLATION FOR EXPOSED JOINTS

.1 Clean and prime surfaces to receive exterior exposed sealants in accordance with the sealant manufacturer's recommendations.

.2 Follow the sealant manufacturer's recommendations for joint width-to-depth ratio, application temperature range, size and type of backer rod, and compatibility of materials for adhesion.

.3 Do not permit direct contact between butyl and silicone sealants.

3.05 FIELD QUALITY CONTROL

.1 Field Water Test: After completing a portion of the metal wall panel assembly, including accessories and trim, test a 2-bay area selected by the *Consultant* for water penetration in accordance with AAMA 501.2.

3.06 CLEANING AND PROTECTION

.1 Remove protective film immediately after installation.

.2 Remove from the premises all surplus material, dirt and debris caused by the work of this section.

.3 Clean any drippage and spills of surplus sealant from adjacent surfaces.

.4 Touch-up, repair or replace metal panels and trim that have been damaged.

.5 After metal wall panel installation, clear weep holes and drainage channels of obstructions, dirt, and sealant.

.6 Make good damage to other work caused by the work of this section.

END OF SECTION 07 42 13

This page intentionally left blank

SECTION 07 42 15
INSULATED METAL WALL PANELS - MINERAL WOOL CORE *

PART 1 GENERAL

1.01 RELATED DOCUMENTS

.1 *Drawings* and general provisions of the *Contract,* including General and Supplementary Conditions and Division 01 *Specifications* sections, apply to this Section.

1.02 SUMMARY OF WORK

.1 Work Included:

.1 The work of this Section includes the provision of all labour, materials, equipment, and *Services* required to fabricate and install insulated metal wall panel systems, as indicated on the *Drawings*, as specified herein, and as required for a complete *Project.*

.2 The work includes steel faced, mineral wool core fire resistive metal wall panels with side lap seals, complete with fasteners and perimeter trims/extrusions/flashings; sealants/gaskets between metal components.

.1 Vertical panels with exposed exterior finished faces.

.3 For insulated metal wall panel systems with polyisocyanurate core, Refer to Section 07 42 13 - Insulated Metal Wall Panels - Standard Core *

1.03 RELATED REQUIREMENTS

.1 Structural Steel Framing: Refer to Structural *Drawings*.

.2 Section 07 42 13 - Insulated Metal Wall Panels - Standard Core *

.3 Section 07 62 00 - Sheet Metal Flashing and Trim .

.4 Section 07 84 01 - Firestopping.

.5 Section 07 92 00 - Joint Sealants Sealing joints between metal wall panel system and adjacent construction.

.6 Section 08 44 13 - Glazed Aluminum Curtain Walls.

1.04 REFERENCES

.1 AAMA 501: Test Method for Exterior Walls.

.2 AAMA 501.2 - Quality Assurance and Diagnostic Water Leakage Field Check of Installed Storefronts, Curtain Walls, and Sloped Glazing Systems 2015.

.3 ASTM A755/A755M - Standard Specification for Steel Sheet, Metallic Coated by the Hot-Dip Process and Prepainted by the Coil-Coating Process for Exterior Exposed Building Products 2018.

.4 ASTM A792/A792M - Standard Specification for Steel Sheet, 55% Aluminum-Zinc Alloy-Coated by the Hot-Dip Process 2021a.

.5 ASTM B117 - Standard Practice for Operating Salt Spray (Fog) Apparatus 2019.

.6 ASTM C165 - Standard Test Method for Measuring Compressive Properties of Thermal Insulations 2007 (Reapproved 2017).

.7 ASTM C303 - Standard Test Method for Dimensions and Density of Preformed Block and Board–Type Thermal Insulation 2021.

.8 ASTM C518 - Standard Test Method for Steady-State Thermal Transmission Properties by Means of the Heat Flow Meter Apparatus 2021.

.9 ASTM C612 - Standard Specification for Mineral Fiber Block and Board Thermal Insulation 2014 (Reapproved 2019).

.10 ASTM D522/D522M - Standard Test Methods for Mandrel Bend Test of Attached Organic Coatings 2017 (Reapproved 2021).

.11 ASTM D523 - Standard Test Method for Specular Gloss 2014 (Reapproved 2018).

.12 ASTM D714 - Standard Test Method for Evaluating Degree of Blistering of Paints 2002 (Reapproved 2017).

.13 ASTM D968 - Standard Test Methods for Abrasion Resistance of Organic Coatings by Falling Abrasive 2022.

.14 ASTM D1308 - Standard Test Method for Effect of Household Chemicals on Clear and Pigmented Organic Finishes 2020.

.15 ASTM D1623 - Standard Test Method for Tensile And Tensile Adhesion Properties of Rigid Cellular Plastics 2017.

.16 ASTM D2244 - Standard Practice for Calculation of Color Tolerances and Color Differences from Instrumentally Measured Color Coordinates 2021.

.17 ASTM D2247 - Standard Practice for Testing Water Resistance of Coatings in 100% Relative Humidity 2015 (Reapproved 2020).

.18 ASTM D2794 - Test Method for Resistance of Organic Coatings to the Effects of Rapid Deformation (Impact) 1993 (Reapproved 2019).

.19 ASTM D3359 - Standard Test Method for Rating Adhesion by Tape Test 2022.

.20 ASTM D3363 - Standard Test Method for Film Hardness by Pencil Test 2022.

.21 ASTM D4145 - Standard Test Method for Coating Flexibility of Prepainted Sheet 2010 (Reapproved 2018).

.22 ASTM D4214 - Standard Test Methods for Evaluating the Degree of Chalking of Exterior Paint Films 2007 (Reapproved 2015).

.23 ASTM D5894 - Standard Practice for Cyclic Salt Fog/UV Exposure of Painted Metal, (Alternating Exposures in a Fog/Dry Cabinet and a UV/Condensation Cabinet) 2016.

.24 ASTM E72 - Standard Test Methods of Conducting Strength Tests of Panels for Building Construction 2015.

.25 ASTM E84 - Standard Test Method for Surface Burning Characteristics of Building Materials 2022.

.26 ASTM E119 - Standard Test Methods for Fire Tests of Building Construction and Materials 2020.

.27 ASTM E136 - Standard Test Method for Assessing Combustibility of Materials Using a Vertical Tube Furnace at 750 Degrees C 2019a.

.28 ASTM E283 - Standard Test Method for Determining the Rate of Air Leakage Through Exterior Windows, Curtain Walls, and Doors Under Specified Pressure Differences Across the Specimen 2004 (Reapproved 2012).

.29 ASTM E330/E330M - Standard Test Method for Structural Performance of Exterior Windows, Doors, Skylights and Curtain Walls by Uniform Static Air

Pressure Difference 2014 (Reapproved 2021).

.30 ASTM E331 - Standard Test Method for Water Penetration of Exterior Windows, Skylights, Doors, and Curtain Walls by Uniform Static Air Pressure Difference 2000 (Reapproved 2016).

.31 ASTM E814 - Standard Test Method for Fire Tests of Penetration Firestop Systems 2013a (Reapproved 2017).

.32 ASTM G153 - Standard Practice for Operating Enclosed Carbon Arc Light Apparatus for Exposure of Nonmetallic Materials 2013 (Reapproved 2021).

.33 ASTM G154 - Standard Practice for Operating Fluorescent Ultraviolet (UV) Lamp Apparatus for Exposure of Nonmetallic Materials 2016.

.34 CAN/ULC S101 - Standard Methods of Fire Endurance Tests of Building Construction and Materials 2014.

.35 CAN/ULC S102 - Method of Testing for Surface Burning Characteristics of Building Materials and Assemblies 2018.

.36 CAN/ULC S114 - Test for Determination of Non Combustibility in Building Materials 2018.

.37 CAN/ULC S115 - Standard Method of Fire Tests of Firestop Systems 2018.

.38 UL 1479 - Standard for Fire Tests of Penetration Firestops Current Edition, Including All Revisions.

1.05 ADMINISTRATIVE REQUIREMENTS

.1 Pre-installation meeting:

- .1 Conduct a pre-installation meeting at the job site attended by the *Owner*, *Contractor,* the IMP contractor, *Consultant,* manufacturer's technical representative, installer, and other contractor*s* whose work affects or is affected by the work of this section.
- .2 The agenda to include:
  - .1 Structural support requirements for the insulated wall panels.
  - .2 Details of construction and interface between the insulated wall panel system and adjacent construction.
  - .3 Other requirements specific to the *Project.*

1.06 SUBMITTALS

.1 Refer to Division 01, General & Supplementary conditions of the *Contract* for submittal procedures.

.2 *Product* Data: Submit the manufacturer's current technical literature for each type of *Product.*

.3 *Shop Drawings:*

- .1 To be provided by Kingspan-approved insulated metal panel *Contractor*.
- .2 *Shop Drawings* producer to allow for time to review with manufacturer and to ensure to incorporate manufacturer's recommendations.
- .3 Submit *Shop Drawings* for each type of panel system and each wall assembly. Include the following:
  - .1 Profile.
  - .2 Gauge, both interior and exterior sheet.

.3 Location, layout, dimensions and thickness of panels.
.4 Location and type of fasteners.
.5 Profiles and method of attachment of trim.
.6 Details at panel ends and joints, complete with location and types of accessories.
.7 Locations and type of sealants.
.8 Installation sequence.
.9 Coordination *Drawings:* Elevation *Drawings* and building sections showing panels in relationship to required locations for structural support.
.1 Include panel details, fastening and anchoring details, and attachments to structural support.
.10 Other details as required to ensure a weathertight installation.
.11 Distinguish between factory and field-assembled work.

.4 The panel system, including all related connections and fastenings, shall be designed by a structural engineer licensed to practise in the Province of the *Project*; and who is experienced in providing engineering *Services* of the kind indicated. Each of the *Shop Drawings* submitted shall bear the stamp and signature of the aforesaid structural engineer,

.5 Panel Analysis:
.1 Provide panel calculations to verify panels will withstand the design loads indicated, including wind loads, without detrimental effects or deflection exceeding L/240, or as required by manufacturer, whichever is more stringent.
.2 The design load / deflection criteria and fastening pattern shall be verified from witnessed / audited tests using the "Chamber Method" in accordance with ASTM E72
.3 Include effects of thermal differential between the exterior and interior panel facings and resistance to fastener pullout.

.4 Samples:
.1 Provide a 150 mm x 150 mm sample of each colour and texture indicated.
.2 Provide a sample panel section, full width by 300 mm long, showing panel joints, profile and finish.

.5 Mock-Up
.1 Construct a minimum 2-panel wide, full height mock-up panel installation.
.2 Coordinate with Section 08 44 13 - Glazed Aluminum Curtain Walls and include the curtain wall mock-up to illustrate the joint between the curtain wall assembly and the wall panel assembly.
.3 Locate where directed by the *Consultant.*
.4 Include all components of the wall system, horizontal and vertical components, and, where applicable, the related composite aluminum panels.
.5 Mock-up to be reviewed on site and signed off by the designing structural engineer to ensure conformance with shop drawing design.
.6 The accepted mock-up may be incorporated into the finished *Work*.
.7 Notify the *Consultant* 72 hours before installation of the mock-up. Do not proceed with panel system work until the mock-up has been accepted.

.8 The accepted mock-up will be the standard of acceptance for the work of this section.

.6 Certification: Provide manufacturer's certification that the work results of this section meet or exceed specified requirements.

.7 Manufacturer's Qualification Statement.

.8 Installer's Qualification Statement.

.9 Quality Assurance Submittals

.1 Design Data, Test Reports: Provide manufacturer test reports indicating product compliance with requirements.

.2 Manufacturer Erection Instructions: Provide manufacturer’s written installation instructions including proper material storage, material handling, installation sequence, panel location(s), and attachment methods, details and required trim and accessories.

1.07 QUALITY ASSURANCE

.1 Manufacturer Qualifications:

.1 The manufacturer shall have a minimum of five (5) years’ documented successful experience in the production of insulated wall panels of types similar to those required for this *Project.*

.1 If requested by the *Consultant*, provide evidence of previously completed *Projects* of a similar nature.

.2 Installer Qualifications:

.1 The work of this section shall be installed by a company licensed by the *Product* manufacturer as an approved installer with a minimum of 5 years proven experience. The installer must have completed at least 5 major insulated panel *Projects* of a similar nature to this *Project.*

.2 Employ only skilled tradespersons who are experienced in this work.

.3 If requested by the *Consultant,* provide evidence of previously completed *Projects.*

1.08 DELIVERY, STORAGE AND HANDLING

.1 Handle and store panels in accordance with the manufacturer's recommended guidelines and good construction practices to prevent permanent distortion and mechanical damage.

.2 Deliver panel materials and components in the manufacturer’s original, unopened, undamaged packaging with identification labels intact.

.3 Store panel materials on a dry, level, firm, and clean surface; stack no more than two bundles high; elevate one end of the stack to allow moisture run-off; cover and ventilate to allow air to circulate and moisture to escape.

.4 Mineral wool core shall be protected from moist air, rain and UV during construction. Stored panels must be wrapped in plastic or tarpaulins. Protect exposed mineral fiber from rain or water with plastic sheet during installation.

1.09 WASTE MANAGEMENT AND DISPOSAL

.1 Cooperate with the waste management coordinator in the implementation of the waste management plan specified in Division 01, General and Supplementary

conditions of the *Contract*.

.2 Handle and dispose of waste materials, including packaging materials, generated by the work of this section in accordance with the waste management plan.

1.10 WARRANTY

.1 In addition to the warranty prescribed in the Division 01, General and Supplementary conditions of the *Contract,* provide the following manufacturer's warranties:

.1 Limited Warranty: Standard form in which manufacturer agrees to repair or replace items that fail in materials or workmanship within specified warranty period. The items covered by the warranty include structural performance including bond integrity, deflection and buckling.

.1 Warranty Period: Two (2) years from date of *Ready-For-Takeover*, or 2 years and 6 months from the date of shipment from manufacturer's plant, whichever occurs first.

.2 Finish Warranty: Standard form in which manufacturer agrees to repair or replace metal panels that evidence deterioration of fluoropolymer finish, including flaking or peeling from approved primed metal substrate, chalk in excess of 8 when tested in accordance with ASTM D4214, Method A, and /or colour fading in excess of 5 ΔE Hunter units on panels when tested in accordance with ASTM D2244.

.1 Warranty Period: Twenty (20) years from date of *Ready-For-Takeover*, or 20 years and 6 months from the date of shipment from manufacturer's plant, whichever occurs first.

PART 2 PRODUCTS

2.01 MANUFACTURER

.1 This specification is based on insulated metal wall panels by Norbec TM insulated metal panel solutions.

.1 Contact: David Wandler, dwandler@norbec.com

.2 Requests for *Substitutions* will be considered in accordance with the provisions of Division 01 - General Requirements. Acceptance of alternative *Products* is subject to the approval of the *Owner* and the *Consultant.*

.3 Obtain all insulated metal panel systems and their related components from a single manufacturer.

2.02 INSULATED METAL WALL PANELS

.1 Standard of acceptance: Norbec Noroc panel with minerl fiber core, vertical applications as indicated.

.2 Panel thicknesses, widths, colours and textures as specified and as indicated on the *Drawings*.

.3 Performance Criteria:

.1 Structural Test: Structural performance shall be verifiable by witnessed structural testing for simulated wind loads in accordance with ASTM E72 and ASTM E330/E330M. Deflection criteria shall be L/180

.2 Structural Test: Structural performance shall be verifiable by witnessed structural testing for simulated wind loads in accordance with ASTM E72. Deflection criteria shall be L/240 or as required by manufacturer, whichever is more stringent.

.3 Thermal Properties: The panel shall provide an R-value of 4.0 per inch thickness when tested in accordance with ASTM C518.

.4 Adhesion Test: Tensile strength in accordance with ASTM D1623 .

.5 Penetration and Firestop Test: The finished panel with 4 inches and 6 inches thick mineral wool core and steel skins with through penetration firestop systems meet requirements of 1 hour and 2 hour fire resistance performance in accordance with ASTM E814 and UL 1479.

.6 Penetration and Firestop Test: The finished panel with 4 inches and 6 inches thick mineral wool core and steel skins with maximum 6" diameter through penetration firestop systems meet requirements of 1 hour and 2 hour fire resistance performance in accordance with ASTM E814 and UL 1479.

.7 Water Penetration: There shall be no uncontrolled water penetration through the panel joints at a pressure differential of 20 psf, when tested in accordance with ASTM E331.

.8 Air Infiltration: Air infiltration through the panel shall not exceed 0.01 cfm/at 6.24 psf air pressure differential when tested in accordance with ASTM E283.

.9 Fire Test Response Characteristics: Steel-faced panels with mineral wool core shall fully comply with Chapter 7 of International Building Code regarding fire-resistance-rated construction. The following approval listings/test reports shall be available upon request for submission to the Authority Having Jurisdiction.

.1 ASTM E119: Panels shall have successfully passed the requirements of this standard.

.2 CAN/ULC S101: Panels shall have successfully passed the requirements of this standard.

.3 CAN/ULC S115: Panel penetrations shall have successfully passed the requirements of this standard.

.10 Insulating Core:

.1 Density: 8.5 lb. /cu. ft. +/- 10% or minimum 7.65 lb. /cu. ft., maximum 9.4 lb. / cu. ft.; in accordance with ASTM C303 .

.2 Combustibility: Non-combustible at 1382º F in accordance with ASTM E136.

.3 Combustibility: Non-combustible when tested in accordance withCAN/ULC S114.

.4 Apparent thermal conductivity of mineral fiber core: Maximum “k” factor at 75º F. mean temp. -0.25 Btu in/h ft2 ºF (R=4.0 ft2 ºF h / Btu inch thickness) in accordance with ASTM C518 .

.5 Compressive Strength: Force applied parallel to fiber orientation (cut lamella pieces) Maximum 10% deformation at 9.2 KN of force in accordance with ASTM C165.

.6 Dimensional stability: Linear shrinkage 2% max. at 1200º F in accordance with ASTM C612.

.7 Moisture resistance: Water vapor absorption - 5% max. by weight in accordance with ASTM C612.
.8 Odor emission: No objectionable odor in accordance with ASTM C612 .
.9 Surface burning characteristics when tested in accordance with CAN/ULC S102:
.1 Flame Spread: < 25
.2 Smoke Developed: <45

2.03 EXTERIOR PAINT FINISH CHARACTERISTICS:

.1 Gloss: 15 ± 5 measured at 60 degree angle tested in accordance with ASTM D523 .
.2 Pencil Hardness: HB-H minimum tested in accordance with ASTM D3363 .
.3 Flexibility, T-Bend: 1-2T bend with no adhesion loss when tested in accordance with ASTM D4145 .
.4 Flexibility, Mandrel: No cracking when bent 180° around a 3 mm mandrel as tested in accordance with ASTM D522/D522M.
.5 Adhesion: No adhesion loss tested in accordance with ASTM D3359.
.6 Reverse Impact: No cracking or adhesion loss when impacted 3000 by inches of metal thickness (lb-in), tested in accordance with ASTM D2794.
.7 Abrasion Resistance: Nominal 65 litres of falling sand to expose 4 mm diameter of metal substrate when tested in accordance with ASTM D968.
.8 Graffiti Resistance: Minimal effect and graffiti resistant finish.
.9 Acid Pollutant Resistance: No effect when subjected to 30 percent sulfuric acid for 18 hours, or 10 percent muriatic acid for 15 minutes when tested in accordance with ASTM D1308.
.10 Salt Fog Resistance: Passes 1000 hours, when tested in accordance with ASTM B117 (5 percent salt fog at 35 deg. C).
.11 Cyclic Salt Fog and UV Exposure: Passes 2016 hours when tested in accordance with ASTM D5894 .
.12 Humidity Resistance: Passes 1500 hours at 100 percent relative humidity and 35 deg. C, with a test rating of 10 when tested in accordance with ASTM D2247 and ASTM D714.
.13 Colour Retention: Passes 5000 hours when tested in accordance with ASTM G153 and ASTM G154.
.14 Chalk Resistance: Maximum chalk is a rating of 8 when tested in accordance with ASTM D4214 , Method A.
.15 Colour Tolerances: Maximum of 5ΔE Hunter units on panels when tested in accordance with ASTM D2244.

2.04 PANEL ASSEMBLY:

.1 Panel thickness: As indicated on the *Drawings*.
.2 Panel width: 1080 mm (42-1/2 inches).
.3 Panel Lengths: Minimum 2438 mm (8 feet), maximum 12.192 m (40 feet), as indicated on the *Drawings*.

.4 Fire Rating: As indicated on the *Drawings.*

.5 Panel Attachment: Fasteners and stainless steel attachment clips completely concealed within the panel side joint as recommended by the manufacturer.

.6 Panel Joint: Tongue and groove interlock joint.

.7 Joint reveals: 3 mm (1/8 inch).

2.05 EXTERIOR FACE OF PANEL:

.1 Material:

.1 Steel coil material to ASTM A653/A653M Z275, G90 Galvanized Steel

.2 Gauge: 0.46 mm (26 ga)

.1 Heavier gauges if required based on panel span and structural requirements.

.2 Manufacturer of IMP must review at time of bidding, and tender as required to meet structural and wind loading requirements of the applicable building codes and requirements of all authorities having jurisdiction.

.2 Profile: Micro-ribbed

.3 Texture: Embossed

.4 Exterior Paint Finish Colour:

.1 Refer to *Drawings* for colour selections.

.5 Finish System:

.1 2 coat fluoropolymer (PVDF) Coating:

.1 Manufacturer's standard 2 coat, thermo-cured system consisting of specially formulated inhibitive primer and colour topcoat

.2 The exposed surface shall have a minimum topcoat dry film thickness of 18 microns (0.7 mils) and 5 microns (0.2 mils) primer.

.3 The unexposed (reverse) side shall have a dry film thickness which will vary in accordance with Owner's requirements. To be determined in consultation with manufacturer.

2.06 INTERIOR FACE OF PANEL:

.1 Material:

.1 Steel coil material to ASTM A653/A653M Z275, G90 Galvanized Steel

.2 Profile: Shadowline.

.1 Profile description: Linear striations

.3 Texture: Embossed

.4 Gauge: 0.46 mm (26 ga) or heavier if required by panel span and structural requirements.

.5 Interior Finish: As selected by Consultant from manufacturer's full product range

.1 Colour: USDA Imperial White unless otherwise indicated on the *Drawings.*

2.07 INSULATING CORE:

.1 Rigid mineral wool insulation board, bonded with a thermal setting resin in accordance with ASTM C612.

2.08 ACCESSORIES

.1 Fasteners:

.1 Hidden fasteners with clips applied from the exterior and concealed in the panel side joint connecting both metal faces to supporting steel structure.

.2 Hex-head type with steel and neoprene washer and 2.66 mm (12 ga) stainless steel clip supplied by the manufacturer.

.3 Size: As recommended by manufacturer.

.2 Perimeter Trim:

.1 Fabricated perimeter trim and metal flashing shall be: 0.76 mm thick (22 ga) minimum. Material, coating, and colour to match exterior face of panel.

.3 Sealants: Butyl, non-skinning/curing type as recommended and supplied by the manufacturer.

.4 Butyl Tape: As recommended and supplied by the manufacturer.

PART 3 EXECUTION

3.01 EXAMINATION

.1 Examine areas and conditions under which work is to be performed and notify the *Contractor* in writing of conditions detrimental to the proper and timely completion of the *Work.*

.2 Take field measurements as required to achieve a proper fit of the insulated wall panel envelope.

.1 Provide measurements in a timely manner so that there is no impact on the construction or manufacturing schedule.

.3 Review and coordinate with the *Drawings*, Architectural and Structural Drawings, and structural steel *contractor* to ensure supply and installation installation of the necessary supporting structure to receive the insulated metal panel systems.

.4 Insulated metal panel (IMP) system *Supplier* and manufacturer to confirm IMP system and back up support system accounts for IMP system designs. Steel stud, structural steel and IMP *Suppliers* are responsible to coordinate their individual requirements with each other to ensure that adequate structural support is provided for the IMP system. Each of the *Suppliers* are required to review and coordinate with the adjacent systems.

.5 Verify that the walls are square, and support members to which panels are attached are in the same plane (not lapped or nested), flat and free of obstructions such as weld marks, bolts or screw heads. Support members must be installed within the following tolerances:

.1 Plus or minus 3 mm in 1500 mm in any direction along the plane of the framing.

.2 Plus or minus 6 mm cumulative in 6 m in any direction along the plane of the framing.

.3 Plus or minus 12 mm from the framing plane on any elevation.

.6 Verify that bearing support has been provided behind vertical joints of horizontal panel systems and horizontal joints of vertical panel systems and that the width of the support is as recommended by the panel manufacturer.

.7 Examine individual panels upon removing from the bundle and notify the manufacturer of panel defects. Do not install defective panels.

.8 Verify that site conditions are acceptable and are ready to receive the *Work*.

.9 Do not proceed with the *Work* until unsatisfactory conditions have been corrected to the satisfaction of the installer.

.10 Commencement of the installation will be construed as acceptance of the site conditions and, thereafter, the *Contractor* shall be fully responsible for satisfactory *Work* as specified herein.

3.02 PANEL INSTALLATION

.1 Install the panel systems in accordance with manufacturer's installation recommendations and the reviewed and accepted *Shop Drawings.* Refer to architectural details for additional sealant lines and measures to ensure the continuity of the air and vapour barrier.

.2 Install panels plumb, level, and true-to-line, to the dimensions and layout indicated on the reviewed and accepted *Shop Drawings.*

.3 Cut panels prior to installing, where indicated on the *Shop Drawings* or where required by site conditions and accepted in writing by the *Consultant,* using a power circular saw with fine tooth carbide tip blade in accordance with the manufacturer's instructions. Require personnel to wear respiratory and eye protection devices.

.4 Butyl Weather Barrier Sealant:

- .1 Apply non-skinning butyl sealant as shown on the *Shop Drawings* and the manufacturer's installation instructions as necessary to ensure the integrity of the vapour barrier. Refer to architectural details for additional sealant lines and vapour barrier.
- .2 Use the manufacturer's recommended non-skinning butyl tube sealant for tight metal-to-metal contact.
- .3 Do not use non-skinning butyl tube sealant to bridge gaps.
- .4 Provide double line of sealant at all panel joints and intersections.

.5 Secure panels to the structural supports:

- .1 Install panel fasteners through the pre-punched holes in the attachment clips, concealed within the panel joints.
- .2 Space clips as recommended by the manufacturer or otherwise indicated on the reviewed and accepted *Shop Drawings*.
- .3 Verify clip and fastener alignment.
- .4 Follow the manufacturer's panel load/span analysis for panel spans and fastening patterns.
- .5 Adjacent panels shall be mechanically interlocked at their longitudinal edges with the roll-formed tonged and groove profile.
- .6 Install vertical panels from one end of the wall to the other end. Place the female panel end in base, fasten to structural supports.

.6 Do not place base of panels directly onto the membrane at base locations. Install metal flashing over the membrane.

.7 Install all neoprene sponge and santoprene gaskets in accordance with the manufacturer's recommendations.

.8 Exposed fasteners on exterior to have a coloured to finish to match the panel.

.9 Exposed IMP anchoring screws on interior to be cut back to 3/8" and capped to ensure no exposed sharp edges.

3.03 TRIM INSTALLATION

.1 Place trim and trim fasteners as indicated on the reviewed and accepted *Shop Drawings.*

.2 Field drill weep holes where appropriate in horizontal trim, where indicated on *Shop Drawings*; minimum 6 mm diameter at 600 mm on centre.

.3 Place a continuous strip of butyl tape or butyl tube sealant between the inside back face of closure trims and interior panel faces for the length of the panel to be covered as indicated on the *Shop Drawings*, for proper vapour seal.

3.04 SEALANT INSTALLATION FOR EXPOSED JOINTS

.1 Clean and prime surfaces to receive exterior exposed sealants in accordance with the sealant manufacturer’s recommendations.

.2 Follow the sealant manufacturer’s recommendations for joint width-to-depth ratio, application temperature range, size and type of backer rod, and compatibility of materials for adhesion.

.3 Do not permit direct contact between butyl and silicone sealants.

3.05 FIELD QUALITY CONTROL

.1 Field Water Test: After completing a portion of the metal wall panel assembly, including accessories and trim, test a 2-bay area selected by the *Consultant* for water penetration in accordance with AAMA 501.2.

3.06 CLEANING AND PROTECTION

.1 Remove protective film immediately after installation.

.2 Remove from the premises all surplus material, dirt and debris caused by the work of this section.

.3 Clean any drippage and spills of surplus sealant from adjacent surfaces.

.4 Touch-up, repair or replace metal panels and trim that have been damaged.

.5 After metal wall panel installation, clear weep holes and drainage channels of obstructions, dirt, and sealant.

.6 Make good damage to other work caused by the work of this section.

END OF SECTION 07 42 15

SECTION 07 42 43
ALUMINUM COMPOSITE MATERIAL WALL PANELS

PART 1 GENERAL

1.01 RELATED DOCUMENTS

.1 *Drawings* and general provisions of the *Contract,* including General and Supplementary Conditions and Division 01 *Specifications* sections, apply to this Section.

1.02 SUMMARY OF WORK

.1 Work Included: The *Work* of this Section includes the provision of all labour, materials, equipment and *Services* required to engineer, fabricate and install composite aluminum wall panel systems, as indicated on the *Drawings*, as specified herein and as required for a complete *Project*.

.2 The *Work* includes:

.1 Aluminum composite material (ACM) canopy panels
.2 Secondary supports, and anchors to structure.
.3 Matching flashing and trim.

1.03 RELATED REQUIREMENTS

.1 Section 06 10 00 - Rough Carpentry: Provide blocking for all canopies
.2 Section 07 42 13 - Insulated Metal Wall Panels - Standard Core *.
.3 Section 07 42 15 - Insulated Metal Wall Panels - Mineral Wool Core *
.4 Section 07 62 00 - Sheet Metal Flashing and Trim: Metal flashing components integrated with this wall system.
.5 Section 07 92 00 - Joint Sealants: Sealing joints between siding and adjacent construction and fixtures.

1.04 REFERENCES

.1 ASHRAE Std 90.1 I-P - Energy Standard for Buildings Except Low-Rise Residential Buildings Most Recent Edition Adopted by Authority Having Jurisdiction, Including All Applicable Amendments and Supplements.
.2 ASTM D523 - Standard Test Method for Specular Gloss 2014 (Reapproved 2018).
.3 ASTM D1781 - Standard Test Method for Climbing Drum Peel for Adhesives 1998 (Reapproved 2021).
.4 ASTM D2244 - Standard Practice for Calculation of Color Tolerances and Color Differences from Instrumentally Measured Color Coordinates 2021.
.5 ASTM D4212 - Standard Test Method for Viscosity by Dip-Type Viscosity Cups 2016.
.6 ASTM D4214 - Standard Test Methods for Evaluating the Degree of Chalking of Exterior Paint Films 2007 (Reapproved 2015).
.7 ASTM E84 - Standard Test Method for Surface Burning Characteristics of Building Materials 2022.
.8 ASTM E283 - Standard Test Method for Determining the Rate of Air Leakage Through Exterior Windows, Curtain Walls, and Doors Under Specified Pressure

Differences Across the Specimen 2004 (Reapproved 2012).

.9 ASTM E331 - Standard Test Method for Water Penetration of Exterior Windows, Skylights, Doors, and Curtain Walls by Uniform Static Air Pressure Difference 2000 (Reapproved 2016).

.10 NFPA 285 - Standard Fire Test Method for Evaluation of Fire Propagation Characteristics of Exterior Wall Assemblies Containing Combustible Components 2019.

1.05 DEFINITIONS

.1 ACM: Aluminum Composite Material

1.06 ADMINISTRATIVE REQUIREMENTS

.1 Pre-installation meeting:

.1 Conduct a pre-installation meeting at the job site attended by the *Owner*, the *Contractor*, *Consultant,* manufacturer's technical representative, installer, and other *Contractors* whose work affects or is affected by the *Work* of this section.

.2 The agenda to include:

.1 Structural support requirements for the ACM canopy panels.

.2 Condition and completeness of the building substrate.

.3 Details of construction and interface between the ACM canopy panel system and adjacent construction. Specifically show how ACM panel system will be secured to all Insulated Metal Panels.

.4 Manufacturers' installation instructions and warranty requirements.

.5 Other requirements specific to the *Project.*

1.07 SUBMITTALS

.1 See Division 01 - General & Supplementary Requirements, for submittal procedures.

.2 *Shop Drawings:*

.1 Show layout and elevations, dimensions and thickness of panels, connections, details and location of joints, sealants and gaskets, method of anchorage, hidden fasteners, number of anchors, supports, reinforcement, trim, flashings, and accessories.

.1 Indicate a panel numbering system.

.2 Differentiate between shop and site fabrication.

.3 Indicate substrates and adjacent work with which the wall system must be coordinated.

.1 Coordinate with the insulated metal panel manufacturer to ensure proper support for the ACM panels.

.4 Include large-scale details of anchorages and connecting elements.

.5 Include large-scale details or schematic, exploded or isometric diagrams to fully explain flashing at a scale of not less than 1:5.

.2 The panel system, including all related connections and fastenings, shall be designed by a structural engineer permanently licensed to practise in the province in which the *Work* will take place. Each of the *Shop*

Drawings submitted shall bear the stamp and signature of the aforesaid structural engineer.

.3 *Product* Data: Provide manufacturer's data sheets on each *Product* to be used. Include:

.1 Panel thickness, physical characteristics, and finish.
.2 Finish manufacturer's data sheet showing physical and performance characteristics.
.3 Storage and handling requirements and recommendations.
.4 Installation instructions and recommendations.
.5 Specimen warranty for finish, as specified herein.

.4 *Product* Data - Wall System: Manufacturer's data sheets on each *Product* to be used, including:

.1 Physical characteristics of components shown on *Shop Drawings*.
.2 Storage and handling requirements and recommendations.
.3 Installation instructions and recommendations.
.4 Specimen warranty for wall system, as specified herein.

.5 Samples:

.1 For each ACM panel *Product* specified, submit at duplicate sets of sample colour chips 75 mm X 100 mm minimum size, representing the manufacturer's standard range of available colours and textures.
.2 For each ACM panel type, submit duplicate 300 mm x 300 mm samples representing the actual panel system assembly, fabricated from the actual materials finished in the specified colour and texture.
.1 Include examples of panel edge details, supporting members and method of attachment.
.3 For each ACM panel type, submit a sample of the sealant to be used.
.1 Sealant colour is to match the ACM panels.

.6 Mock-Up: Provide a mock-up for evaluation of fabrication and installation workmanship.

.1 Locate where directed by the *Consultant.*
.2 Coordinate with Section 07 42 13 - Insulated Metal Wall Panels - Standard Core * , as applicable, and incorporate all components of the wall and canopy assembly, including back-up barrier wall panels supporting the ACM panel system.
.3 Incorporate all components of the wall assembly, including back-up wall supporting the ACM panel system.
.4 Provide a minimum of four adjacent panels to illustrate both horizontal and vertical panel joints.
.5 Panels to be finished as specified.
.6 Mock-up to be reviewed on site and signed off by the designing structural engineer to ensure conformance with shop drawing design.
.7 The accepted mock-up may remain as part of the *Work* and will be the standard of acceptance for the *Work* of this section.

.7 Certification: Provide manufacturer's certification that the work results of this section meet or exceed specified requirements.

.8 Installer's Qualification Statement.

.9 Manufacturer's Site Reports: Provide within 48 hours of site review. State what was observed and what changes, if any, were requested or required.

.10 Maintenance Data: Provide maintenance data for incorporation into the operation and maintenance manual specified in Division 01, General and Supplementary conditions of the Contract.

.1 Include care of finishes and warranty requirements.

.11 Executed Warranty: Submit warranty and ensure that forms have been completed in the *Owner*'s name and registered with the manufacturer.

1.08 QUALITY ASSURANCE

.1 Manufacturer Qualifications: A company with not less than five years of documented experience in the manufacture of the ACM wall panel systems specified in this section.

.2 Installer Qualifications: A company with not less than three years of documented experience in the installation of ACM wall panel systems and licensed by the ACM wall panel manufacturer as an approved installer.

.1 Employ only skilled tradespersons who are skilled in this work.

.2 If requested by the *Consultant,* provide evidence of previously completed projects of a similar nature.

1.09 DELIVERY, STORAGE, AND HANDLING

.1 Deliver *Products* in the manufacturer's original, unopened, undamaged containers with identification labels intact.

.1 Protect finishes by applying heavy duty removable plastic film during production.

.2 Package for protection against transportation damage.

.3 Provide markings to identify components consistent with the *Drawings.*

.4 Exercise care in unloading, storing and installing panels to prevent bending, warping, twisting and surface damage.

.2 Store *Products* protected from exposure to harmful weather conditions and at temperature conditions recommended by the manufacturer.

.1 Store in a well ventilated space out of direct sunlight.

.2 Protect from moisture and condensation with tarpaulins or other suitable weathertight covering, installed to provide ventilation.

.3 Store at a slope to ensure positive drainage of any accumulated water.

.4 Do not store in any enclosed space where the ambient temperature can exceed 49 degrees C.

.5 Avoid contact with any other materials that might cause staining, denting, or other surface damage.

1.10 WASTE MANAGEMENT AND DISPOSAL

.1 Cooperate with the waste management coordinator in the implementation of the waste management plan specified in Division 01, General and Supplementary Conditions of the *Contract*.

.2 Handle and dispose of waste materials, including packaging materials, generated by the *Work* of this section in accordance with the waste management plan.

1.11 WARRANTY

.1 In addition to the warranty prescribed in Division 01, General and Supplementary conditions of the *Contract,* Provide the ACM sheet manufacturer's finish warranty stating that the finish will perform as follows for minimum of 5 years:

.1 Chalking: No more than that represented by a No. 8 rating based on ASTM D4214.

.1 The aluminum composite material manufacturer shall warrant for a period of 30 years against Max 5 fade based on ASTM D2244 and Max 8 chalk based on ASTM D4212 and delamination of the paint finish.

.2 Colour Retention: No fading or colour change in excess of 5 Hunter colour difference units, calculated in accordance with ASTM D4214.

.3 Gloss Retention: Minimum of 30 percent gloss retention, when tested in accordance with ASTM D523.

.2 In addition to the warranty prescribed in Division 01 - General Conditions of the *Contract,* the ACM sheet manufacturer shall warrant for a period of ten (10) years that the material will be free from defects including delamination.

PART 2 PRODUCTS

2.01 MANUFACTURERS

.1 This specification is based on Alucobond aluminum composite material (ACM) sheet wall panel systems licensed by A Vitru, LLC to Alucobond, 3A Composites USA Inc.

.2 Requests for *Substitutions* will be considered in accordance with the provisions of Division 01, General and *Supplementary* conditions of the *Contract* . Acceptance of alternative *Products* is subject to the approval of the *Consultant* and the *Owner.*

.3 Obtain ACM wall panel systems and their related components from a single manufacturer.

2.02 ALUMINUM COMPOSITE MATERIAL (ACM) CANOPIES

.1 Standard of acceptance: Alucobond Plus with the following characteristics:

.1 Dimensions:

.1 Thickness:

.1 Interior skin: 0.5 mm.

.2 Exterior skin: 0.5 mm.

.3 Overall thickness: 4 mm.

.2 Core: Standard.

.3 Core: Fire retardant, where required in Drawings.

.4 Exterior Finish: Colour anodized.

.1 Colour as per the Drawings.

.2 Performance requirements:

.1 Peel strength: 100 N x mm/mm when tested for bond integrity in accordance with ASTM D1781.

.2 Fire Performance (ASTM E84):

.1 Smoke developed: Less than 450.

.3 Air Infiltration: Air leakage of not more than 0.3 L/s per m^2 of wall area when tested in accordance with ASTM E283 at a pressure difference of 300 Pa.

.4 Water Penetration under Static Pressure: No water penetration to room side of assembly when tested for 15 minutes in accordance with ASTM E331 at a pressure difference of 300 Pa.

2.03 ACM WALL PANEL SYSTEM

.1 Performance:

.1 Fire Performance: Tested in accordance with, and complying with the acceptance criteria of, NFPA 285.

.1 Fire performance test results must be acceptable to the authority having jurisdiction.

.2 Thermal Movement: Provide for free and noiseless vertical and horizontal thermal movement due to expansion and contraction under a material temperature range of minus 29 degrees C to plus 82 degrees C without buckling, opening of joints, undue stress on fasteners, or other detrimental effects; allow for the ambient temperature at time of fabrication, assembly, and erection procedures.

.3 Wind Performance: Provide system that will perform without permanent deformation or failures of structural members under the following conditions:

.1 Design Wind Pressure: 1.2 kPa.

.2 Maximum deflection of perimeter framing member of L/175 normal to plane of the wall; maximum deflection of individual panels of L/60.

.3 Maximum anchor deflection in any direction of 1.6 mm at connection points of framing members to anchors.

.2 Air Infiltration: Air leakage of not more than 0.3 L/s per m^2 of wall area when tested in accordance with ASTM E283 at a pressure difference of 300 Pa.

.3 Water Penetration under Static Pressure: No water penetration to room side of assembly when tested for 15 minutes in accordance with ASTM E331 at a pressure difference of 300 Pa.

.1 Water penetration is defined as the appearance of uncontrolled water on the interior face of the wall.

.2 Design to drain leakage and condensation to the exterior face of the wall.

.4 Building Envelope Performance: To comply with ASHRAE Std 90.1 I-P when tested as part of a building envelope assembly.

2.04 PANEL SYSTEM DESIGN AND FABRICATION

.1 Coordinate with Section 054100 - Structural Metal Stud Framing *, Section 07 42 13 - Insulated Metal Wall Panels - Standard Core * and Section 07 42 15 - Insulated Metal Wall Panels - Mineral Wool Core * and design the support system for the ACM panel system in conjunction with the support system specified for IMPs to provide an integrated structural support system for the ACM wall panels

.2 Coordinate with the *Work* of other applicable Sections to design the support system for the ACM wall panels, including fasteners, and anchors as required for an installed ACM wall panel system capable of maintaining the specified performance without defects, damage or failure.
- .1 The ACM manufacturer is to confirm the insulated metal panel system and back-up support system has accounted for the ACM canopies.
- .2 The ACM design, steel stud, IMP and ACM suppliers are responsible to coordinate their individual requirements with each other to ensure that adequate structural support is provided for their responnective systems. Each of the suppliers is required to review and coordinate with the adjacent systems that affect the installation and support of their systems.
- .3 Provide structural design by or under direct supervision of a structural engineer licensed in the province in which the *Project* is located.
- .4 Support system members and fasteners to be corrosion resistant
- .5 Provide galvanized steel clips for support of cladding z-girts, angles, channels and other framing.
- .6 Anchor panels to supporting framing without exposed fasteners.

.3 Panels: 4 mm thick panels formed of aluminum composite material sheet by routing back edges of sheet, removing corners, and folding edges.
- .1 Reinforce corners with riveted aluminum angles.
- .2 Provide concealed attachment to the supporting structure by adhering attachment members to the back of the panel.
  - .1 Attachment members may also function as stiffeners.
- .3 Maintain a maximum panel bow of 0.8%of the panel width and length; provide stiffeners of sufficient size and strength to maintain panel flatness without showing local stresses or read-through on the panel face.
- .4 Secure members to the back face of panels using the ACM sheet manufacturer's recommended method.
- .5 Fabricate panels under controlled shop conditions.
- .6 Where final dimensions cannot be established by site measurement before commencement of fabrication, make allowance for site adjustments without requiring site fabrication of panels.
- .7 Fabricate as indicated on the reviewed and accepted *Shop Drawings* and as recommended by ACM sheet manufacturer.
  - .1 Make panel lines, breaks, curves and angles sharp and true.
  - .2 Keep panel surfaces free from warp or buckle.
  - .3 Keep panel surfaces free of scratches or marks caused during fabrication.
- .8 Design joint details to provide a watertight and structurally sound wall panel system that allows no uncontrolled water penetration on the inside face of the panel system.

PART 3 EXECUTION

3.01 EXAMINATION

.1 Examine areas and conditions under which work is to be performed and notify the *Contractor* in writing of conditions detrimental to the proper and timely completion of the *Work.*

.2 Examine dimensions, tolerances, and interfaces with other work.

.3 Examine substrate on-site to determine that conditions are acceptable for *Product* installation in accordance with the manufacturer's written instructions.

.4 Take field measurements to verify or supplement dimensions.

.5 Do not proceed with the work until unsatisfactory conditions have been corrected to the satisfaction of the installer.

.6 Commencement of the installation will be construed as acceptance of the site conditions and, thereafter, the *Contractor* shall be fully responsible for satisfactory work as specified herein.

3.02 PREPARATION

.1 Protect adjacent work areas and finish surfaces from damage during installation.

3.03 INSTALLATION

.1 Do not install *Products* that are defective, including warped, bowed, dented, and broken members, and members with damaged finishes.

.2 Comply with instructions and recommendations of ACM sheet manufacturer and wall system manufacture and the reviewed and accepted *Shop Drawings*.

.3 Do not handle or tool *Products* during erection in manner that damages finish, decreases strength, or results in visual imperfection or failure in performance. Return component parts that require alteration to the shop for refabrication, if possible, or for replacement with new parts.

.4 Do not form panels on site unless required by the wall system manufacturer and approved by the *Consultant;* comply with the ACM sheet manufacturer's instructions and recommendations for site forming.

.5 Separate dissimilar metals; use gasket fasteners, isolation shims, or isolation tape where needed to eliminate possibility of electrolytic action between metals.

.6 Install flashings as indicated on the reviewed and accepted *Shop Drawings*. At flashing butt joints, add a strip of flashing lapped under the butt jointed flashing and seal lapped surfaces with a full bed of non-hardening sealant.

.7 Install square, plumb, straight, and true, accurately fitted, with tight joints and intersections maintaining the following installation tolerances:

.1 Variation From Plane or Location: 10 mm in 10 m of length and up to 20 mm in 100 m, maximum.

.2 Deviation of Vertical Member From True Line: 3 mm in 9 m run, maximum.

.3 Deviation of Horizontal Member From True Line: 3 mm in 9 m run, maximum.

.4 Offset From True Alignment Between Two Adjacent Members Abutting End To End, In Line: 0.75 mm, maximum.

.8 Repair damaged *Products* to the *Consultant's* satisfaction.

.1 Replace *Products* which cannot be satisfactorily repaired.

3.04 SITE QUALITY CONTROL

.1 ACM wall panel system manufacturer's site *Services*: Provide site *Services* consisting of *Product* use recommendations and periodic site visits for inspection

of *Product* installation in accordance with instructions.

3.05 CLEANING

.1 Ensure weep holes and drainage channels are unobstructed and free of dirt and sealants.

.2 Remove protective film after installation of joint sealers, after cleaning of adjacent materials, and immediately prior to completion of *Work*.

.3 Remove temporary coverings and protection of adjacent work areas.

.4 Clean installed *Products* in accordance with manufacturer's instructions.

.5 Remove from the premises all surplus material, dirt and debris caused by the *Work* of this section and leave the installation clean.

.6 Make good damage to other work caused by the *Work* of this section.

3.06 PROTECTION

.1 Protect installed panel system from damage until the date of *Ready-For-Takeover.*

END OF SECTION 07 42 43

This page intentionally left blank

SECTION 07 52 16
SBS MODIFIED BITUMINOUS ROOFING

PART 1 GENERAL

1.01 RELATED DOCUMENTS

.1 Drawings and general provisions of the Contract, including General and Supplementary Conditions and Division 01 Specifications sections, apply to this section.

1.02 SUMMARY OF WORK

.1 Work Included: The Work of this section includes the provision of all labour, materials, equipment and Services required to install an SBS modified bituminous roofing system, as indicated on the Drawings, as specified herein and as required for a complete Project.

1.03 RELATED REQUIREMENTS

.1 Steel Deck: Refer to Structural.

.2 Section 06 10 00 - Rough Carpentry

.3 Section 07 27 13 - Non-permeable Air/Moisture/Vapour Barrier **

.4 Section 07 27 16 - Permeable Air/Moisture Barrier **

.5 Section 07 62 00 - Sheet Metal Flashing and Trim

.6 Section 07 92 00 - Joint Sealants

.7 Plumbing: Refer to Mechanical.

.8 Heating, Ventilation and Air Conditioning (HVAC): Refer to Mechanical

1.04 REFERENCE STANDARDS

.1 CAN/CSA A123.21 - Standard Test Method for the Dynamic Wind Uplift Resistance of Membrane Roofing Systems 2020.

.2 CAN/ULC S704.1 - Standard for Thermal Insulation, Polyurethane and Polyisocyanurate, Boards, Faced 2017.

.3 CGSB 37-GP-56M - Membrane, Modified, Bituminous, Prefabricated, and Reinforced for Roofing 1980.

.4 CSA A123.4 - Asphalt for Constructing Built-Up Roof Coverings and Waterproofing Systems 2004 (Reaffirmed 2018).

1.05 QUALITY ASSURANCE

.1 The membrane manufacturer shall be IS0 9001 certified

.1 Upon request from the *Consultant*, submit a copy of the manufacturer's certificate indicating that all *Products* supplied in this specification conform to IS0 9001.

.2 The Roofing *Contractor* shall be licensed by the material manufacturer as an approved installer and shall have a minimum of ten (10) years documented successful experience in the installation of modified bituminous roofing systems of the type required for this *Project.*

.1 If requested by the *Consultant,* provide evidence of previously completed projects of a similar nature and scope.

.3 Applicable CRCA and/or the OIRCA standards shall apply to the *Work* of this section.

1.06 SUBMITTALS

.1 See Division 01, General and Supplementary Conditions of the *Contract* for submittal procedures.

.2 Product Data:

.1 Provide complete manufacturer's technical data for each *Product.*

.2 Include installation instructions.

.3 Include manufacturer's material safety data sheets for the safe handling of the specified materials and products, in accordance with WHMIS requirements.

.3 Testing:

.1 Upon request from the *Consultant,* provide the results of mechanical and chemical testing performed on the materials supplied.

.2 The tests shall be performed to certify compliance with CGSB 37-GP-56M

.4 Manufacturer's Qualification Statement

.5 Installer's Qualification Statement

1.07 MANUFACTURER'S REPRESENTATIVE

.1 The work shall be carried out under the general supervision of a representative of the roofing system manufacturer.

.2 At all times, permit and facilitate access to the work site by the system manufacturer's representative.

1.08 FIELD QUALITY CONTROL

.1 Before the commencement of roofing operations, convene a preinstallation meeting with the following parties in attendance:

.1 *Contractor*

.2 *Consultant*

.3 Roofing Inspector

.4 Roof Membrane manufacturer's representative

.5 Roofing Contractor

.6 Other trades whose work affects or is affected by the *Work* of this section.

.2 Subsequently, give two (2) working days prior notice to the Roofing Inspector of the commencement of each phase of the work, and provide him/her with materials and installation information as required.

.3 On completion of each portion of the roof, conduct, in the presence of and under the direction of the Roofing Inspector, a flood test of that portion. Ensure that the entire roof area has been subjected to a flood test when the installation is complete.

.4 Cooperate with the Roofing Inspector and afford all facilities necessary to permit full inspection of the work and testing of materials prior to and during their use and during the warranty period. Act immediately on instructions given by the *Consultant.*

1.09 DELIVERY, STORAGE AND HANDLING

.1 Deliver and store materials in their original packaging, bearing the manufacturer's name, the Product name, related standards and other relevant information or reference.

.2 Adequately protect and permanently store all materials in a dry, well ventilated and weatherproof location.

.1 During winter, store materials in a heated location with a 10ºC minimum temperature.
.2 Remove only as needed for immediate use.
.3 Keep materials away from open flame or welding sparks.

.3 Carefully store materials delivered in rolls on end, with salvage edges up; store metal flashings in such a way as to prevent wrinkling, twisting, scratches and other damage.

.4 Avoid stockpiling materials on decks in a way which could cause overloading.

1.10 PROTECTION

.1 During roofing work, protect exposed surfaces of finished walls with tarps in order to prevent damage. Assume full responsibility for damage to other work caused by the *Work* of this section.

1.11 WASTE MANAGEMENT AND DISPOSAL

.1 Cooperate with the Waste Management Coordinator in the implementation of the Waste Management Plan specified in Section 01 74 19 - Construction Waste Management and Disposal

.2 Handle and dispose of waste materials, including packaging materials, generated by the work of this Section in accordance with the Waste Management Plan.

1.12 WARRANTY

.1 For the work of this section, the warranty prescribed in the General Conditions of the Contract is extended to ten (10) years.

.2 Membrane manufacturer's warranty: In addition to the ten (10) year warranty specified above, provide a written warranty, signed and issued in the name of the *Owner,* stating that the membrane manufacturer will guarantee to repair at his own expense any leaks in the roofing membrane or flashing membrane resulting from defects in the manufacture of the membrane for a period of ten (10) years from the date of Ready-For-Takeover

.3 Roofing *Contractor*'s warranty: In addition to the ten (10) year warranty specified above, provide a written warranty, signed and issued in the name of the *Owner,* stating that the Roofing *Contractor* will guarantee to repair at his own expense any leaks in the roofing membrane or flashing membrane resulting from faulty workmanship, in accordance with the General Conditions of the *Contract* but for a period of five (5) years from the date of Ready-For-Takeover

PART 2 PRODUCTS

2.01 MANUFACTURERS

.1 This specification is based on SBS modified bituminous roofing systems by Soprema Inc.

.2 Subject to compliance with the specification requirements, equivalent products by the following manufacturers are acceptable alternatives:
.1 IKO Industries Ltd.
.2 Henry Co.

.3 Requests for substitutions will be considered in accordance with the provisions of Section 01 25 00 - Substitution Procedures. Acceptance of alternative products is subject to the approval of the Consultant.

.4 All components of the roofing system shall be obtained from or approved for use by a single manufacturer.

2.02 ASPHALT PRIMER

.1 Black bituminous varnish comprising asphalt modified bitumen with thermoplastic polymers and volatile solvents, as recommended by the roofing system manufacturer for the specific substrate.

.2 Apply primer to each surface to be covered with membrane in accordance with the manufacturer's instructions.

2.03 BITUMEN

.1 Type II and III asphalt to CSA A123.4 bitumen with thermoplastic polymers and volatile solvents.

2.04 VAPOUR RETARDER

.1 Primer: Composed of SBS synthetic rubbers, adhesion-enhancing resins and volatile solvents, as recommended by the system manufacturer to enhance the adhesion of the self-adhesive vapour barrier.

.1 Standard of acceptance: Elastocol Stick primer by Soprema.

.2 Self-adhesive vapour barrier membrane composed of a tri-laminated woven polyethylene facer and SBS modified bitumen, the undersurface covered with a silicone release film.

.1 Tested in accordance with CAN/CSA A123.21; FM approved and ULC listed.

.2 Apply membrane by self-adhesion on a primed substrate.

.3 Standard of acceptance: Sopravap'r by Soprema.

2.05 INSULATION

.1 Board Insulation: Closed-cell polyisocyanurate foam insulation board, integrally laminated to two fibre-reinforced organic felt facers, to CAN/ULC S704.1, CFC-free and conforming to Environment Canada Ozone-Depleting Substances regulations, minimum RSI 1.04 M^2 °C/W per 25 mm thickness, maximum board size 1219 mm x 1219 mm; thickness as indicated.

.1 Standard of acceptance: Colgrip B by Soprema.

.2 Sloped insulation: Factory pre-engineered tapered polyisocyanurate sloped insulation compatible with the roof membrane system. Provide slopes at roof drain areas as required to obtain minimum 1:50 roof slopes, including the upslope side of HVAC equipment and other curbs to divert run-off from accumulating behind the units.

.2 Protection Board: Semi-rigid protection board composed of a mineral-fortified asphalt core formed between two saturated fibreglass felts.

.1 Torch-safe.

.2 Thickness 3.2 mm.

.3 Standard of acceptance: Sopraboard by Soprema.

2.06 ROOF MEMBRANE MATERIALS

.1 Base Sheet: Thermofusible elastomeric bitumen (SBS modified bitumen) reinforced with a non-woven polyester reinforcement, top face covered with a thermofusible plastic film, under face lightly sanded; conforming to CGSB 37-GP-56M, Type 2, Class C, Grade 2. Thickness 2.2 mm (2.0 mm min.). Standard

of acceptance: Soprema Elastophene 180 PS.

.1 Apply membrane by bonding with hot asphalt.

.2 Components:

.1 Reinforcement: Non-woven polyester 180 g/m^2

.2 Modified bitumen: Mix of selected bitumen and SBS thermoplastic polymer.

.2 Base Sheet Stripping (flashing): Thermofusible elastomeric bitumen (SBS modified bitumen) reinforced with a glass fibre reinforcement, top face covered with a thermofusible plastic film, underside covered with a silicone release plastic film protecting the self-adhesive underface; conforming to CGSB 37-GP-56M , Type 2, Class P, Grade 1. Thickness 2.6 mm. Standard of acceptance: Soprema Sopraflash Flam Stick.

.1 Apply membrane by self-adhesion on primed substrate. Use self-adhesive membrane base sheet in all locations where the substrate consists of wood or wood products (i.e. wood blocking).

.2 Components:

.1 Reinforcement: Non-woven polyester 130 g/m^2

.2 Modified bitumen: Mix of selected bitumen and SBS thermoplastic polymer.

.3 Primer: As recommended by the system manufacturer.

.3 Cap Sheet and cap sheet stripping (flashing): Thermofusible elastomeric bitumen (SBS modified bitumen) reinforced with a non-woven polyester reinforcement, topside self-protected with highly reflective mineral granules, underside protected by thermo-fusible plastic film, conforming to CGSB 37-GP-56M, Class C, Type 2, Grade 2. Approximate nominal average thickness 4.0 mm. Standard of acceptance: Soprema Sopralene Flam 250 GR.

.1 Components:

.1 Apply membrane by torching only.

.2 Reinforcement: Non-woven polyester 250g/m^2

.3 Modified bitumen: Mix of selected bitumen and SBS thermoplastic polymer.

2.07 ACCESSORIES

.1 Cant Strip (provide only when required by the roofing system manufacturer): Fire-resistant wood fibre.

.2 Roofing nails:

.1 Galvanized round top cap nails, 25 or 38 mm or equivalent stainless steel or galvanized fastenings as recommended by material manufacturers or as required for the purpose.

.2 Nails shall be long enough to penetrate the substrate by at least 20 mm on flashings and parapet walls.

.3 Screws: FM-approved screws for fastening of insulation. Screws to penetrate the deck, minimum 20 mm (maximum 20 mm where deck is exposed in the building interior). The frequency and pattern all to meet FM I-90 windstorm requirements, including additional quantities at corners and at the perimeter.

.4 Roof drain sumps: 1200 mm x 1200 mm sump kits. Provide at all roof drains.

.5 Expansion Joints (where indicated): Curb-mounted expansion joint cover consisting of four 0.46 mm (26 ga) metal nailing strips heat-fused to twin 1 mm thick layers of flexible reinforced flashing membrane made from PVC/rubber alloy reinforced with polyester scrim, complete with a fire-retardant neoprene foam strip bonded in the centre to help insulate the expansion joint. Design for 65 mm wide expansion joints as indicated.
- .1 Horizontal surface to horizontal surface.
- .2 Horizontal surface to vertical surface.

.6 Liquid Membrane Flashing: one-component polyurethane and bitumen liquid membrane, and a flexible 100 g/m^2 woven polyester reinforcing membrane, as recommended by roofing membrane manufacturer.

.7 Walkways and splashpads.
- .1 Mats: Recycled rubber mat, purpose-made for protecting roof membranes from excessive foot traffic, top face embossed with a hexagonal pattern, underside grooved at 25 mm o.c. for drainage. Size: 1219 mm x 1829 mm x 19 mm thick. Standard of acceptance: Soprema Sopramat.
- .2 Adhesive: As recommended by the mat manufacturer. Standard of acceptance: IC Sealant.

.8 Loose granules, composition and colour to match granule surface of roofing membranes. Granules to be embedded into heated asphalt surfaces at joints between rolls and at other locations where the visual continuity of the granule surface is interrupted.

.9 Metal flashings, vents and pipe sleeves: Refer to Section 07 62 00 - Sheet Metal Flashing and Trim

.10 Roof drains: Refer to Mechanical.

PART 3 EXECUTION

3.01 INSTALLATION - GENERAL

- .1 Do not install materials under conditions of rain, snow or fog
- .2 Install roofing elements on clean and dry surfaces, in accordance with the manufacturer's requirements and recommendations.
- .3 Perform work on a continuous basis as surface and weather conditions allow.
- .4 Protect adjoining surfaces against any damage that could result from the roofing installation.

3.02 EQUIPMENT

- .1 Maintain all equipment and tools in good working order.
- .2 Use torch types recommended by the membrane manufacturer.

3.03 ASPHALT PRIMER APPLICATION

- .1 Treat all surfaces to be roofed, with primer to improve adhesion. Apply by brush or roller at the manufacturer's recommended rate.
- .2 Note that the drying time of the primer is related to the ambient temperature and may vary from a few hours to a whole day. Do not proceed until the primer is dry.

3.04 VAPOUR RETARDER INSTALLATION

- .1 Coordinate with other trades as required to ensure the continuity of the building vapour barrier at the interface between the roofing assembly and adjacent wall

assemblies.

.2 Hand over starter strips of self-adhesive vapour barrier membrane for installation by other trades where required.

.3 Install the self-adhesive vapour retarder, in accordance with the manufacturer's instructions

.4 Ensure that primer coating is dry before application of the vapour barrier membrane.

.5 Install parallel to the long side of the roof.

.6 Roll the entire surface to make sure the membrane is properly adhered, without air pockets, wrinkles, fishmouths or tears.

.7 Roll the lap joints to ensure full adhesion.

.8 Maintain continuity with the building air/vapour barrier system as indicated on the drawings.

3.05 INSULATION INSTALLATION

.1 Install insulation boards in two layers of the thicknesses indicated on the drawings.

.2 Stagger all joints in the boards and mechanically fasten in accordance with FM I-90 requirements.

.3 Install sloped insulation where required to maintain slope of roof to roof surface drains. In particular, provide water diverters on the upslope sides of HVAC equipment curbs to direct run-off from accumulating behind the units. Set sloped insulation in a full mop coating of bitumen.

.4 Install a roof drain sump at each roof drain. Ensure that the sump is installed at the proper elevation to function correctly.

.5 Install protection board over the entire surface of the insulation, mechanically fastened to FM I-90 requirements.

3.06 BASE MEMBRANE APPLICATION

.1 Install the base membrane over the protection board

.2 Commencing at the lowest point of the roof, embed the base sheet in a full mop coat of approximately 1.2 kg/m^2 of asphalt. Apply base sheet with 75 mm side laps and 150 mm end laps. Extend the base sheet up vertical surfaces, as indicated on the drawings, in a full mop of asphalt.

.3 Ensure the base sheet is unrolled to enable the membrane to relax prior to installation. The time required for relaxation will vary according to weather conditions.

.4 Torch-weld all lap joints by heat softening the membrane and pressing the edge of the membrane firmly with a roofing trowel.

.5 Apply asphalt not more than 1.5 m ahead of the membrane as it is being applied, while ensuring complete bonding.

.6 Ensure the base sheet membrane is installed parallel to the long side of the underlying insulation cap sheet.

.7 After installation of the membrane, check all lap seams on the cap sheet by running a trowel along the seam.

3.07 BASE SHEET STRIPPING (FLASHING) MEMBRANE APPLICATION

.1 Install the base sheet stripping, in accordance with the manufacturer's instructions.

.2 Ensure that primer coating is dry before application of the base sheet stripping.

.3 Lay base sheet stripping in strips 1 metre wide to the vertical surfaces, extending on to the flat surface of the roof a minimum of 100 mm. Side laps shall be 75 mm and staggered a minimum of 100 mm relative to the laps of the base sheet.

.4 Install the self-adhesive base sheet stripping, in accordance with the manufacturer's instructions.

.5 Roll the entire surface to make sure the membrane is properly adhered, without air pockets, wrinkles, fishmouths or tears.

.6 Roll the lap joints to ensure full adhesion.

.7 After installation of the membrane, check all lap seams by running a trowel along the seam.

.8 Nail the base sheet top edge to the substrate at 300 mm o.c. in accordance with the manufacturer's recommendations.

3.08 CAP SHEET INSTALLATION

.1 Ensure that base membrane and reinforcement membrane are in place and without defects.

.2 Unroll the cap sheet membrane, starting from a low point of the roof. Reroll from both ends prior to torching. Take care to ensure good alignment of the first roll, parallel with the edge of the roof. Stagger joints at least 300 mm relative to reinforcement membrane and to base sheet membrane.

.3 Take particular care to maintain a consistent direction and alignment of joints between adjacent sheets as directed by the Consultant.

.4 Torch-weld the membrane to the base sheet in accordance with the membrane manufacturer's recommendations. During this application, melt the undersurfaces forming an asphalt bead that is pushed out in front of the base sheet as the work proceeds.

.5 Take care not to burn the membrane and its respective reinforcements.

.6 Lap sides 75 mm and ends 150 mm. Stagger end laps so as to avoid 4 overlaps. Stagger laps at least 300 mm relative to laps in base membrane and in the reinforcement membrane.

.7 Avoid asphalt seepage at the seams greater than 5 mm.

.8 Heat the surface granules on laps and imbed into the liquid bitumen prior to installation of following sheets.

.9 Make sure the membrane is properly welded, without air pockets, wrinkles, fishmouths or tears

.10 After installation of the membrane, check all lap seams on the cap sheet by running a trowel along the seam.

3.09 CAP SHEET STRIPPING (FLASHING) INSTALLATION

.1 Torch weld cap flashing membrane in place.

.2 Lay membrane in strips one metre wide. Side laps to be 75 mm, staggered at least 300 mm relative to the cap sheet.

.3 At parapets and curbs, extend the membrane 150 mm out onto the roof, up the back face of the parapet, over the top of the parapet and terminate 50 mm down the outer face of the parapet unless indicated otherwise.

.4 At other vertical surfaces extend the membrane 150 mm out onto the roof, over the cant strip, up the back face of the parapet to the elevation indicated or where required for a complete, watertight installation.

.5 Torch-weld reinforcement stripping directly onto its support from bottom to top.

Torch-weld so as to soften the underside of the reinforcement stripping without overheating, resulting in a uniform adhesion over the entire surface.

.6 Take care not to burn the membrane and its respective reinforcements.

.7 Make sure the membrane is properly welded, without air pockets, wrinkles, fishmouths or tears.

.8 During installation, avoid asphalt seepage greater than 5 mm at seams.

.9 Nail the top edge in accordance with the manufacturer's recommendations.

.10 After installation of the membrane, check all lap seams by running a trowel along the seam

3.10 ROOF DRAINS

.1 Coordinate with the plumbing trade to ensure proper seals to roof drains.

3.11 METAL FLASHINGS, EXPANSION JOINTS

.1 Install metal flashings as indicated on the drawings and as specified in Section 07 62 00 - Sheet Metal Flashing and Trim

.2 Install expansion joint cover where indicated on the drawings in strict accordance with the manufacturer's installation instructions. Ensure a complete weathertight bond with the roofing membrane.

3.12 VENT AND PIPE SLEEVE INSTALLATION

.1 Coordinate with Section 07 62 00 - Sheet Metal Flashing and Trim and install vents stack flashings and pipe sleeves specified in the noted Section.

.2 Install spun-aluminium vent stack covers at all vent pipes. Extend vent pipes as required to a minimum height of 400 mm above the completed membrane surface. Extension to be same material as existing vent pipe. Provide sufficient allowance for pipe expansion or contraction.

.3 Prime aluminium flange, centre over existing vent stack and set into

torch-softened base sheet. Flash with one ply of reinforcing membrane, to extend a minimum of 200 mm beyond flange. Complete installation with the application of the cap sheet membrane.

.4 Install batt insulation as specified in Section 07 21 00 - Board and Batt Insulation between vent stack and aluminium stack flashing.

.5 Caulk as detailed. Install a bead of modified bitumen caulking around the base of the vent stack flashing. Embed bulk granules into new sealant, colour to match cap sheet.

.6 Secure caps with self-tapping screws.

.7 Install all items required for a complete project. Refer to mechanical drawings for location and extent of mechanical penetrations through the roof.

3.13 WALKWAYS AND SPLASH PADS

.1 Install walkways and splash pads where indicated on the *Drawings.*

.2 Adhere walkway and splash pad mats to the roof surface using 5 - 13 mm wide strips of sealant per mat at 300 mm o.c, parallel to the long side of the mat so as not to obstruct the drainage grooves.

3.14 LOOSE GRANULE APPLICATION

.1 At all laps exposed to sight where the visual continuity of the finished membrane is interrupted, soften the exposed asphalt and embed loose granules to match granule surface of the membrane.

.2 The finished roof surface exposed to sight shall appear homogeneous and of consistent colour and texture, without blemish.

3.15 FIELD QUALITY CONTROL

.1 The *Owner* will engage an independent inspection and testing firm (Roofing Inspector) to conduct site inspections and tests to verify compliance with the Contract Documents. Tests shall include flood tests.

.2 Cooperate with the Roofing Inspector. Provide at least forty-eight (48) hours notice of commencement of each phase of the work. Provide the Inspector with unlimited access to the *Work.*

.3 The *Owner* reserves the right to require additional inspections and tests, to be paid for by the *Contractor*, if the initial inspections/tests indicate unsatisfactory workmanship.

3.16 CLEANING

.1 Upon completion of the installation, remove from the premises all surplus material, dirt and debris caused by the *Work* of this section and leave the installation clean.

.2 Clean any drippage and spills of surplus material from adjacent surfaces and make good damage caused by the work of this section.

END OF SECTION 07 52 16

SECTION 07 62 00
SHEET METAL FLASHING AND TRIM

PART 1 GENERAL

1.01 RELATED DOCUMENTS

.1 *Drawings* and general provisions of the *Contract*, including General and Supplementary Conditions and Division 01 Specifications sections, apply to this section.

1.02 SUMMARY OF WORK

.1 Work Included: The work of this section includes the provision of all labour, materials, equipment and Services required to fabricate and install sheet metal flashing and trim, as indicated on the *Drawings*, as specified herein and as required for a complete *Project*.

.2 The *Work* Includes:

.1 Fabricated sheet metal items, including flashings and counterflashings.

.2 Sealants for joints within Sheet Metal Fabrications.

.3 *Supply* and *Installation* of new prefinished sheet metal flashings and counter flashings to complete roof system installation. Unless specifically indicated otherwise, all references to sheet metal flashins in specifications and drawings to refer to new prepainted steel.

.4 form, break and install metal flashings to suit perimeter and projection details as specified on detail drawings.

.5 *Coordinate* all work in this section with other sections and trades as required to ensure proper installation of specified components.

1.03 RELATED REQUIREMENTS

.1 Section 06 10 00 - Rough Carpentry : Wood nailers and roof curbs to receive sheet metal work and

.2 Section 06 10 00 - Rough Carpentry: Field fabricated roof curbs.

.3 Section 07 42 13 - Metal Wall Panels - Standard Core *.

.4 Section 07 52 16 - SBS Modified Bituminous Roofing

.5 Section 07 72 33 - Roof Hatches *

.6 Section 07 92 00 - Joint Sealants: Sealing non-lap joints between sheet metal fabrications and adjacent construction.

1.04 REFERENCE STANDARDS

.1 AAMA 2605 - Voluntary Specification, Performance Requirements and Test Procedures for Superior Performing Organic Coatings on Aluminum Extrusions and Panels (with Coil Coating Appendix) 2017a.

.2 ASTM D226/D226M - Standard Specification for Asphalt-Saturated Organic Felt Used in Roofing and Waterproofing 2017.

.3 ASTM D4586/D4586M - Standard Specification for Asphalt Roof Cement, Asbestos-Free 2007 (Reapproved 2018).

.4 ASTM F1667 - Standard Specification for Driven Fasteners: Nails, Spikes, and Staples 2018.

.5 CAN/CGSB-1.108-M89 - Bituminous Solvent Type Paint 1989.

.6 CAN/CSA S269.2M - Access Scaffolding for Construction Purposes 2016.

.7 CRCA Roofing Specifications Manual - Roofing Specifications Manual Current Edition.

.8 CSA A123.3 - Asphalt Saturated Organic Roofing Felt 2005 (Reaffirmed 2020).

.9 SMACNA (ASMM) - Architectural Sheet Metal Manual 2012.

.10 ASTM A606 - Standard Steel Specification for High-Strength, Low-Alloy, Hot Rolled and Cold Rolled Sheet and Strip Steel with Improved Atmospheric

.1 Corrosion Resistance 2018.

.11 ASTM A653/A653M - Standard Specification for Steel Sheet, Zinc-Coated (Galvanized) or Zinc-Iron Alloy-Coated (Galvannealed) by the Hot-Dip Process 2018.

.12 ASTM A792/A792M - Standard Specification for Steel Sheet, 55% Aluminum-Zinc Alloy-Coated by the Hot-Dip Process 2010 (Reapproved 2015).

.13 CAN B111 – Wire Nails, Spikes and Staples.

.14 CAN/CGSB 51.32 –.Sheathing, Membrane, Breather Type.

.15 CAN/CGSB 93.1M Sheathing, Alumium Alloy, Prefinished, Residential

.16 SMACNA (ASMM) - Architectural Sheet Metal Manual 2012.

.17 SSPC-Paint 12 - Cold-Applied Asphalt Mastic (Extra Thick Film) 1982.

1.05 SUBMITTALS

.1 See Division 01, General and Supplementary conditions of the *Contract*, for submittal procedures.

.2 Shop Drawings: Indicate material thicknesses, profiles, jointing pattern, jointing details, fastening methods, flashings, terminations, and installation details.

.3 Warranty: *ProvideOwner* with a *Material* and *Workmanship Warranty* for sheet metal flashing work on contractor's letterhead, signed and authorized.

.4 Compatibility: Provide written certification to *Consultant* stating that materials and components of the roofing system and wall system as assembles in the system are compatible.

.5 Fabricator's/Installer's Qualification Statement.

.6 Mock-ups: Create mock-up sample of typical metal flashing detail and related accessories for review. Provide any additional mock-up samples as reasonably requested by *QA Observer*.

1.06 QUALITY ASSURANCE

.1 Perform work in accordance with SMACNA (ASMM) requirements and standard details, except as otherwise indicated.

.2 Fabricator and installer qualifications: A company specializing in sheet metal work with minimum ten (10) years of documented experience in the fabrication and installation sheet metal work similar to that required for this *Project.*

.3 *Contractor* and his staff must be certified by membrane *Manufacturer* and be pre-approved by *Owner* and *Consultant* prior to *Bid Submission.*

.4 *Contractor* must be a member in good standing with provincial Roofing Contractors Association and have a minimum ten (10) years relevant experience with similar roof materials.

1.07 DELIVERY, STORAGE, AND HANDLING

.1 Stack material to prevent twisting, bending, and abrasion, and to provide ventilation. Slope metal sheets to ensure drainage.

.2 Prevent contact with materials that could cause discolouration or staining.

.3 Do not store metals in direct contact with earth, road surface, roof deck, or other metals.

.4 Place suitable supports or pallets under metal stock upon delivery. Protect metal from scratches, dents, punctures and moisture.

.5 Store caulking and sealants at +5 degrees Celsius minimum.

.6 Handle and store products in a manner to prevent damage, oxidization, and deterioration.

.7 Remove and replace damaged products at own expense and to satisfaction of *Quality Assurance Observer/Consultant.*

.8 Apply materials in accordance with *Manufacturer*'s recommendations.

1.08 WASTE MANAGEMENT AND DISPOSAL

.1 Cooperate with the waste management coordinator in the implementation of the waste management plan specified in Division 01, General and Supplementary conditions of the Contract.

.2 Handle and dispose of waste materials, including packaging materials, generated by the work of this section in accordance with the waste management plan.

1.09 SAFETY AND PROTECTION

.1 References:

.1 CAN/CSA S269.2M : Access Scaffolding for Construction Purposes.

.2 FCC No. 301: Standard for Construction Operations.

.3 Comply with all safety requirements as per current printed edition of OHSA, and provincial Roofing Contractors Association standards.

.2 Solvents, Adhesives and Membranes

.1 Store only enough solvents and adhesives on roof for same day's use.

.2 Manufacturer supplied adhesives should be stored in their overnight containers.Minimum temperature for solvent based adhesives and primers is -5°C.

.3 Hoisting:

.1 Protect walls and roof perimeters where hoisting is required.

.2 Protect roofs from damage due to traffic and material handling until completion of project.

1.10 QUALITY ASSURANCE OBSERVATION

.1 An independent *Quality Assurance Observation Agency*, hereafter known as

.1 "QA Observer" or "Observer" to be appointed by *Owner* to observe performance of roof Work:

.2 Arrange Prestart site meeting with Observer no more than three (3) weeks prior to commencement of work on site.

.3 Provide to Observer, at least forty-eight (48) hours in advance, date when each phase of work will begin.

.4 Cooperate with Observer and afford all facilities necessary to permit full Quality Assurance Observations. Act immediately on instructions given by Observer.

.5 When required, provide roof cut-outs and samples in field where directed by Observer and make good without additional cost to the *Owner.*

.6 When initial tests and observations reveal work failing to meet contract requirements, pay for any additional testing and observations required by Observer or third party testing agency for correction of Work, without additional cost to Owner.

.7 Copies of Q.A. Observation Reports to be issued by Observer to *Owner* and *Contractor.*

1.11 PREPARATORY WORK

.1 Examine *Drawings* and specifications and any other necessary data which may affect installation to determine extent of Work involved in this Section.

.1 No additional claims against *Owner* to be allowed resulting from failure to ascertain full extent of Work required as described or implied.

.2 Prior to application of flashings, review roof perimeters and projections.

.3 Examine installed membrane flashings for any defect of level or construction before proceeding with work.

.4 Advise *Consultant* of any deficiencies that may affect performance of roof system and any deviation from specified tolerances.

.5 Defective or improper work must be corrected before proceeding with installation of sheet metal flashings.

1.12 WARRANTY

.1 Sheet Metal Flashings:

.1 Two (2) year Material Warranty and one (1) year Workmanship Warranty.

PART 2 PRODUCTS

2.01 SHEET MATERIALS

.1 All standards, regulations and specifications listed herein are considered to be the latest available edition.

.2 Compatibility between materials is essential. Use only materials that are known to be compatible when incorporated in a completed assembly.

.3 Cleats and Hook Strips not otherwiswe specified: Two gauges heavier of material matching that of flashing being employed; minimum 22 gauge.

2.02 JOINTING

.1 Linear mating of sections of cap flashings and parapet flashings to be with an “S” lock joint.

.2 Corner mating to be completed with a standing seam.

2.03 ACCESSORIES

.1 Fasteners: Stainless steel, to ASTM F1667, type as recommended by the installer for each specific application.

.2 Underlayment: ASTM D226/D226M , organic roofing felt, Type I (No. 15). Smooth unsaturated quality rosin sized paper weighing not less than 6 lbs per 100 ft2 (0.3 Kg/m2) unless otherwise shown to CSA A123.3.

.3 Joint Filler: Extruded polyethylene, closed cell, Shore A hardness 20, tensile strength 20 to 30 psi (140 to 210 kilopascals), 25% to 30% wider than joint to be caulked.

.4 Touch-UP Primer: Zinc chromate type.

.5 Touch-up paint: As recommended by pre-finished material manufacturer.

.6 Bituminous Paint: Gilsonite asphalt 910-02 by Bakelite to CAN/CGSB-1.108-M89 Type II.

.7 Concealed Sealants: Non-curing butyl sealant.

.8 Exposed Sealants: Refer to Section 07 92 00 - Joint Sealants

.1 Select sealant type to suit the specific application; colour to match adjacent material.

.9 Plastic Cement: ASTM D4586/D4586M, Type I.

.10 Back-priming sheet metal: High-build bituminous paint, SSPC-Paint 12.

2.04 FASTENERS

.1 Use galvanized, copper, aluminum or stainless steel nails or screws most compatible with materials being employed. Use fasteners as most suitable to *Manufacturer*s recommendation.

.2 Fasteners to Wood: Nails, annular threaded of length to penetrate into bases minimum 1" (25 mm) or No. 8 screws to penetrate surface by min. 0.75” (19 mm), at 24" (600 mm) o.c.

.3 Exposed Fasteners: Nylon headed, No.14 Colormate fasteners by Leland Industries with 7/16” (11mm) hex heads, self tapping or drilling point tips. Length to suit installation and with colour to match prepainted metal.

.4 Masonry Fasteners: Tapcon, Gripcon or Rawl spike sized to penetrate concrete 1.5" (38mm) minimum unless otherwise shown.

.5 Wedges: Rolled plumber sheet lead. Secure metal flashings on inside and should be secured with No.10 galvanized screws through neoprene washers at 30" (760 mm) o.c.

.6 Masonry Anchors: Rawl lead lags for screws as recommended by Manufacturer.

2.05 FABRICATION

.1 Fabricate metal flashings and other sheet metal work as indicated and as required for a complete installation. Fabricate all possible work in shop in 8' (2.4m) lengths by brake forming, bench cutting,

.1 drilling and shaping. On high vertical sections install metal in 4' (1.2m) section as specified and detailed. Profile metal to be cold rolled.

.2 Form pieces in 2400 mm maximum lengths. Make allowance for expansion at joints.

.3 On coping or flashing with a horizontal dimension of 16” (406mm) or greater, fabricate metal flashings in maximum 4’ (1.2m) sections.

.4 On coping or flashing with a horizontal dimension of 20” (508mm) or greater, use 1” (25mm) lock folded standing seam joints.

.5 Hem exposed edges on underside 12 mm. Mitre and seal corners with sealant.

.6 Form sections square, true and accurate to size, free from distortion and other defects detrimental to appearance or performance.

.7 Form bends with straight sharp lines, angles and corners into true planes, free from twists, buckles, dents and other visual distortions.

.8 Double-back exposed metal edges at least 0.5” (13mm). Raw edges will not be permitted.

.9 Form material with flat lock seams, except where otherwise indicated; at moving joints, use sealed lapped, bayonet-type or interlocking hooked seams.

.10 Fabricate cleats of same material as sheet, minimum [50] mm wide, interlocking with sheet.

.11 Apply isolation coating to metal surfaces to be embedded in concrete or mortar.

.12 Supply all accessories required for installation of sheet metal work of this Section.

.13 Fabricate accessories of same materials to which they will be used.

2.06 METAL FLASHINGS

.1 Form flashings, copings and parapet fascias to profiles indicated of prefinished metal sheet.

.2 Include flashings for roof dividers in general conformity withCRCA Roofing Specifications Manual detail FL.14 and for curbs in general conformity with CRCA Roofing Specifications Manual detail FL.23.

2.07 PIPE PENETRATIONS

.1 Provide and install 1.6 mm (16 ga) spun aluminum flashings and caps to all vent stacks.

.2 For flashing of miscellaneous mechanical and electrical items penetrating the roof membrane, provide:

.1 Factory prefabricated, insulated aluminum sleeve flashings, with matching aluminum collar, size to suit item to be flashed.

.2 Sleeve and collar to be fabricated from aluminum, with premoulded urethane insulation on the inner side, interior surfaces bituminous painted to prevent galvanic action with dissimilar metals. Aluminum for sleeve to be 1.6 mm (16 ga) thick and for collar to be 1.4 mm (17 ga) thick.

.3 Provide deck flange, integral with sleeve aluminum.

.4 Standard of acceptance: Roof accessories by Thaler Metal Industries Inc., (800) 287-7217 or type to suit each specific application.

.3 Pitch pockets are unacceptable.

PART 3 EXECUTION

3.01 EXAMINATION

.1 Review and coordinate with affected trades.

.2 Verify roof openings, curbs, pipes, sleeves, ducts, and vents through the roof are solidly set, reglets in place, and nailing strips located.

.3 Verify roofing termination and base flashings are in place, sealed, and secure.

.4 Do not proceed with the work until unsatisfactory conditions have been corrected to the satisfaction of the installer and the system manufacturer.

.5 Commencement of the installation will be construed as acceptance of the site conditions and, thereafter, the contractor shall be fully responsible for satisfactory work as specified herein.

3.02 PREPARATION

.1 Install starter and edge strips, and cleats before starting installation.

.2 Install surface mounted reglets true to lines and levels, and seal top of reglets with sealant.

.3 For assemblies where more than one length of flashing is required, confirm joint locations with the *Consultant* before starting work.

.4 Back paint concealed metal surfaces with the specified isolation coating to a minimum dry film thickness of 0.4 mm.

3.03 INSTALLATION

.1 Install sheet metal flashings at copings, walls, joints, roof openings and other components required to protect the membrane flashings as shown on the drawings, or otherwise required.

.2 Install continuous concealed hook strips at all exterior faces. Install cleats as required to protect membrane roofs and flashings from damage at lock joints and as required to permanently hold flashing in place. Secure cleats at 6” (152mm) on center in V-pattern, keeping lower fastener within 1.25” (32mm) of the drip edge.

.3 Sheet metal work shall be installed to cover the entire area it protects and shall be watertight under all service and weather conditions.

.4 Install in a uniform manner, level, true to line, free of dents, warping and distortion.

.5 Back-paint at the rate of ¼ Gal/100 ft2 (0.12L/m2) with bituminous paint, sheet metal that comes into contact with another kind of metal, masonry or concrete.

.6 Install sheet metal with concealed fasteners at lock joints. Exposed fastening will be permitted only with the approval of the *Consultant*. Space all fasteners evenly in an approved manner. Use lead plugs and screws where fasteners are exposed, otherwise use concrete drive fasteners where metal flashings are installed over concrete or masonry.

.7 Install underlay under sheet metal, installed directly over wood or masonry surfaces. Overlap joints 2" (51mm) and turn up 3" (76mm) at edges where horizontal surfaces intersect vertical planes.

.8 Join sheet metal by “S” lock seams, to permit thermal movement. Space joints evenly where exposed. Form inside and outside corners by means of raised seams. Lock seams to ensure water tightness. Do not use pop rivets.

.9 Slope all metal to interior to maintain minimum 8% slope. Do not form open joints or pockets that fail to drain water.

.10 Caulk all open sheet metal joints. Solder corners and other locations as required for a permanent waterproof connection.

.11 Where existing reglets can not be reused, provide new reglets sized minimum 3/8" (10mm) wide, 1" (25mm) deep and to suit site conditions.

.12 Clean reglets free of contaminates and dust.

.13 Wedge flashings into reglet joints with lead wedges at 9" (229mm) o.c. Set minimum ¼" (6mm) from masonry surface.

.14 At reglets wider than 3/8" (10mm) and deeper than ¾" (19mm) provide polyethylene rod, 25% wider than joint width. Caulk all reglets to provide a continuous waterproof seal. Use colour to match materials. Conform to manufacturer's latest printed recommendations for use of products being employed.

.15 Carry flashings out onto the roof minimum 3" (76mm).

.16 Prepare mock-up installations of metal flashing details for approval by *QA Observer* prior to installation of sheet metal flashings.

.17 Install sheet metal work to CRCA Roofing Specifications Manual except where otherwise detailed.

.18 Secure flashings in place using concealed fasteners, and use exposed fasteners only where permitted.

.19 Apply plastic cement compound between metal flashings and felt flashings.

.20 Fit flashings tight in place; make corners square, surfaces true and straight in planes, and lines accurate to profiles.

.21 Counterflash bituminous flashings at intersections of roof with vertical surfaces and curbs. Flash joints using S-lock forming tight fit over hook strips, except where otherwise shown.

.22 Lock end joints and caulk with sealant.

.23 Joints, seams and edges shall be formed, folded, locked and well caulked. Turn raw edges under to conceal them.

.24 Make provision for for expansion and contraction and execute all work using concealed fasteners.

.25 Caulk joints at cap flashing with sealant. Install a continuous strip of isobutyl tape between parapet and flashing membrane to stop windblown water.

.26 At intersections with wall surfaces provide and adequately fasten metal counter flashings over roofing membrane flashings. No counter flashing shall be installed until built-up base flashings have been inspected and accepted.

3.04 FINISH

.1 At project's conclusion, leave surface and adjacent work areas free of damage and clean of debris. Finished surfaces of formed metal flashings shall be free of oil canning, dents and be perfectly colour matched.

.2 Changes in colour between sheets and dented or oil canned surfaces that detract from the visual appearance of finished product will be rejected. Remove and replace damaged, defaced or defective work.

.3 Paint all exposed metal due to cutting.

.4 After erection touch-up finish surfaces damaged during handling and erection in conformance with manufacturer's recommendations. Refinish shop applied finishes as approved by *Consultant.*

.5 Remove deposits or protections and wash metals left unpainted and exposed to view as specified by metal manufacturer.

3.05 SITE QUALITY CONTROL

.1 See Division 01, General and Supplementary conditions of the *Contract* for site inspection requirements.

.2 Sheet metal work associated with the roofing installation will be subject to inspection by the Roofing Inspector. Refer to Section 07 52 16 - SBS Modified Bituminous Roofing

3.06 CLEANING

.1 Clean any drippage and spills of surplus sealant or plastic cement from adjacent surfaces.

.2 Daily as the work proceeds and on completion, remove all surplus materials and debris resulting from the foregoing work.

.3 Drag a magnetic bar across work area and grounds to ensure removal of all discarded fasteners and sharp metal debris.

.4 Remove all stains, caulking or other adhesive from all affected surfaces.

.5 Make good damage to other work caused by the work of this section.

END OF SECTION 07 62 00

This page intentionally left blank

SECTION 07 72 33
ROOF HATCHES *

PART 1 GENERAL

1.01 RELATED DOCUMENTS

.1 *Drawings* and general provisions of the *Contract,* including General and Supplementary Conditions and Division 01 *Specifications* sections, apply to this section.

1.02 SUMMARY OF WORK

.1 Work Included: The work of this section includes the provision of all labour, materials, equipment and *Services* required to supply and install roof hatches and accessories, as indicated on the *Drawings*, as specified herein and as required for a complete *Project.*

1.03 RELATED SECTIONS

.1 Section 05 50 00 - Metal Fabrications: Access ladder.
.2 Section 06 10 00 - Rough Carpentry: Rooftop nailers.
.3 Section 07 52 16 - SBS Modified Bituminous Roofing
.4 Section 07 62 00 - Sheet Metal Flashing and Trim.
.5 Section 07 92 00 - Joint Sealants.

1.04 REFERENCE STANDARDS

.1 ISO 9001 - Quality management systems -- Requirements; 2015.

1.05 DESIGN CRITERIA

.1 Climatic Data, including windloads and design temperatures in accordance with the applicable building code.
.2 The roof hatch to withstand climatic conditions, including snow load, wind uplift, and temperature without damage to the unit or permanent deformation to seals.
.3 The cover shall support a minimum live load of 195 kg/m^2 with a maximum deflection of 1/150th.
.4 The cover shall resist a minimum wind uplift force 684 kg/m^2.
.5 Operation of the cover shall be smooth and easy with controlled operation throughout the entire arc of opening and closing.
.6 Operation of the cover shall not be affected by temperature.

1.06 SUBMITTALS

.1 See Division 01, General and Supplementary conditions of the Contract., for submittal procedures.
.2 *Product* Data: Provide manufacturer's complete technical *Product* data for specified *Products.*
.3 *Shop Drawings:*
  .1 Indicate size and description of components, materials, attachment devices, description of frame and finish, and construction details.
  .2 The entire installation shall be designed by a structural engineer licensed to practise in the province of the *Project* location and who is experienced

in providing engineering *Services* of the kind indicated. Each of the *Shop Drawings* submitted shall bear the stamp and signature of the aforesaid structural engineer.

.4 Maintenance Data: Provide maintenance data for the roof hatch for incorporation into the operation and maintenance manual specified in Division 01, General and Supplementary conditions of the Contract.

1.07 QUALIFICATIONS

.1 The manufacturer shall be registered to ISO 9001 Quality Standards including in-house engineering for *Product* design activities.

1.08 PRODUCT HANDLING

.1 All materials shall be delivered in manufacturer’s original packaging.

.2 Store materials in a dry, protected, well-vented area.

1.09 JOB CONDITIONS

.1 Verify that related work to receive the roof hatch(s) is complete before installing the roof hatch(s).

.2 Mounting surfaces shall be straight and secure; substrates shall be of proper width.

.3 Refer to the *Contract Documents*, *Shop Drawings*, and manufacturer’s installation instructions.

.4 Coordinate the installation with the roofing Contractor and the roof membrane and roof insulation manufacturers' instructions.

.5 Observe all appropriate OSHA safety guidelines for this work.

1.10 WARRANTY

.1 For the work of this section, the warranty prescribed in Division 01, General and Supplementary conditions of the *Contract,* is extended to five (5) years provide a manufacturer's standard warranty.

.2 Warrant that materials shall be free of defects in material and workmanship for a period of five (5) years from the date of purchase. Should a part fail to function in normal use within this period, the Manufacturer shall furnish a new part at no charge to the Owner. Electrical motors, special finishes, and other special equipment (if applicable) shall be warranted separately by the manufacturers of those *Products.*

PART 2 PRODUCTS

2.01 MANUFACTURER

.1 This specification is based on roof hatches and accessories manufactured by the Bilco Company.

.2 Requests for *Substitutions* will be considered in accordance with the provisions of Division 01, General and Supplementary conditions of the *Contract.* Acceptance of alternative *Products* is subject to the approval of the *Consultant.*

2.02 ROOF HATCH

.1 Standard of acceptance: Bilco Model S-50TB, single leaf, thermally broken, ladder access type, size 914 mm x 762 mm (hinge side), preassembled by the manufacturer, as follows:

- .1 Entire hatch shall be insulated weathertight with fully welded corner joints on cover and curb.
- .2 Cover: Fabricated from 3 mm (11 ga) aluminum with a 127 mm beaded flange with formed reinforcing members.
  - .1 Heavy extruded EPDM rubber gasket bonded to the cover interior to assure a continuous seal when compressed to the top surface of the curb.
  - .2 Cover insulation: 76 mm thick fibreglass, fully covered and protected by a 1.2 mm (18 ga) aluminum liner.
- .3 Curb: Shall be 305 mm high, fabricated from 3 mm (11 ga) aluminum. The curb shall be formed with a 140 mm flange with 11.1 mm holes provided for securing to the roof deck. The curb shall be equipped with an integral metal capflashing of the same gauge and material as the curb, fully welded at the corners, that features the Bil-Clip® flashing system, including stamped tabs, 153 mm on centre, to be bent inward to hold single ply roofing membrane securely in place.
- .4 Curb insulation: Shall be rigid, polyisocyanurate of 75 mm thickness on outside of curb with a minimum R-Value of R-20.
- .5 Lifting mechanisms: Manufacturer shall provide compression spring operators enclosed in telescopic tubes to provide, smooth, easy, and controlled cover operation throughout the entire arc of opening and closing. The upper tube shall be the outer tube to prevent accumulation of moisture, grit, and debris inside the lower tube assembly. The lower tube shall interlock with a flanged support shoe welded to the curb assembly .
- .6 Hardware:
  - .1 Heavy stainless steel pintle hinges shall be provided
  - .2 Cover shall be equipped with a spring latch with interior and exterior turn handles
  - .3 Roof hatch shall be equipped with interior and exterior padlock hasps.
  - .4 The latch strike shall be a stamped component bolted to the curb assembly.
  - .5 Cover shall automatically lock in the open position with a rigid hold open arm equipped with a 25.4 mm dia. red vinyl grip handle to permit easy release for closing.
  - .6 Compression spring tubes shall be an anti-corrosive composite material and all other hardware shall be zinc plated and chromate sealed.
  - .7 Cover hardware shall be bolted into heavy gauge channel reinforcing welded to the underside of the cover and concealed within the insulation space.
  - .8 Finishes: Factory Finish shall be mill finish aluminum.

2.03 SAFETY RAILING SYSTEM

.1 Standard of acceptance: Bilco Model RL2-S fixed roof hatch safety railing system compliant with the applicable OSHA fall protection regulations, as follows:

.1 Posts and rails: 45 mm dia. schedule 40 pipe, 6061 T6 aluminum alloy.
.2 Curb mounting brackets and teardrop brackets fabricated from 6063-T5 aluminum extrusions.
.3 Locking mechanism: Cast aluminum.
.4 Spring hinges and fasteners: Type 316 stainless steel.
.5 Finish: Safety yellow powder coat.

PART 3 - EXECUTION

3.01 INSPECTION

.1 Verify that roof hatch installation will not disrupt other trades. Verify that the substrate is dry, clean, and free of foreign matter. Report and correct defects prior to any installation.
.2 Verify that site conditions are acceptable and are ready to receive work.
.3 Examine areas and conditions under which work is to be performed and notify the *Consultant* in writing of conditions detrimental to the proper and timely completion of the *Work.*
.4 Do not proceed with the *Work* until unsatisfactory conditions have been corrected to the satisfaction of the installer.
.5 Take field measurements to verify or supplement dimensions.
.6 Commencement of the installation will be construed as acceptance of the site conditions and, thereafter, the*Contractor* shall be fully responsible for satisfactory work as specified herein.

3.02 INSTALLATION:

.1 Install the roof hatch and the safety railing system in accordance with the reviewed and accepted *Shop Drawings* and the manufacturer's installation instructions.
.2 Locate units level, plumb, and in proper alignment with adjacent work.
  .1 Test units for proper function and adjust until proper operation is achieved.
  .2 Coordinate with Section 07 54 23 - Thermoplastic-Polyolefin (TPO) Roofing to ensure a watertight interface with the roofing membrane
  .3 Repair finishes damaged during installation to the satisfaction of the *Consultant*.
  .4 Replace items which cannot be satisfactorily restored at no additional cost to the *Owner.*

3.03 ADJUSTING AND CLEANING

.1 Clean exposed surfaces using methods acceptable to the manufacturer which will not damage finish.
.2 Remove from the premises all surplus material, dirt and debris caused by the work of this section and leave the installation clean.
.3 Make good damage to other work caused by the work of this section

END OF SECTION 07 72 33

SECTION 07 84 01
FIRESTOPPING

PART 1 GENERAL

1.01 RELATED DOCUMENTS

.1 *Drawings* and general provisions of the *Contract*, including General and Supplementary Conditions and Division 01 *Specifications* sections, apply to this section.

1.02 SUMMARY OF WORK

.1 Work Included:

.1 The work of this section includes the provision of all labour, materials, equipment and *Services* required to install firestopping and smoke seal materials, as indicated on the *Drawings*, as specified herein and as required for a complete *Project*.

1.03 RELATED REQUIREMENTS

.1 Cast-in-place Concrete - Refer to structural *Specifications*.

.2 Section 09 21 16 - Gypsum Board Assemblies.

.3 Section 07 81 00 - Applied Fireproofing.

.4 Section 07 84 00 - Firestopping (provided by mechanical consultant).

.5 Mechanical Specifications.

1.04 REFERENCE STANDARDS

.1 CAN/ULC S101 - Standard Methods of Fire Endurance Tests of Building Construction and Materials 2014.

.2 CAN/ULC S102 - Method of Testing for Surface Burning Characteristics of Building Materials and Assemblies 2018.

.3 CAN/ULC S114 - Test for Determination of Non Combustibility in Building Materials 2018.

.4 CAN/ULC S115 - Standard Method of Fire Tests of Firestop Systems 2018.

.5 CAN/ULC S702.1 - Standard for Mineral Fibre Thermal Insulation for Buildings, Part 1: Material Specification 2021.

.6 SMACNA (DCS) - HVAC Duct Construction Standards Metal and Flexible 2005 (Revised 2009).

.7 ULC (DIR) - Online Certifications Directory (Canada) Current Edition.

1.05 SUBMITTALS

.1 See Division 01, General and Supplementary conditions of the Contract, for submittal procedures.

.2 *Product* Data: Manufacturer's data sheets on each *Product* to be used, including:

.1 Preparation instructions and recommendations.

.2 Storage and handling requirements and recommendations.

.3 Installation methods.

.4 Manufacturers' material safety data sheets for the safe handling of materials and *Products* in accordance with Workplace Hazardous Materials Information System (WHMIS) requirements.

.3 Samples: Submit samples of each material or combination of materials proposed for use.

.4 Certification: Certify that *Products* installed meet or exceed specified requirements.

.5 Test Reports: Show compliance with specified test requirements; listing cards or sheets provided by ULC (DIR) will be considered sufficient substantiation; provide full reports from other agencies.

.6 Installer's Qualification Statement.

1.06 QUALITY ASSURANCE

.1 Installer Qualifications: Company specializing in performing the work of the type specified in this section with minimum three years of documented experience

1.07 DELIVERY, STORAGE, AND HANDLING

.1 Store *Products* in manufacturer's unopened packaging until ready for installation.

.2 Store *Products* under cover and elevated above grade in accordance with the manufacturer's instructions..

.3 Store and dispose of solvent-based materials, and materials used with solvent-based materials, in accordance with the requirements of the local authority having jurisdiction.

1.08 SITE CONDITIONS

.1 Maintain ambient conditions, such as temperature, humidity, and ventilation, within the limits recommended by the applicable manufacturer for optimum results, and do not install *Products* under conditions outside the manufacturer's absolute limits.

1.09 WASTE MANAGEMENT AND DISPOSAL

.1 Cooperate with the Waste Management Coordinator in the implementation of the Waste Management Plan specified in Division 01, General and Supplementary conditions of the Contract.

.2 Handle and dispose of waste materials generated by the work of this section in accordance with the waste management Plan.

PART 2 PRODUCTS

2.01 FIRESTOPPING AND SMOKE SEALS

.1 Provide fire stopping and smoke seal systems: in accordance with CAN/ULC S115, asbestos-free materials and systems capable of maintaining an effective barrier against flame, smoke and gases in compliance with requirements of CAN/ULC S115 and not to exceed opening sizes for which they are intended.

.2 Provide completed fire resistance rated assemblies identical in materials and construction to those tested and listed by ULC.

.3 The fire-resistance rating of the installed firestopping assembly shall not be less than the fire-resistance rating of the surrounding floor or wall assembly.

.4 All visible exposed firestopping to be white unless otherwise indicated on the *Drawings*.

.5 Service penetration assemblies: certified by ULC in accordance with CAN/ULC S115 and listed in ULC Guide No. 40 U19.

.6 Fire stopping and smoke seals at openings intended for ease of re-entry such as cables: elastomeric seal.

.7 Supplier responsible to provide alternate solution for firestopping material if requested by Authorities Having Jurisdiction.

2.02 BOARD FIREPROOFING

.1 Mineral fibre board fireproofing: Light weight, semi-rigid, asbestos-free, non-cementitious, completely inorganic boards complying with CAN/ULC S702.1 with thermal resistivity sufficient to perform acceptably in specified applications; capable of being field-installed using ordinary tools and screws or pins; and installed in accordance with the ULC design and required fire rating as indicated on the *Drawings*.

.1 Fire resistance at rated assemblies: Tested by an independent testing agency in accordance with CAN/ULC S101 for the specific hourly-rated assembly indicated.

.2 Thickness: As required to achieve the fire ratings indicated.

.3 Surface Burning Characteristics: Flame spread index of 0 (zero) when tested in accordance with CAN/ULC S102.

.4 Combustibility: Noncombustible, when tested in accordance with CAN/ULC S114.

.5 Surface Finish: None.

.6 Standard of acceptance: Rockwool *Products:*

.2 Fasteners: As required by the applicable fire rated design.

2.03 BLANKET FIREPROOFING

.1 Blanket Fireproofing: Flexible, completely inorganic, non-cementitious blankets with a thermal resistivity sufficient to perform acceptably in the specified applications; capable of being site-installed using ordinary tools.

.1 Thickness: As required to achieve the fire ratings indicated.

.2 Surface Burning Characteristics: Flame spread index of 5 or less, and smoke developed index of 0 (zero), maximum, when tested in accordance with CAN/ULC S102.

.3 Combustibility: Noncombustible, when tested in accordance with CAN/ULC S114.

.4 Density: 40 kg/cu m, minimum.

.5 Flexibility: Capable of being formed around corners and shapes by hand.

.6 Accommodation for duct cccess doors and panels: Capable of being installed to achieve the required fire rating without impeding access.

.7 Standard of acceptance: Rockwool *Products*

2.04 ACCESSORIES

.1 Fasteners: As required by the applicable fire rated design; non-combustible; use one or both of the following to attach fireproofing to ducts:

.1 Banding: Stainless steel banding clips.

.2 Insulation Pins: Copper-coated steel impalement pins, minimum 2.7 mm, for welded attachment, with galvanized steel self-locking washers, 38 mm

square or diameter; or equivalent sized cup-head pins.

.2 Access Panel Hardware: Galvanized threaded rods, sleeves, washers, and wing nuts as specified in the manufacturer's written instructions.

.3 Tape: Aluminum foil tape for sealing exposed fibre edges and repairing tears in facing.

.4 Firestopping: Material tested in conjunction with fireproofing, in accordance with CAN/ULC S115, to achieve a fire rated penetration seal at duct and other service penetrations through fire rated assemblies; of the same or greater fire rating than the rating of the penetrated assembly.

PART 3 EXECUTION

3.01 EXAMINATION

.1 Examine areas and conditions under which work is to be performed and notify the *Consultant i*n writing of conditions detrimental to the proper and timely completion of the *Work*.

.2 Verify that site conditions are acceptable and are ready to receive work.

.3 Do not begin installation until substrates have been properly prepared.

.4 Do not install until members and construction to be protected have been completed, ancillary work that needs to be covered by fireproofing has been completed, and the need for subsequent cutting and patching of fireproofing has been eliminated.

.5 Do not proceed with the *Work* until unsatisfactory conditions have been corrected to the satisfaction of the installer.

.6 Commencement of the installation will be construed as acceptance of the site conditions and, thereafter, the *Contractor* shall be fully responsible for satisfactory work as specified herein.

3.02 PREPARATION

.1 Clean surfaces thoroughly prior to installation.

.2 Prepare surfaces using the methods recommended by the manufacturer for achieving the best result for the substrate under the *Project* conditions.

.3 Maintain insulation around pipes and ducts penetrating the fire separation without interruption to the sheet vapour retarder.

.1 Seal the interface between the vapour retarder and the penetrating item.

.4 Mask where necessary to avoid spillage and over coating onto adjoining surfaces.

3.03 FIRE STOPPING AND SMOKE SEAL INSTALLATION

.1 Install fire stopping and smoke seals at service penetrations through fire resistive construction and at all locations where the continuity of fire resistive construction is interrupted, as indicated on the *Drawings*, as specified herein and as required for a complete *Project.*

.2 Install fire stopping and smoke seal material and components in accordance with the ULC certification and the manufacturer's instructions.

.3 Seal holes or voids made by through penetrations, poke-through termination devices, and unpenetrated openings or joints to ensure continuity and integrity of

the fire separation are maintained.

.4 Provide temporary forming as required and remove forming only after materials have gained sufficient strength and after initial curing.

.5 Tool or trowel exposed surfaces to a neat finish.

.6 Remove excess compound promptly as work progresses and upon completion.

3.04 BOARD FIREPROOFING INSTALLATION

.1 Minimize the amount of time that structural members are exposed without fireproofing.

.2 Install in strict accordance with the manufacturer's instructions, conditions of testing, and as indicated on the *Drawings*.

.3 Fasten fireproofing using insulation pins welded directly to the surface of thesubstrate or manufacturer's proprietary fasteners; do not use adhesives.

.4 Ensure that no gaps or cracks in fireproofing exist that would impair the fire resistance of separation.

.5 Coordinate with related fireproofing work.

.6 Finish exposed board with joint tape and joint compound covering fastener heads and accessories; apply a thin skim coat of joint compound over the entire surface; touch-up and sand to produce a smooth surface ready for decoration.

3.05 DUCT (BLANKET) FIREPROOFING INSTALLATION

.1 Install in strict accordance with manufacturer's instructions, conditions of testing, and as indicated on the *Drawings.*

.2 Install fireproofing on entire surface of ducts indicated, except where the *Contract Documents* explicitly indicate 3-sided or 2-sided installation.

.3 At penetrations of ducts through fire rated assemblies (walls, floors, roofs), extend fireproofing through the opening and seal the annular space between the fireproofing and the edge of the opening with firestopping.

.4 Fasten fireproofing to ducts using either banding or insulation pins welded directly to the surface of the duct; do not use adhesives.

.5 Install fireproofing over surfaces of supports and hangers unless hanger rods are at least 10 mm in diameter, spaced not more than 1500 mm o.c. along the length of the duct, and horizontal supports are at least 50 by 50 by 6 mm steel angle or an equivalent SMACNA (DCS) support system.

.6 Access Panels: Do not block access; install fireproofing so that the panel can be removed and reinstalled without damaging fireproofing.

.7 Seal cut edges and ends, and repair tears in facing using aluminum foil tape.

3.06 REVIEW

.1 Notify the *Consultant* when ready for review and prior to concealing or enclosing fire stopping materials and service penetration assemblies.

3.07 SCHEDULE

.1 Firestop and smoke seal at:

.1 Penetrations through fire-resistance rated masonry, concrete, and gypsum board partitions and walls.

.2 Top of fire-resistance rated masonry and gypsum board partitions.
.3 Intersection of fire-resistance rated masonry and gypsum board partitions.
.4 Control joints in fire- resistance rated masonry and gypsum board partitions and walls.
.5 Penetrations through fire-resistance rated floors, ceilings, and roofs.
.6 Around mechanical and electrical assemblies penetrating fire separations.
.7 Rigid ducts: greater than 129 cm^2: firestopping to consist of a bead of fire stopping material between a retaining angle and the fire separation and between the retaining angle and the duct, on each side of the fire separation.
.8 Between edge of floor slab and the exterior wall assembly at the building perimeter.
.9 In other locations where the continuity of a fire-resistant element is interrupted.
.10 In concealed cavities including exterior void pilasters.

3.08 INSPECTION AND LABELLING

.1 Do not enclose or cover fireproofing work until it has been inspected and accepted by the authority having jurisdiction.
.2 After completion of the installation, label major fireproofing surfaces with permanent red marking in words "Fire Resistant Barrier - Do Not Remove" or equivalent identification acceptable to the authority having jurisdiction (AHJ).

3.09 CLEANING

.1 As work progresses, remove excess materials and clean adjacent surfaces immediately after application.
.2 Remove temporary dams after initial set of fire stopping and smoke seal materials.
.3 Upon completion of the work of this Section:
  .1 Remove masking and temporary protection from adjacent surfaces.
  .2 Remove stains on adjacent surfaces and make good damage to adjacent surfaces caused by the work of this Section.
  .3 Remove from the premises all surplus material, dirt and debris caused by the work of this Section and leave the installation clean.

3.10 PROTECTION

.1 Avoid unnecessary exposure of fireproofing to abrasion and other damage likely to occur during subsequent construction operations.
.2 Minimize cutting and patching of fireproofing; repair or replace fireproofing removed to accomplish other work; maintain the required full thickness of fireproofing on support members and substrates.
.3 Protect installed *Products* until completion of the *Project.*
.4 Touch-up, repair or replace damaged *Products* before the date of *Ready-For-Takeover*.

END OF SECTION 07 84 01

SECTION 07 92 00
JOINT SEALANTS

PART 1 GENERAL

1.01 RELATED DOCUMENTS

.1 *Drawings* and general provisions of the *Contract,* including General and Supplementary Conditions and Division 01 *Specifications* sections apply to this section.

1.02 SUMMARY OF WORK

.1 *Work* Included: The work of this Section includes the provision of all labour, materials, equipment and *Services* required to execute joint sealant work, as indicated on the *Drawings*, as specified herein and as required for the proper completion of the work of all trades, as required for a complete *Project*.

.2 The Work includes:

.1 Self-levelling pourable joint sealants.

.2 Joint backings and accessories.

.3 The term "sealant" shall be interpreted as synonymous with the term "caulking" where used on the *Drawings* and/or in the *Specifications*.

1.03 RELATED REQUIREMENTS

.1 Section 07 21 19 - Spray-Applied Urethane Foam Insulation.

.2 Section 07 26 13 - Building Envelope Sheet Vapour Retarder **.

.3 Section 07 26 16 - Under-Slab Sheet Vapour Retarder **.

.4 Section 07 27 13 - Non-permeable Air/Moisture/Vapour Barrier **.

.5 Section 07 27 16 - Permeable Air/Moisture Barrier **.

.6 Section 07 52 16 - SBS Modified Bituminous Roofing

.7 Section 07 84 01 - Firestopping: Firestopping sealants.

.8 Section 08 11 13 - Hollow Metal Doors and Frames.

.9 Section 08 11 16 - Aluminum Doors and Frames.

.10 Section 08 51 13 - Aluminum Windows

.11 Section 08 71 10 - Door Hardware: Setting exterior door thresholds in sealant.

.12 Section 08 80 00 - Glazing: Glazing sealants and accessories.

.13 Section 09 21 16 - Gypsum Board Assemblies: Sealing acoustical and sound-rated walls and ceilings.

.14 Section 09 22 16 - Non-Structural Metal Stud Framing: Sealing between framing and adjacent construction in acoustical and sound-rated walls and ceilings.

.15 Section 09 30 13 - Ceramic Tiling: Sealant between tile and plumbing fixtures and at junctions with other materials and changes in plane.

1.04 REFERENCE STANDARDS

.1 ASTM C794 - Standard Test Method for Adhesion-In-Peel of Elastomeric Joint Sealants 2018 (Reapproved 2022).

.2 ASTM C834 - Standard Specification for Latex Sealants 2017.

.3 ASTM C919 - Standard Practice for Use of Sealants in Acoustical Applications 2022.

.4 ASTM C920 - Standard Specification for Elastomeric Joint Sealants 2018.

.5 ASTM C1087 - Standard Test Method for Determining Compatibility of Liquid-Applied Sealants with Accessories Used in Structural Glazing Systems 2016.

.6 ASTM C1193 - Standard Guide for Use of Joint Sealants 2016.

.7 ASTM C1248 - Standard Test Method for Staining of Porous Substrate by Joint Sealants 2022.

.8 ASTM C1330 - Standard Specification for Cylindrical Sealant Backing for Use with Cold Liquid-Applied Sealants 2018.

.9 ASTM D412 - Standard Test Methods for Vulcanized Rubber and Thermoplastic Elastomers—Tension 2016 (Reapproved 2021).

.10 ASTM D2240 - Standard Test Method for Rubber Property-Durometer Hardness 2015 (Reapproved 2021).

1.05 SUBMITTALS

.1 See Division 01, General and Supplementary conditions of the Contract for submittal procedures.

.2 *Product* Data for Sealants: Submit manufacturer's technical data sheets for each *Product* to be used, that includes the following:

.1 Priming and application procedures

.2 Verification that sealants are suitable for their locality, the purposes intended and the joint designs

.3 Verification that sealants will not stain the substrates or finished *Products*

.4 Limits of acceptatemperature and humidity conditions at the time of application

.5 Physical characteristics, including movement capability, VOC content, hardness, cure time, and colour availability.

.6 List of backing materials approved for use with the specific *Product*.

.7 Substrates that the *Product* is known to satisfactorily adhere to and with which it is compatible.

.8 Substrates the *Product* should not be used on.

.9 Substrates for which use of a primer is required.

.10 Substrates for which laboratory adhesion and/or compatibility testing is required.

.11 Installation instructions, including precautions, limitations, and recommended backing materials and tools.

.12 Sample warranty.

.13 Certification by the manufacturer indicating that the *Product* complies with specified requirements.

.3 Submit two copies of WHMIS MSDS Material Safety Data Sheets. Indicate VOC content for each *Product*.

.4 Upon completion, provide the specified manufacturers' material warranties for exterior sealants.

.5 *Product* data for accessory *Products:* Submit the manufacturer's technical data sheet for each *Product* to be used, including physical characteristics, limitations, installation instructions, and recommended tools.

.6 Samples:

.1 Colour cards for selection: Where the sealant colour is not specified, submit the manufacturer's colour cards showing standard colours available for selection.
.2 Samples for Verification: Where custom sealant colour is specified, obtain directions from *Consultant* and submit at least two physical samples for verification of colour of each required sealant.

.7 Test Reports: If requested by the *Consultant,* submit Laboratory test reports: and obtain the *Consultant's* acceptance prior to the start of installation.

.8 Installer's Qualification Statement.

1.06 QUALITY ASSURANCE

.1 Installer Qualifications: The work of this section shall be executed by an independent *Contractor* whose primary business is in the application of caulking and sealants, with at least three years of documented experience and using tradespersons skilled and trained in the techniques of caulking, and who are completely familiar with the published recommendations of the manufacturers of the caulking materials being used.

.1 Indication of lack of skill or defective work to be sufficient grounds for the *Consultant* to reject the installed caulking and to require its immediate removal and complete recaulking at no additional cost to the *Owner* during the warranty period.
.2 Cooperate with the *Consultant* and/or such inspection and testing agency the *Owner* or the *Consultant* may appoint.

.2 Compatibility

.1 Coordinate sealants used for the various building interior assemblies:

.1 Preferably, use one sealant of the same manufacturer throughout. If different sealants are selected, from those specified, it is the responsibility of the respective Section to ensure compatibility between selected sealant, substrates, and sealants of other Sections which come in contact with the selected sealant.
.2 If different sealants are used, it is the responsibility of the respective *Contractors* to ensure compatibility between selected sealants, substrates, and sealants of other sections which come in contact with the selected sealants.

.3 Preconstruction Laboratory Testing: Arrange for sealant manufacturer(s) to test each combination of sealant, substrate, backing, and accessories.

.1 Adhesion Testing: In accordance with ASTM C794.
.2 Compatibility Testing: In accordance with ASTM C1087.
.3 Stain Testing: In accordance with ASTM C1248; required only for stone substrates.
.4 Allow sufficient time for testing to avoid delaying the work.
.5 Deliver to the manufacturer sufficient samples for testing.
.6 Report the manufacturer's recommended corrective measures, if any, including primers or techniques not indicated in the *Product* data *Submittals*.
.7 Testing is not required if the sealant manufacturer provides data showing previous testing that shows satisfactory performance, including adhesion, lack of staining, and compatibility.

1.07 ENVIRONMENTAL AND SAFETY REQUIREMENTS

.1 Comply with requirements of Workplace Hazardous Materials Information System (WHMIS) regarding use, handling, storage, and disposal of hazardous materials; and regarding labelling and provision of material safety data sheets acceptable to Labour Canada.

.2 Subject to compliance with other specified requirements, select low-odour, non-carcinogenic *Products* in all locations for which such *Products* are available.

.3 Conform to the manufacturer's recommended temperatures, relative humidity, and substrate moisture content for application and curing of sealants, including special conditions governing their use.

.1 Do not apply sealants when the temperature of the sealant and the materials to which it is applied is below the manufacturer's recommended application temperature.

.2 Should it become necessary to apply sealants when the temperature is below the manufacturer's recommended temperature, consult the sealant manufacturer and follow their recommendations.

1.08 DELIVERY, STORAGE, AND HANDLING

.1 Deliver and store materials in original wrappings and containers with manufacturer's seals and labels, intact.

.2 Store materials in strict accordance with the manufacturer's recommendations. Protect from moisture, water and contact with the ground or floor.

.3 Maintain ttemperature below 32°C in the storage area.

1.09 WASTE MANAGEMENT AND DISPOSAL

.1 Cooperate with the waste management coordinator in the implementation of the waste management plan specified in Division 01, General and Supplementary conditions of the Contract.

.2 Handle and dispose of waste materials generated by the work of this section in accordance with the waste management plan.

1.10 WARRANTY

.1 For the work of this section, the warranty period specified in Division 01, General and Supplementary conditions of the *Contract* is extended to

.1 Correct defective work within a five (5) year period after Date of *Ready-For-Takeover*.

.2 In addition to the 5-year warranty specified above, provide a manufacturer's warranty for silicone sealants for a period of twenty (20) years.

.3 Warrant that caulking work will not leak, crack, crumble, melt, shrink, bubble, run, lose adhesion or stain adjacent surfaces.

.4 Warranty: Include coverage for installed sealants and accessories that fail to achieve watertight seal , exhibit loss of adhesion or cohesion, or do not cure.

PART 2 PRODUCTS

2.01 SEALANTS

.1 Sealant Type A: Paintable siliconized acrylic latex sealant to ASTM C834:

.1 Applications: Around interior door frames and windows, against drywall and where acoustical sealant exposed to sight is called for.
.2 Standard of acceptance: Tremflex 834 paintable siliconized acrylic latex sealant.

.2 Sealant Type B: Ultra-low modulus, one-part, neutral cure silicone sealant for extreme movement joints to ASTM C920, Type S, Grade NS, Sealant Class100/50, Use T,NT, M, G, A, O.:
.1 Applications: Exterior joint work, interior and exterior masonry control joints, and where extreme movement is anticipated.
.2 Movement capacity: +100%; -50%.
.3 Properties:
.1 No primer required on concrete
.2 Non-staining
.3 Good unprimed adhesion to most substrates (fluoropolymer coatings, polyethylene-faced modified bituminous membrane, etc.)
.4 Standard of acceptance: Dow Corning 790 silicone building sealant.

.3 Sealant Type C: One-part, neutral cure silicone sealant to ASTM C920, Type S, Grade NS, Class 50, Use NT, M, G, A:
.1 Application: Exterior joint work where not otherwise indicated. The manufacturer to advise whether to use Type C or Type D for the specific application.
.2 Movement capacity: ±50%.
.3 Limited colour range.
.4 Standard of acceptance: Dow Corning 791 silicone weather proofing sealant.

.4 Sealant Type D: One-part, neutral cure, medium modulus, architectural grade silicone sealant to ASTM C920, Type S, Grade NS, Class 50, Use NT, G, A:
.1 Application: Exterior joint work where not otherwise indicated. The manufacturer to advise whether to ues Type C or Type D for the specific application.
.2 Movement capacity: ±50%.
.3 Standard of acceptance: Dow Corning 795 silicone building sealant.

.5 Sealant Type E: One part, acetoxy-cure, mildew-resistant silicone sealant for non-porous substrates:
.1 Applications: Caulking countertops at wall, ceramic tile, plumbing fixtures, and in wet areas where not otherwise indicated.
.2 Movement capacity: +25%.
.3 Standard of acceptance: Dow Corning tub, tile and ceramic silicone sealant.

.6 Sealant type F: Flexible synthetic rubber acoustical sealant:
.1 Application: Acoustical sealant in concealed locations.
.2 Standard of acceptance: Tremco acoustical sealant.

.7 Colour of sealants: Selected from the manufacturer's complete colour range to match adjacent materials, to the approval of the *Consultant.*

.8 Joint cleaner: xylol, methylethyleketon, IPA, or non-corrosive type recommended by sealant manufacturer and compatible with joint forming materials.

2.02 JOINT SEALANT APPLICATIONS

.1 Scope:

.1 Exterior Joints: Seal open joints, whether or not the joint is indicated on *Drawings*, unless specifically indicated not to be sealed. Exterior joints to be sealed include, but are not limited to, the following items.

.1 Wall expansion and control joints.

.2 Joints between door, window, and other frames and adjacent construction.

.3 Joints between different exposed materials.

.4 Other joints indicated below.

.2 Interior Joints: Do not seal interior joints unless specifically indicated to be sealed. Interior joints to be sealed include, but are not limited to, the following items.

.1 Joints between door, window, and other frames and adjacent construction.

.2 In sound-rated wall and ceiling assemblies, gaps at electrical outlets, wiring devices, piping, and other openings; between wall/ceiling and other construction; and other flanking sound paths.

.1 Exception: Through-penetrations in sound-rated assemblies that are also fire-rated assemblies; these openings are to be firestopped.

.3 Other joints indicated below.

.3 Do not seal the following types of joints.

.1 Joints indicated to be treated with a manufactured expansion joint cover or some other type of sealing device.

.2 Joints where sealant is specified to be provided by the manufacturer of the *Product* to be sealed.

.3 Joints where the installation of sealant is specified in another section.

.4 Joints between suspended panel ceilings/grid and walls.

.2 Sound-Rated Assemblies: Walls and ceilings identified as "STC-rated", "sound-rated", or "acoustical".

.3 For interior applications provide *Products* with a maximum volatile organic compound (VOC) content of 250 g/L.

2.03 ACCESSORIES

.1 Backer Rod: Cylindrical cellular foam rod with surface that sealant will not adhere to, compatible with the specific sealant used, and recommended by the backing and sealant manufacturers for the specific application.

.1 Type for Joints Not Subject to Pedestrian or Vehicular Traffic: ASTM C1330; Type O - Open-Cell Polyurethane.

.2 Type for Joints Subject to Pedestrian or Vehicular Traffic: ASTM C1330; Type B - Bi-Cellular Polyethylene.

.3 Closed-Cell and Bi-Cellular: 25 to 33 percent larger in diameter than joint width.

.2 Preformed Extruded Silicone Joint Seal: Pre-cured low-modulus silicone extrusion, in sizes to fit applications indicated on the *Drawings,* combined with a

neutral-curing liquid silicone sealant for bonding the joint seal to substrates.

.1 Size: 25.4 mm wide, in rolls 30.5 m long.

.2 Thickness: 19.8 mm, with ridges along outside bottom edges for bonding area.

.3 Colour: As selected by the *Consultant*.

.4 Durometer Hardness, Type A: 26 to 32, minimum, when tested in accordance with ASTM D2240.

.5 Tensile Strength: 1.5 MPa, in accordance with ASTM D412.

.6 Elongation at Break: 554 percent, in accordance with ASTM D412.

.3 Backing Tape: Self-adhesive polyethylene tape with surface that sealant will not adhere to and recommended by the tape and sealant manufacturers for the specific application.

.4 Masking Tape: Self-adhesive, nonabsorbent, non-staining, removable without adhesive residue, and compatible with surfaces adjacent to joints and sealants.

.5 Joint Cleaner: Non-corrosive and non-staining type, type recommended by the sealant manufacturer; compatible with joint forming materials.

.6 Primers: Type recommended by the sealant manufacturer to suit the specific application; non-staining.

.7 Joint fillers: Chemically compatible with primers and sealants, outsized 30 to 50%, type recommended by the sealant manufacturer for each specific application.

PART 3 EXECUTION

3.01 EXAMINATION

.1 Examine areas and conditions under which the work is to be performed and notify the Consultant in writing of conditions detrimental to the proper and timely completion of the *Work.*

.2 Verify that joints are ready to receive work.

.3 Verify that backing materials are compatible with sealants.

.4 Verify that backer rods are of the correct size.

.5 For exterior sealants, arrange for a technical representative of the manufacturer to conduct adhesion tests for each joint condition and to make recommendations with respect to sealant type, primers (if required) and joint preparation. Do not deviate from the manufacturer's recommendations without prior written approval.

.6 Do not proceed with the *Work* until unsatisfactory conditions have been corrected to the satisfaction of the installer.

.7 Commencement of the work of this Section will be construed as acceptance of the site conditions and, thereafter, the *Contractor* shall be fully responsible for satisfactory work as specified herein.

3.02 PREPARATION

.1 Before application of any sealant, confirm that the sealant material is compatible with the materials and finishes of the surfaces to which the sealant is applied or is in contact with.

.2 Remove loose materials and foreign matter that could impair adhesion of sealant.

.3 Clean joints, and prime as necessary, in accordance with manufacturer's instructions.

.4 Perform preparation in accordance with manufacturer's instructions and ASTM C1193.

.5 Mask elements and surfaces adjacent to joints to protect from damage and disfigurement due to sealant work; be aware that sealant drips and smears may not be completely removable.

.6 Remove oil, grease and other coatings from non-ferrous metals with joint cleaner.

.7 Prepare concrete, masonry, glazed and vitreous surfaces to the sealant manufacturer's instructions.

.8 Measure joint dimensions and size joint backers to achieve width-to-depth ratio, neck dimension, and surface bond area as recommended by manufacturer, except where specific dimensions are indicated.

.1 Install joint filler to achieve the correct joint depth and shape with approximately 30% compression.

.2 Where not otherwise indicated or recommended by the manufacturer, install joint backers to achieve the following ratios:

.1 Width/depth ratio of 2:1.

.2 Neck dimension no greater than 1/3 of the joint width.

.9 Where necessary to prevent staining, mask adjacent surfaces prior to priming and caulking.

.10 Apply bond breaker tape where required to the manufacturer's instructions.

.11 Use primers where recommended by the sealant manufacturer. Prime the sides of joints to sealant manufacturer's instructions immediately prior to caulking.

3.03 INSTALLATION

.1 Apply sealants in accordance with ASTM C1193 and the manufacturer's printed directions for preparation of surfaces and material installation:

.1 Use a gun with the proper size nozzle.

.2 Use sufficient pressure to fill voids and joints solid. Superficial pointing with skin bead is not acceptable.

.3 Form the surface of the sealant with a full bead, smooth, free from ridges, wrinkles, sags, air pockets, embedded impurities. Neatly tool the surface to a slight concave joint.

.2 Apply acoustical sealant in accordance with ASTM C919.

.3 Measure joint dimensions and size joint backers to achieve width-to-depth ratio, neck dimension, and surface bond area as recommended by manufacturer, except where specific dimensions are indicated. Where not otherwise indicated or otherwise recommended by the sealant manufacturer:

.1 Concrete or masonry joints shall be a minimum of 6 mm wide x 6 mm deep. Depth shall be equal to width in joints up to 12 mm wide. For joints 12 mm to 25 mm wide, depth shall be 12 mm.

.2 For joints in metal, glass and other non-porous surface, sealant depth shall be a minimum of 1/2 the applied sealant width, and shall in no case exceed the applied sealant width.

.4 Install bond breaker backing tape where backer rod cannot be used.

.5 Install sealant free of air pockets, foreign embedded matter, ridges, and sags, and without getting sealant on adjacent surfaces.

.6 Do not install sealant when ambient temperature is outside manufacturer's recommended temperature range, or will be outside that range during the entire curing period, unless the manufacturer's approval is obtained and instructions are followed.

.7 Nonsag Sealants: Tool surface to a concave profile, unless otherwise indicated; remove masking tape immediately after tooling the sealant surface.

.8 Cure sealants in accordance with manufacturer's instructions. Do not cover up sealant until curing is complete and proper seal has been achieved.

.9 Concrete Floor Joint Filler: After full cure, shave joint filler flush with top of concrete slab.

3.04 SEALANT APPLICATION

.1 Apply caulking around the perimeter of every external wall opening, both sides; set exterior door thresholds in a continuous bead of sealant.

.2 Apply sealant to all exposed control joints in masonry, concrete, and gypsum board walls, ceilings, and bulkheads, joints between adjacent building components.

.3 Provide interior caulking in walls, floor finishes around all metal frames, door frames, access panels, built-in specialties; around pipes, ducts, grilles, outlet boxes, conduits, etc. penetrating floors, walls and ceiling.

.4 Apply siliconized acrylic latex caulking around wood trim and wipe smooth prior to painting.

.5 Caulk solidly around both outside and inside of all window/wall and door/wall joints, horizontal and vertical window and door surrounds, and all other exterior trim, to provide a weathertight seal and prevent condensation.

.6 Caulk the connection between the tops of the concrete block walls and the underside of the steel deck, wherever exposed to sight.

.7 Caulk around plumbing fixtures, base and rim of sinks with mildew resistant sealant.

.8 Supply and install paintable sealant around all piping to sinks and lavatories where piping passes through walls.

3.05 PREFORMED FOAM SEALANT INSTALLATION

.1 Install preformed foam sealant in joints where indicated, in accordance with the manufacturer's printed instructions.

.2 Verify dimensions on site and take particular care to select the correct size preformed sealant for the joint.

.3 Install sealant to a clean line, flush with adjacent surfaces, and filling the joint, without interruption, for its entire length.

3.06 CLEANING

.1 Upon completion of the work of this Section remove from the premises all surplus material, dirt and debris caused by the work of this Section and leave the installation clean.

.2 Clean any drippage or spills of sealant or primers from adjacent surfaces immediately and make good any damage caused by the work of this Section, using cleaners recommended by the manufacturer, as work progresses.

.3 Remove masking tape after tooling of joints.

3.07 MANUFACTURER'S WARRANTY INSPECTION

.1 Upon completion, arrange for inspection of exterior sealant work by a technical representative of the sealant manufacturer.

.2 Correct any deficiencies.

.3 Arrange for the issuance of the manufacturer's 20-year materials warranty for exterior sealants.

END OF SECTION 07 92 00

SECTION 08 11 13
HOLLOW METAL DOORS AND FRAMES

PART 1 GENERAL

1.01 RELATED DOCUMENTS

.1 *Drawings* and general provisions of the *Contract*, including General and Supplementary Conditions and Division 01 *Specifications s*ections, apply to this section.

1.02 SUMMARY OF WORK

.1 *Work* Included: The *Work* of this Section includes the provision of all labour, materials, equipment and *Services* required to supply and install hollow metal doors and frames, as indicated on the *Drawings*, as specified herein and as required for a complete *Project.*

.2 The *Work* includes:

- .1 Non-fire-rated hollow metal doors and frames.
- .2 Fire-rated hollow metal doors and frames.
- .3 Thermally insulated hollow metal doors with frames.
- .4 Hollow metal glazing frames.
- .5 Accessories.

1.03 RELATED REQUIREMENTS

.1 Section 04 20 00 - Unit Masonry.
.2 Section 07 21 19 - Spray-Applied Urethane Foam Insulation.
.3 Section 07 92 00 - Joint Sealants.
.4 Section 08 14 16 - Flush Wood Doors.
.5 Section 08 71 10 - Door Hardware.
.6 Section 08 80 00 - Glazing: Glass for doors and borrowed lites.
.7 Section 09 21 16 - Gypsum Board Assemblies.
.8 Section 09 22 16 - Non-Structural Metal Stud Framing.
.9 Section 09 91 00 - Painting *.

1.04 ABBREVIATIONS AND ACRONYMS

.1 CSDMA - Canadian Steel Door Manufactures Association
.2 NFPA - National Fire Protection Association.
.3 ULC - Underwriters Laboratories of Canada.

1.05 REFERENCE STANDARDS

.1 ASTM A653/A653M - Standard Specification for Steel Sheet, Zinc-Coated (Galvanized) or Zinc-Iron Alloy-Coated (Galvannealed) by the Hot-Dip Process 2020.

.2 ASTM A1008/A1008M - Standard Specification for Steel, Sheet, Cold-Rolled, Carbon, Structural, High-Strength Low-Alloy, High-Strength Low-Alloy with Improved Formability, Solution Hardened, and Bake Hardenable 2021a.

.3 ASTM A1011/A1011M - Standard Specification for Steel, Sheet and Strip, Hot-Rolled, Carbon, Structural, High-Strength Low-Alloy, High-Strength Low-Alloy

with Improved Formability, and Ultra-High Strength 2018a.

.4 ASTM E90 - Standard Test Method for Laboratory Measurement of Airborne Sound Transmission Loss of Building Partitions and Elements 2009 (Reapproved 2016).

.5 ASTM E413 - Classification for Rating Sound Insulation 2022.

.6 ASTM E1332 - Standard Classification for Rating Outdoor-Indoor Sound Attenuation 2022.

.7 CAN/ULC S104 - Standard Method for Fire Tests of Door Assemblies 2010.

.8 CAN/ULC S105 - Standard Specification for Fire Door Frames Meeting the Performance Required by CAN/ULC S104 2016.

.9 CSA B651 - Accessible Design for the Built Environment 2018.

.10 CSA W59 - Welded Steel Construction 2018.

.11 CSDMA Commercial Steel Doors and Frames - Canadian Steel Door Manufacturers Association Commercial Steel Doors and Frames Recommended Specification 2009.

.12 CSDMA Storage and Installation Guide - Guide Specification for Installation and Storage of Hollow Metal Doors and Frames 2012.

.13 MPI (APL) - Master Painters Institute Approved Products List; Master Painters and Decorators Association Current Edition.

.14 NFPA 80 - Standard for Fire Doors and Other Opening Protectives 2016.

.15 NFPA 105 - Standard for Smoke Door Assemblies and Other Opening Protectives 2016.

.16 NFPA 252 - Standard Methods of Fire Tests of Door Assemblies 2018.

.17 ULC (DIR) - Online Certifications Directory (Canada) Current Edition.

1.06 REQUIREMENTS OF REGULATORY AGENCIES

.1 Steel fire rated doors and frames: labelled and listed by an organization accredited by Standards Council of Canada in conformance with CAN/ULC S104 and CAN/ULC S105 for ratings specified or indicated.

.2 The *Work* of this section shall conform to the requirements of the applicable building code, NFPA 80 , and all other applicable codes and regulations, to the satisfaction of the authorities having jurisdiction.

.3 Accessibility: Comply with CSA B651

.4 Combined Requirements: If a particular door and frame unit is indicated to comply with more than one type of requirement, comply with the specified requirements for each type; for instance, an exterior door that is also indicated as being sound-rated must comply with the requirements specified for exterior doors and for sound-rated doors; where two requirements conflict, comply with the most stringent.

1.07 SUBMITTALS

.1 See Division 01, General and Supplementary conditions of the Contract for submittal procedures.

.2 *Product* Data:

.1 Provide complete manufacturer's technical *Product* data.
.2 Include manufacturer's published installation instructions, including any special installation instructions relating to this *Project.*

.3 *Shop Drawings*:
.1 Indicate each type of door, size, material, steel core thicknesses, mortises, reinforcements, reinforcement type and locations, anchorage and fastening methods, location of exposed fasteners, glazed openings, arrangement of hardware, and fire rating where applicable.
.1 Indicate each type frame, elevation, profile, material, core thickness, reinforcements, glazing stops, location of anchors, and finishes.
.2 Include a schedule which identifies each unit, with door marks and numbers which clearly correspond to the room numbering system used on the architectural *Drawings*.

.4 Manufacturer's Certificate: Certification that *Products* meet or exceed specified requirements.

.5 Manufacturer's Qualification Statement.

1.08 QUALITY ASSURANCE

.1 Manufacturer Qualifications:
.1 Company specializing in manufacturing *Products* specified in this section, with not less than five years documented experience.
.2 Member in good standing of the Canadian Steel Door Manufacturers Association (CSDMA).

.2 Obtain hollow metal doors and frames from single source of supply and from a single manufacturer, and as follows:
.1 Fabricate the *Work* of this section to meet the requirements of CSDMA Commercial Steel Doors and Frames as a minimum and as further modified in this section.

.3 Testing Agencies: Provide doors produced under the label service program of a testing agency acceptable to the authorities having jurisdiction, and as follows:
.1 Steel Fire Rated Doors and Frames: Labelled and listed by an organization accredited by the Standards Council of Canada for the ratings specified or indicated.
.1 Provide fire labelled frames where indicated, as follows:
.1 Listed by nationally recognized agency having a factory inspection service and constructed as detailed in the follow up service procedures/factory inspection manuals issued by the listing agency to individual manufacturers.
.2 Fabricate all fire rated doors, frames and screens in accordance with the labelling authority standard.
.2 Affix the appropriate label to each rated opening, indicating compliance with the labelling requirement indicated on the *Drawings.*

1.09 DELIVERY, STORAGE, AND HANDLING

.1 Deliver doors and frames to the *Project* site.

.2 Provide protection during transit and site storage to prevent distortion or indentation, and additional protection as required to prevent damage to the finish of doors and frames.
  .1 Protect with resilient packaging; avoid humidity build-up under coverings; prevent corrosion and adverse effects on factory applied painted finish.
  .2 Inspect doors and frames on delivery for damage, and notify shipper and *Supplier* if damage is found.
    .1 Minor damages may be repaired provided refinished items match new work and are acceptable to the *Consultant*.
    .2 Remove and replace damaged items that cannot be repaired as directed by the *Consultant*, at no additional cost to the *Owner*.

1.10 WASTE MANAGEMENT AND DISPOSAL

.1 Cooperate with the Waste Management Coordinator in the implementation of the Waste Management Plan specified in Division 01, General and Supplementary conditions of the Contract.

.2 Handle and dispose of waste materials generated by the Work of this section in accordance with the waste management plan.

PART 2 PRODUCTS

2.01 MANUFACTURERS

.1 Subject to compliance with the *Specifications* requirements, manufacturers offering products by the following companies are acceptable:
  .1 Hollow Metal Doors and Frames:
    .1 Artek Door Ltd..
    .2 Baron Steel Doors and Frames.
    .3 Daybar.
    .4 Fleming Door Products

2.02 STEEL

.1 Steel used for fabrication of doors and frames: Commercial Steel (CS) Type B in compliance with one or more of the following requirements:
  .1 Galvannealed steel complying with ASTM A653/A653M.
  .2 Cold-rolled steel complying with ASTM A1008/A1008M
  .3 Hot-rolled pickled and oiled (HRPO) steel complying with ASTM A1011/A1011M

.2 Except where otherwise noted or otherwise required for fire or sound rated doors, minimum base steel thicknesses shall be as follows:
  .1 Frames: 1.6 mm (16 ga).
  .2 Door Faces:
    .1 Exterior doors: 1.6 mm (16 ga).
    .2 Interior doors: 1.2 mm (18 ga).
  .3 Top and bottom end closure channels: 1.2 mm (18 ga).

.3 Reinforcements:
  .1 Lock and strike reinforcements: 1.6 mm (16 ga).
  .2 Hinge reinforcements: 3.4 mm (10 ga).
  .3 Flush bolt reinforcements: 1.6 mm (16 ga).
  .4 Door closer and holder reinforcements: 2.7 mm (12 ga).

2.03 ACCESSORIES

.1 Glazing: As specified in Section 08 80 00 - Glazing.

.2 Astragals for Double Doors: Specified in Section 08 71 10 - Door Hardware.

.3 Anchors: as required to suit each specific condition.

.4 Mechanical Fasteners for concealed metal-to-metal connections: Self-drilling, self-tapping, steel with electroplated zinc finish.

.5 Silencers: Resilient rubber, fitted into drilled hole; provide three on the strike side of a single door, three on the centre mullion of pairs, and two on the head of pairs without centre mullions.

.6 Temporary frame spreaders for factory- or shop-assembled frames.

.7 Touch-up primer for galvanized steel sheet: Inorganic zinc-rich primer to MPI (APL) #19.

.8 Other components: Provide other door and frame components in accordance with CSDFMA requirements.

2.04 FABRICATION - GENERAL

.1 Fabricate doors and frames as detailed, to Canadian Steel Door and Frame Manufacturers' Association, (CSDFMA) Canadian Manufacturing Specifications for Steel Doors and Frames, except where specified otherwise. Reinforce door and frames to suit hardware requirements specified in Section 08 71 10 - Door Hardware.

.2 Execute weldingWeld in accordance with CSA W59.

.3 Blank, reinforce, drill and tap doors and frames for mortised hardware. Reinforce doors and frames for surface mounted hardware.

.4 Specified reinforcement is the minimum requirement. Provide additional reinforcement where required to ensure a permanent, rigid, trouble-free installation able to withstand the stresses of heavy usage.

.5 Cut, shear, straighten and work the steel in a manner which will prevent disfigurement of the finished *Work*.

.6 Punch frames for rubber door bumpers.

.7 Fill seams and joints and weld depressions with epoxy metal filler, disk-sand to a smooth, flat, uniform, scratch-free surface, with all arrises sharp and true-to-line. Ream drilled and punched holes and remove all burrs.

.8 Finished *Work* shall be free of warp, open seams, buckles, weld and grind marks and other surface defects detrimental to the production of a good paint finish.

.9 Conceal all fastenings except those required for loose glazing stops.

.10 Provide fire labelled doors and frames where indicated. Fire rated doors and frames shall be identical to those tested in accodance with CAN/ULC S104 or NFPA 252 and listed by an agency acceptable to the authorities having jurisdiction.

.1 Construct doors and frames as detailed in Follow-Up Service Procedures/Factory Inspection Manuals issued by the listing agency to individual manufacturers.

.2 Attach ULC labels to doors and frames where applicable.

.11 Smoke and draft control doors: Self-closing or automatic closing doors in accordance with NFPA 80 and NFPA 105 , with a fire-resistance-rating in accordance with the applicable building code requirements for the fire resistance rating of the wall construction doors, and the following:

.1 Maximum Air Leakage: 0.02 cu m/sec/sq m of door opening at 24.9 Pa pressure, when tested in accordance with UL 1784 at both ambient and elevated temperatures.

.2 Gasketing: Provide gasketing or edge sealing as necessary to achieve leakage limit.

.3 Label: Include the "S" label on fire-rating label of door.

.12 Finishes:

.1 Zinc Coating: Provide metal components zinc-coated (galvanized) and/or zinc-iron alloy-coated (galvannealed) in accordance with ASTM A653/A653M, with manufacturer's standard coating thickness, except where otherwise indicated.

.2 Remove weld slag and splatter from exposed surfaces.

.3 Fill and sand smooth tool marks, abrasions, and surface blemishes to present smooth uniform surfaces.

.4 Primer: Shop apply zinc rich primer to repair damaged zinc coatings arising from fabrication; cure primer fully before shipping to site; include compatible primer for site finishing and correction of surface abrasions to zinc coatings and factory applied primer.

2.05 FABRICATION OF DOORS

.1 Doors shall be swing-type, flush, with provision for glass and/or louvre openings as indicated.

.2 Door Thickness: 45mm nominal except where otherwise indicated..

.3 Exterior and interior doors and transom panels to be hollow steel construction.

.1 Form each face sheet for exterior and interior doors from a single steel sheet.

.2 Exterior doors to be thermally broken.

.1 Reinforce exterior doors with vertical stiffeners, securely welded to each face sheet at 150 mm o.c. maximum.

.2 Fill voids between stiffenerswith polystyrene or polyisocyanurate core laminated under pressure to each face sheet.

.3 Door Thermal Resistance: RSI-Value in accordance with OBC SB-10 requirements.

.3 Interior doors to be stiffened and sound deadened with honeycomb core laminated under pressure to each face sheet.

.4 Sound-Rated Interior Doors:

.1 Sound transmission cass (STC) rating of door and frame assembly: STC of 50, minimum, calculated in accordance with ASTM E413, and tested in accordance with ASTM E90.

.2 Door Core Material: Manufacturer's standard construction as required to meet acoustic requirements indicated.

.3 Sound Seals: Refer to Section 08 71 10 - Door Hardware.

.4 Opening Force of Sound-Rated Doors, Non-Fire Rated: In compliance with CSA B651.

.4 Make provision for glazing as indicated and provide the following:

.1 Channel formed glazing stop, 16 mm high, welded in place on secure side.

.2 Screw fixing with countersunk oval head sheet metal screws on non-secure side.

.5 Make cut-outs to receive louvres.

.6 Weld longitudinal edges and close top and bottom with spot welded channel closures.

.1 Closures to be flush with edges, welded and seam-filled for all exterior doors and interior doors with electronic contacts

.2 Grind welded joints to a flat plane, fill with metallic paste filler and sand to a uniform smooth finish.

.7 Door Edge Profile: Manufacturers standard for the specific application.

.1 Bevel the opening edge of the door to provide clearance for a tighter fit in the frame.

.8 Provide reinforcement and drill holes in the locations and diameters required in accordance with hardware requirements and templates. Refer to Section 08 71 10 - Door Hardware.

2.06 FABRICATION OF FRAMES

.1 Frames to be manufactured by the same manufacturer as the doors.

.2 Frames to be continuously welded construction. Spot welded or knockdown frames are acceptable only within suites.

.3 Ensure depth of frames are coordinated to suit depth of wall thickness.

.4 Exterior frames shall be thermally broken with minimum 6 mm neoprene spacer mechanically interlocked with the inner and outer portions of the frames to form a single rigid assembly.

.5 Cut mitres and joints accurately and weld continuously on the inside of the profile; accurately cope and securely weld butt joints of mullions, transom bars, centre rails and sills.

.6 Grind welded joints to a flat plane, fill with metallic paste filler and sand to a uniform smooth finish.

.7 Conceal fastenings except where exposed fastenings are indicated.

.8 Blank, mortise, reinforce, drill and tap frames and reinforcements to receive hardware using templates provided by finish hardware *Supplier*. Refer to Section 08 71 10 - Door Hardware.

.9 Protect mortise cutouts with steel guard boxes.

.10 Protect strike and hinge reinforcements using guard boxes welded to frames.

.11 Reinforce the head of frames wider than 1200 mm.

.12 Securely attach floor anchors to the inside of each jamb profile.

.13 Weld in two temporary jamb spreaders per frame to maintain proper alignment during shipment.

.14 Provide for appropriate anchorage to floor and wall construction.

.1 Locate each wall anchor immediately above or below each hinge reinforcement on the hinge jamb and directly opposite on the strike jamb. For rebate opening heights up to and including 1520 mm, provide two anchors, and an additional anchor for each additional 760 mm of height or fraction thereof, except as indicated below.

.2 For rebate opening heights up to and including 1520 mm, provide two anchors, and an additional anchor for each additional 760 mm of height or fraction thereof, except as indicated below.

.3 For frames in previously placed concrete, provide anchors located not more than 150 mm from the top and bottom of each jamb, and intermediate anchors at 660 mm on centre maximum.

.15 Provide single stud rubber door silencers. Install three on strike jamb for each single door and two at head for each pair of doors.

.16 Make provision for glazing as indicated and provide the following:

.1 Channel formed glazing stop, 16 mm high, welded in place on secure side.

.2 Screw fixing with countersunk oval head sheet metal screws on non-secure side.

.17 When required due to site access or due to shipping limitations, frames for large openings may be fabricated in sections with splice joints for field assembly. Show the locations of field joints on the *Shop Drawings* and adhere to those locations.

PART 3 EXECUTION

3.01 EXAMINATION

.1 Examine areas and conditions under which work is to be performed and notify the *Contractor* in writing of conditions detrimental to the proper and timely completion of the *Work*.

.2 Verify existing conditions before starting work.

.3 Verify that opening sizes and tolerances are acceptable.

.4 Verify that finished walls are in plane to ensure proper door alignment.

.5 Do not proceed with the work until unsatisfactory conditions have been corrected to the satisfaction of the installer.

.6 Commencement of the installation will be construed as acceptance of the site conditions and, thereafter, the *Contractor* shall be fully responsible for satisfactory work as specified herein.

3.02 PREPARATION

.1 Coat inside of frames to be installed in masonry or to be grouted, with bituminous coating to a thickness of 1.6 mm prior to installation.

3.03 INSTALLATION - GENERAL

.1 Install doors and frames in accordance with the reviewed *Shop Drawings*, CSDMA Storage and Installation Guide, manufacturer's instructions, and custom guidelines indicated.

.2 Install fire rated units in accordance with NFPA 80.

.3 Coordinate frame anchor placement with wall construction.

.4 Install door hardware as specified in Section 08 71 10 - Door Hardware.
.5 Glaze doors and frames as specified in Section 08 80 00 - Glazing.
.6 Coordinate the installation of electrical connections to electrical hardware items.
.7 Touch up damaged factory finishes.

3.04 FRAME INSTALLATION

.1 Set frames plumb, square, level and at correct elevation and secure anchorages and connections to adjacent construction.
.2 Brace frames rigidly in position while building in. Install temporary horizontal wood spreader at third points of the door opening to maintain the frame width. Provide vertical support at the centre of the head for openings over 1200 mm wide. Remove temporary spreaders after frames are built in.
.3 Make allowances for deflection of the structure to ensure structural loads are not transmitted to frames.
.4 Grout exterior frames solid on the exterior side and fill on the interior side with insulation.
.5 Refer to Section 07 92 00 - Joint Sealants for application of sealant around the exterior and interior perimeter of the frames.

3.05 DOOR INSTALLATION

.1 Install doors and hardware in accordance with hardware templates and manufacturer's instructions and Section 08 71 10 - Door Hardware.
.2 Provide even margins between doors and jambs and doors and finished floor and thresholds as follows.
    .1 Hinge side: 1.0 mm.
    .2 Latchside and head: 1.5 mm.
    .3 Finished floor and thresholds:
        .1 Generally: 13 mm.
        .2 Doors identified as undercut: 25 mm.

3.06 ADJUSTING

.1 Adjust for smooth and balanced door movement.

3.07 CLEANING

.1 Remove from the premises all surplus material, dirt and debris caused by the *Work* of this section and leave the installation clean.
.2 Make good damage to other *Work* caused by the *Work* of this section

3.08 SCHEDULE

.1 Refer to the door and frame schedule on the *Drawings.*

END OF SECTION 08 11 13

This page intentionally left blank

SECTION 08 33 23.00
OVERHEAD COILING DOORS

PART 1 GENERAL

1.01 RELATED DOCUMENTS

.1 *Drawings* and general provisions of the *Contract,* including General and Supplementary Conditions and Division 01 *Specifications* sections apply to this section.

1.02 SUMMARY OF WORK

.1 *Work* included:

.1 The *Work* of this section includes the provision of all labour, materials, equipment and *Services* required to fabricate and install overhead coiling doors, including operating hardware and control systems, as indicated on the *Drawings,* as specified herein, and as required for a complete *Project.*

.2 The *Work* includes:

.1 Interior overhead coiling fire shutters supplied and installed by the *Contractor.*

1.03 RELATED REQUIREMENTS

.1 Section 05 50 00 - Metal Fabrications: Support framing.

.2 Section 07 92 00 - Joint Sealants: Sealing joints between frames and adjacent construction.

.3 Section 08 71 10 - Door Hardware: Cylinder cores and keys.

.4 Section 09 91 00 - Painting *.

.5 Electrical *ConsultantDrawings* and *Specifications.*

1.04 REFERENCE STANDARDS

.1 ASTM A653/A653M - Standard Specification for Steel Sheet, Zinc-Coated (Galvanized) or Zinc-Iron Alloy-Coated (Galvannealed) by the Hot-Dip Process 2020.

.2 CSA C22.1 - Canadian Electrical Code, Part 1 (25th Edition), Safety Standard for Electrical Installations 2021.

.3 NFPA 80 - Standard for Fire Doors and Other Opening Protectives 2016.

1.05 SUBMITTALS

.1 See Division 01, General and Supplementary conditions of the Contract for submittal procedures.

.2 *Product* Data: Provide manufacturer's data sheets, including:

.1 Details of construction and fabrication.

.2 Storage and handling requirements and recommendations.

.3 Electrical requirements and connections.

.4 Preparation instructions and recommendations.

.5 Manufacturer's installation instructions: Indicate installation sequence and procedures, adjustment and alignment procedures,

.3 *Shop Drawings:*

.1 Include detailed plans, elevations, details of framing members, anchoring methods, required clearances, hardware, and accessories.

.2 Include relationship with adjacent construction.
.3 Include electrical wiring diagrams and locations of equipment.

.4 Manufacturer's Qualification Statement.

.5 Installer's Qualification Statement.

.6 Manufacturer's Certificates: Certify *Products* meet or exceed specified requirements.

.7 Warranty documentation.

.8 Maintenance Data:

.1 Provide manufacturer's maintenance instructions for inclusion in the operation and maintenance manual specified in Division 01, General and Supplementary conditions of the Contract.

.2 Include recommendations for periodic checking, adjustment and lubrication of components.

1.06 QUALITY ASSURANCE

.1 Manufacturer Qualifications: Company specializing in manufacturing the *Products* specified in this section with minimum five (5) years of documented experience.

.2 Installer Qualifications: Company specializing in performing work of type specified and with at least three years documented experience and approved by manufacturer.

.3 *Product* Requiring Electrical Connection: Electrical motors, components, devices, wiring and accessories as listed and labelled by Canadian Electrical Code CSA C22.1, and acceptable to the authorities having jurisdiction as suitable for purpose specified.

1.07 DELIVERY, STORAGE, AND HANDLING

.1 Store *Products* in manufacturer's unopened packaging with seals and labels intact until ready for installation.

.2 Store materials off the ground in a dry, warm, ventilated weathertight location and protect from damage.

1.08 COORDINATION

.1 Coordinate with Section 05 50 00 - Metal Fabrications to ensure that proper provision is made for the overhead support of overhead door and fire shutter assemblies.

.2 Ensure that locating templates and other information required for installation of the *Products* of this section are furnished to affected trades in time to prevent interruption of construction progress.

1.09 WASTE MANAGEMENT AND DISPOSAL

.1 Cooperate with the waste management coordinator in the implementation of the Waste Management Plan specified in Division 01, General and Supplementary conditions of the Contract.

.2 Handle and dispose of waste materials, including packaging materials, generated by the *Work* of this Section in accordance with the waste management plan.

1.10 WARRANTY

.1 For the *Work* of this Section, the warranty period prescribed in Division 01 - General Conditions of the *Contract* is extended to 5 years.

.2 In addition, provide a five (5) year manufacturer's warranty for each *Product.*

.3 In addition, provide seven (7) year manufacturer's warranty for vision glazing in overhead coiling door.

PART 2 PRODUCTS

2.01 MANUFACTURERS

.1 This specification is based on products manufactured by Cornell Iron Works, CornellCookson LLC

.2 Requests for *Substitutions* will be considered in accordance with the provisions of Division 01, General and Supplementary conditions of the Contract.. Acceptance of alternative *Products* is subject to the approval of the *Consultant.*

.3 Single-Source Responsibility: For each type of door, Provide doors, tracks, motors, and accessories from one manufacturer. Provide secondary components from sources acceptable to the manufacturer of the primary components.

2.02 INTERIOR OVERHEAD COILING FIRE SHUTTERS

.1 Standard of acceptance: Model ERD11, face-of-wall mount, by Cornell.

.2 Label: Provide fire doors with minimum 3 hour UL labels.

.3 Curtain: Interlocking roll-formed 0.61 mm (24ga) galvanized steel slats as follows:

.1 Profile: Flat type.

.2 Finish: Slats and hood galvanized steel to ASTM A653/A653M finished with a rust-inhibitive roll coating process, including bonderizing, a 0.005 mm thick baked prime paint, and a 0.015 mm thick baked top coat. Colour as indicated on the *Drawings*.

.3 Endlocks shall be attached to each end of alternate slats to prevent lateral movement.

.4 Bottom Bar: Two galvanized structural steel angles with PowderGuard Zinc Finish, 38 mm x 38 mm x 3 mm minimum.

.5 Guides: Roll-formed steel shapes attached to continuous steel wall angle.

.6 Brackets: To support counterbalance, curtain and hood: Hot rolled steel

.7 Counterbalance: Helical torsion spring type housed in a steel tube or pipe barrel, supporting the curtain with deflection limited to 2.5 mm per metre of span. Counterbalance to be adjustable by means of an adjusting tension wheel.

.8 Hood: 0.61 mm (24 ga) galvanized primed steel. Provide intermediate support brackets as required.

.9 Operation:

.1 Operation Cycle Requirements: Provide overhead coiling door components and operators capable of operating for not less than 20,000 cycles.

.10 Manual Operation:

.11 FireGard™ Series Manual Chain Operation: Thermally activated, manually operated system with planetary gear reduction and internal release mechanism.
- .1 Provide an internal brake mechanism to hold the door at any position during normal door operation.
- .2 Thermally activate automatic closure by melting of a fusible link.
- .3 Control automatic closure speed with an internal, totally enclosed, variable rate centrifugal governor without the use of electrical pulsation, non-variable rate viscosity, oscillation type or other governing devices.\
- .4 Maintain automatic closure speed at an average of 12” (304mm) per second
- .5 Reset door system by reconnecting fusible links or by re-engaging a failsafe release device from floor level.
- .6 Provide minimum #50 roller chain from operator output shaft to the door drive shaft.
- .7 Install system only with manufacturer supplied or specified fasteners.
- .8 Ensure that manual resetting of spring tension or mechanical components will not be required.
- .9 Drop test and reset door system twice by all means of activation and comply fully with NFPA 80 Section 5.

PART 3 EXECUTION

3.01 EXAMINATION

.1 Examine the areas and conditions under which the *Work* is to be performed and notify the *Consultant* in writing of conditions detrimental to the proper and timely completion of the *Work.*

.2 Examine conditions of substrates, supports, and other conditions. Verify that:

.3 Verify that:
- .1 Openings have been properly prepared.
- .2 Adjacent walls and bulkheads are constructed in accordance with the required fire resistance requirements.
- .3 All necessary structural support, electrical work and miscellaneous metal fabrications are in place.

.4 Take field measurements to verify or supplement dimensions.

.5 Do not proceed with the work until unsatisfactory conditions have been corrected to the satisfaction of the installer.

.6 Commencement of the installation will be construed as acceptance of the site conditions and, thereafter, the *Contractor* shall be fully responsible for satisfactory work as specified herein.

3.02 PREPARATION

.1 Clean surfaces thoroughly prior to installation.

.2 Prepare surfaces using the methods recommended by the manufacturer for achieving the best result for the substrate under the *Project* conditions.

3.03 INSTALLATION

.1 Install units in accordance with the reviewed and accepted *Shop Drawings* and the manufacturer's instructions.

.2 Install the rolling fire shutters in accordance with NFPA 80.

.3 Install the rolling door and fire shutter assmblies complete with necessary hardware, jamb and head mould strips, anchors, inserts, hangers, and equipment supports as required for a complete installation.

.4 Use anchorage devices to securely fasten assembly to wall construction and building framing without distortion or stress.

.5 Securely and rigidly brace components suspended from structure.

.6 Fit and align the assembly including hardware; level and plumb, to provide smooth operation.

.7 Make electrical connections by electricians licensed to practise in the location of the *Project.*

.1 Coordinate installation of electrical *Services* with the electrical *Contractor*.

.2 Complete wiring from disconnect to unit components.

.3 Complete wiring from fire alarm system where applicable.

.8 Install enclosure and perimeter trim.

.9 All exposed fasteners to be capped to ensure no sharp edges.

3.04 TOLERANCES

.1 Maintain dimensional tolerances and alignment with adjacent work.

.2 Maximum Variation From Plumb: 1.6 mm.

.1 Maximum Variation From Level: 1.6 mm.

.2 Longitudinal or Diagonal Warp: Plus or minus 3.2 mm per 3 m straight edge.

3.05 ADJUSTING

.1 Test for proper operation and adjust as necessary to provide proper operation without binding or distortion.

.2 Adjust hardware operating assemblies for smooth and noiseless operation.

3.06 CLEANING

.1 Clean curtain and components using non-abrasive materials and methods recommended by manufacturer.Clean installed components.

.2 Remove labels and visible markings.

.3 Touch-up, repair or replace damaged *Products* to the satisfaction of the *Consultant* before *Ready-For-Takeover.*

.4 Remove from the premises all surplus material, dirt and debris caused by the *Work* of this section and leave the installation clean.

.5 Make good damage to other work caused by the *Work* of this section.

END OF SECTION 08 33 23.00

This page intentionally left blank

SECTION 08 36 13
SECTIONAL METAL OVERHEAD DOORS

PART 1 GENERAL

1.01 RELATED DOCUMENTS

.1 *Drawings* and general provisions of the *Contract,* including, General and Supplementary Conditions*,* and Division 01 *Specifications* sections, apply to this section.

1.02 SUMMARY OF WORK

.1

Work Included: The *Work* of this Section includes the provision of all labour, materials, equipment and *Services* required to fabricate and install sectional insulated metal overhead doors, to come with all wiring and electrical connections, as indicated on the *Drawings*, as specified herein and as required for a complete *Project*.

.1 The *Work* includes:

.1 Overhead sectional doors, electrically operated.

.2 Operating hardware and supports.

.3 Electrical controls.

1.03 RELATED REQUIREMENTS

.1 Section 05 50 00 - Metal Fabrications:

.1 Steel channel opening frame.

.2 Miscellaneous metal fabrications required for a complete installation

.2 Section 07 42 13 - Insulated Metal Wall Panels - Standard Core *

.3 Section 07 42 15 - Insulated Metal Wall Panels - Mineral Wool Core *

.4 Section 07 92 00 - Joint Sealants: Sealing joints between frames and adjacent construction.

.5 Refer to electrical information for electrical connections.

1.04 REFERENCE STANDARDS

.1 ANSI/CAN/UL 325 - Door, Drapery, Gate, Louver, and Window Operators and Systems 2017.

.2 ASTM E283 - Standard Test Method for Determining the Rate of Air Leakage Through Exterior Windows, Curtain Walls, and Doors Under Specified Pressure Differences Across the Specimen 2004 (Reapproved 2012).

.3 ASTM E330/E330M - Standard Test Method for Structural Performance of Exterior Windows, Doors, Skylights and Curtain Walls by Uniform Static Air Pressure Difference 2014 (Reapproved 2021).

.4 CSA C22.1 - Canadian Electrical Code, Part 1 (25th Edition), Safety Standard for Electrical Installations 2021.

.5 CSA G164 - Hot Dip Galvanizing of Irregularly Shaped Articles, Includes Update No. 1 (2020) 2018.

.6 DASMA 102 - American National Standard Specifications for Sectional Overhead Type Doors 2011.

.7 NEMA 250 - Enclosures for Electrical Equipment (1000 Volts Maximum) 2020.

.8 NEMA ICS 2 - Industrial Control and Systems Controllers, Contactors and Overload Relays Rated 600 Volts 2000, with Errata (2008).

.9 NEMA MG 1 - Motors and Generators 2017.

1.05 DESIGN CRITERIA

.1 Design exterior door assemblies to withstand wind load of 1 kPa with a maximum horizontal deflection of 1/240 of opening width.

.2 Design door assemblies to withstand minimum 100,000 cycles.

1.06 SUBMITTALS

.1 See Section 01 30 00 - Administrative Requirements, for submittal procedures.

.2 *Product* Data: Provide complete manufacturer's *Product* data for the door and the door operator

.1 Show component construction, anchorage method, and hardware

.2 Include manufacturers' installation instructions.

.3 Include any special procedures required by *Project* conditions.

.3 *Shop Drawings:*

.1 Indicate opening dimensions and required tolerances, connection details, anchorage spacing, hardware locations, and installation details, operating mechanisms, electrical power supply and wiring.

.2 Clearly indicate materials, operating mechanisms, electrical power supply and wiring, required clearances, provisions for fastening, weatherstripping, structural anchoring and electrical connections.

.3 The overhead door assembly shall be designed by a professional engineer licensed to practice in the Province of the *Project*, and who is experienced in providing engineering *Services* of the kind indicated. Each of the *Shop Drawings* submitted shall bear the stamp and signature of the aforesaid structural engineer.

.4 The electrical operator, wiring, and connections shall be designed by a professional engineer permanently licensed to practise in the Province of the *Project* and who is experienced in providing engineering *Services* of the kind indicated. Each of the *Shop Drawings* submitted shall bear the stamp and signature of the aforesaid electrical engineer.

.5 Post-installation certification: After installation, provide written certification, signed by the Structural Engineer responsible for the shop drawings, that all applicable items have been installed in accordance with the shop drawings.

.4 Samples: If requested by the *Owner* or the *Consultant* submit samples of door section construction, showing joints, weatherstripping etc.

.5 Manufacturer's Qualification Statement.

.6 Installer's Qualification Statement.

.7 Maintenance Data: Provide maintenance data for inclusion in the operation and maintenance manual specified in Section 01 78 00 - Closeout Submittals.

.1 Operation Data: Include normal operation, troubleshooting, and adjusting.

.2 Maintenance Data: Include data for motor and transmission, shaft and gearing, lubrication frequency, spare part sources.Include installation instructions for the entire system including doors, hardware, controls and motors.

.8 Warranty: Submit manufacturer's warranty and ensure forms have been completed in the *Owner's* name and registered with the manufacturer.

1.07 QUALITY ASSURANCE

.1 Manufacturer Qualifications: Company specializing in manufacturing the *Products* specified in this section with minimum five years of documented experience.

.2 Installer Qualifications: Manufacturer’s authorized representative who is trained and approved for both installation and maintenance of units, and having experience with the specified *Products* for a minimum of five years; the supervisor for the installation crew shall have a current Canadian Door Institute Level 3 Certification for Commercial Door Installation and have a minimum of three years of documented site experience.

.3 Comply with applicable code for motor and motor control requirements.

.1 Electrical motors, components, devices, wiring and accessories to be as listed and labelled by the Canadian Electrical Code CSA C22.1, or a testing firm acceptable to the authorities having jurisdiction as suitable for purpose specified.

1.08 QUALITY ASSURANCE

.1 Installation shall be directly supervised by a technical representative of the door manufacturer.

1.09 PROTECTION

.1 Apply temporary protective coating to finished surfaces. Do not use coatings that will become difficult to remove or leave residue.

.2 Leave protective coating in place until final cleaning of building. Remove coating at that time.

1.10 STORAGE AND HANDLING

.1 Store and handle materials in strict accordance with the manufacturer's recommendations.

1.11 WASTE AND MANAGEMENT DISPOSAL

.1 Cooperate with the Waste Management Coordinator in the implementation of the Waste Management Plan specified in Section 01 74 19 - Construction Waste Management and Disposal.

.2 Handle and dispose of waste materials generated by the *Work* of this Section in accordance with the Waste Management Plan.

1.12 WARRANTY

.1 For the *Work* of this section, the warranty prescribed in Division 01, the General and Supplementary Conditions of the *Contract* is extended to five (5) years.

.1 Include coverage for electric motor and transmission.

.2 Provide a five (5) year manufacturer's warranty for electric operating equipment.

.2 Provide all manufacturer's standard warranties for doors and components, filled out in the name of the Owner for submission in the Operations and Maintenance manual as specified in Div 01.

PART 2 PRODUCTS

2.01 MANUFACTURERS

.1 This specification is based on sectional insulated metal overhead doors by Garaga Inc.

.2 Subject to compliance with the specification requirements and the prior approval by the *Owner*, equivalent *Products* by the following manufacturers are acceptable alternatives.

.1 CEDO Door
.2 Overhead Door Corp.
.3 Richards-Wilcox Canada Inc.
.4 Thermostop Inc.

.3 Requests for *Substitutions* will be considered in accordance with provisions of Section 01 25 00 - Substitution Procedures. Acceptance of alternative *Products* is subject to the approval of the *Consultant.*

2.02 STEEL DOORS

.1 Steel Doors: Flush steel, insulated; high lift operating style with track and hardware; complying with DASMA 102, Commercial application. Standard of acceptance: Model G-5000 by Garaga Inc, acceptable alternate CEDO Door 1400 series.

.1 Performance: Withstand positive and negative wind loads equal to 1.5 times design wind loads specified by local code without damage or permanent set, when tested in accordance with ASTM E330/E330M, using 10 second duration of maximum load.
.2 Door Nominal Thickness: 45 mm thick.
.3 Thermal Transmittance: Usi-factor of 1.76 W/sq m K Maximum in accordance with DASMA 102; and to meet OBC - SB 10, whichever is more stringent.
.4 Air Leakage Rate: Less than 2.0 L/sec/sq m when tested in accordance with ASTM E283 at test pressure difference of 75 Pa.
.5 Exterior Finish: Factory finished with acrylic baked enamel; colour as indicated in Drawings.
.6 Interior Finish: Factory finished with acrylic baked enamel; colour as indicated on the *Drawings.*
.7 Glazed Lights: Full panel width, one row; set in place with a resilient glazing channel as indicated in *Drawings.*
.8 Electric Operation: Electric control station.

.2 Door Panels: Steel construction; outer steel sheet of 16 gauge, 1.6 mm minimum thickness, flush profile; inner steel sheet of 16 gauge, 1.6 mm minimum thickness, flat profile; core reinforcement, where resheet steel roll formed to channel shape, rabbeted weather joints at meeting rails; R-16 polyurethane insulation.

.3 Glazing: Fully tempered glass; insulated; clear; 6.4 mm thick; factory installed.

2.03 COMPONENTS

.1 Hardware:

.1 Track: Heavy duty tracks, as indicated and as required, 76 mm size, minimum 2.8 mm (12 ga) thick galvanized steel. Include 3.04 mm (11 ga) thick, continuous track angles and ancillary hardware items.

.2 Bearing plates: 3.42 mm (10 ga) thick galvanized steel plates with press fitted ball bearings. Fit track bearing brackets with grease packed, self aligning flange Pollard bearings.
.3 Top roller carriers: Heavy duty, 3.04 mm (11 ga) thick galvanized steel, adjustable type to permit door to be butted against the lintel for maximum weather seal. Provide double top roller carriers
.4 Rollers: 76 mm dia. with 6 mm dia. ball bearings, running in hardened inner and outer racers. Roller stem (long stem type) to be heavy cold rolled steel.
.5 Hinges: 3.04 mm thick (11 ga) thick, galvanized steel, graduated to ensure a weathertight closing at the jambs. Provide double end hinges.
.6 Bottom carrier brackets: Extra heavy duty, cast iron, adjustable, securely fastened to door.
.7 Torsion springs: Oil tempered, helically wound, designed to withstand minimum 50,000 per year. Retain cross header shaft in grease packed, self aligning flange Pollard bearings set in 3.4 mm (10 ga) thick bearing plates at each side of the horizontal tracks. Supply sufficient intermediate bearing plates to support the spring shaft and door load.
.8 Drums: Cable drums (2), high pressure die cast aluminum alloy, c/w guarded cable entry. Cable adjustment controlled with set screws from the free side of the drums, facing the door centre.
.9 Cables: Galvanized aircraft type with construction of 7 x 19 with a safety factor to suit a minimum 50,000 cycles life.
.10 Shaft: 32 mm dia., cold rolled, solid cross header shaft, keyed to receive drums, c/w coupling and drive sprockets as required.
.11 Finish: Finish ferrous hardware items with minimum zinc coating of 300 g/m^2 to CSA G164.

.2 Sill Weatherstripping: Resilient hollow rubber strip, one piece; fitted to bottom of door panel, full length contact.
.3 Jamb Weatherstripping: Roll formed steel section full height of jamb, fitted with resilient weatherstripping, placed in moderate contact with door panels.
.4 Head Weatherstripping: EPDM rubber seal, one piece full length.
.5 Panel Joint Weatherstripping: Neoprene foam seal, one piece full length.
.6 Lock: Inside side mounted, adjustable keeper, spring activated latch bar with feature to retain in locked or retracted position; interior and exterior handle.
.7 Lock Cylinders: Supplied by Section 08 71 10 - Door Hardware.

2.04 ELECTRIC OPERATION

.1 Door opener: Standard of acceptance: Model 8500 by Liftmaster.
.2 Operator, Controls, Actuators, and Safeties: Comply with ANSI/CAN/UL 325; provide *Products* labelled and listed in accordance with CSA C22.1.
.1 Provide interlock switches on motor operated units.
.2 Provide tamperproof operation cycle counter.
.3 Mounting: Side mounted on cross head shaft.
.4 Motor Enclosure:
.1 Exterior Doors: NEMA MG 1, Type 4; open drip proof.
.2 Interior Doors: NEMA MG 1, Type 1; open drip proof.

.5 Motor Rating: 1118 W (1.5 HP) ; continuous duty.
.6 Motor Voltage: 230 volts, single phase, 50-60 Hz.
.7 Motor Controller: NEMA ICS 2, full voltage, reversing magnetic motor starter.
.8 Controller Enclosure: NEMA 250, Type 1.
.9 Opening Speed: 300 mm/s.
.10 Brake: Adjustable friction clutch type, activated by motor controller.
.11 Manual override in case of power failure.
.12 Refer electrical *Drawings* and *Specifications* for electrical connections.

.3 Wiring Terminations: Provide terminal lugs to match branch circuit conductor quantities, sizes, and materials indicated; enclose terminal lugs in terminal box sized to comply with CSA C22.1.

.4 Control Station: Provide standard three button (Open-Close-Stop) momentary-contact control device for each operator complying with ANSI/CAN/UL 325.

.5 Safety Edge: Located at bottom of sectional door panel, full width; electro-mechanical sensitised type, wired to stop and reverse door direction upon striking object; hollow neoprene covered to provide weatherstrip seal.

2.05 FABRICATION

.1 Verify dimensions on site prior to fabrication.

PART 3 EXECUTION

3.01 EXAMINATION

.1 Examine areas and conditions under which work is to be performed and notify the *Consultant* in writing of conditions detrimental to the proper and timely completion of the *Work.*

.2 Verify that wall openings are ready to receive work and opening dimensions and tolerances are within specified limits.

.3 Verify that electric power is available and of the correct characteristics.

.4 Do not proceed with the work until unsatisfactory conditions have been corrected to the satisfaction of the installer.

.5 Take field measurements to verify or supplement dimensions.

.6 Commencement of the installation will be construed as acceptance of the site conditions and, thereafter, the *Contractor* shall be fully responsible for satisfactory work as specified herein.

3.02 PREPARATION

.1 Prepare the opening to permit correct installation of the door unit to the perimeter air and vapour barrier seal.

3.03 COORDINATION WITH OTHER TRADES

.1 Coordinate with other trades to ensure that required work by others is properly and completely executed.

.2 Coordinate with Section 05 50 00 - Metal Fabrications, and provide *Drawings* and/or templates as required to ensure that openings are properly prepared, including door frames, frame extensions and mounting plates to receive torsion spring assembly and electric operators.

.3 Coordinate power supply and electrical hook-up with *Electrical Drawings* and *Specifications*.

3.04 INSTALLATION

.1 Install the door assembly in accordance with the manufacturer's instructions and the reviewed and accepted *Shop Drawings.*

.2 Install level, plumb and in true alignment.

.3 Anchor the assembly to wall construction and building framing without distortion or stress.

.4 Securely brace door tracks suspended from the structure. Secure tracks to structural members only.

.5 Fit and align the door assembly, including hardware.

.6 Install wiring and make electrical connection to the disconnect provided by electrical *Drawings* and *Specifications*. Test electrical circuits for correct operation.

.7 Protect exposed finishes from damage. Leave protective material in place until immediately prior to handing over to the *Owner.*

.8 Coordinate with Section 05 50 00 - Metal Fabrications to ensure that track guards are properly installed.

.9 Coordinate installation of electrical *Services*. Complete power and control wiring from disconnect to unit components.

.10 Install perimeter trim and closures.

3.05 TOLERANCES

.1 Maximum Variation from Plumb: 1.5 mm.

.2 Maximum Variation from Level: 1.5 mm.

.3 Longitudinal or Diagonal Warp: Plus or minus 3 mm from 3 m straight edge.

.4 Maintain dimensional tolerances and alignment with adjacent work.

3.06 ADJUSTING

.1 Adjust door assembly for smooth operation and full contact with weatherstripping.

.2 Have manufacturer's site representative confirm proper operation and identify adjustments to door assembly for specified operation.

.3 Touch-up with zinc rich primer where galvanized finish damaged during fabrication.

.4 Adjust operable parts for correct, smooth function.

.5 Adjust weatherstripping to form a weathertight seal.

3.07 CLEANING

.1 Upon completion of the installation, remove from the premises all surplus material, dirt and debris caused by the *Work* of this Section and leave the installation clean.

.2 Clean exposed surfaces

.3 Clean doors and frames.

.4 Remove temporary labels and visible markings.

.5 Make good damage to other work caused by the *Work* of this section.

3.08 PROTECTION

.1 Protect installed *Products* from damage. Leave protective material in place until the date of *Ready-For-Takeover.*

.2 Do not permit construction traffic through overhead door openings after adjustment and cleaning.

END OF SECTION 08 36 13

SECTION 08 44 35
PROTECTIVE FRAMED GLAZING ASSEMBLIES

PART 1 GENERAL

1.01 RELATED DOCUMENTS

.1 *Drawings* and general provisions of the *Contract*, including General and Supplementary Conditions and Division 01 Specifications sections, apply to this section.

1.02 SECTION INCLUDES

.1 Interior protective framed glazing assemblies

1.03 RELATED REQUIREMENTS

.1 Section 07 84 00 - Firestopping: Firestop between work of this section and other fire resistive assemblies.

.2 Section 07 92 00 - Joint Sealants: Sealing joints between frames and adjacent construction.

.3 Section 08 80 00 - Glazing: Fire rated glazing for fire rated interior frames.

1.04 REFERENCE STANDARDS

.1 AAMA CW-10 - Care and Handling of Architectural Aluminum From Shop to Site 2015.

.2 ASTM E1300 - Standard Practice for Determining Load Resistance of Glass in Buildings 2016.

.3 CAN/ULC S101 - Standard Methods of Fire Endurance Tests of Building Construction and Materials 2014.

.4 CAN/ULC S106 - Standard Method for Fire Tests of Window and Glass Block Assemblies 2015.

.5 NAAMM AMP 500-06 - Metal Finishes Manual 2006.

.6 NFPA 80 - Standard for Fire Doors and Other Opening Protectives 2016.

.7 NFPA 257 - Standard on Fire Test for Window and Glass Block Assemblies 2017.

1.05 ADMINISTRATIVE REQUIREMENTS

.1 Coordinate with installation of other components that comprise the fire resistive assembly.

1.06 SUBMITTALS

.1 See Division 01, General and Supplementary conditions of the *Contract* for submittal procedures.

.2 Product Data:

.1 Provide evidence of compliance with fire performance criteria, Underwriters Laboratories, Inc. listings and manufacturer's published product data on framing components, glazing, anchorage and fasteners.

.3 Shop Drawings: Indicate system dimensions, framed opening requirements and tolerances, affected related work, expansion and contraction joint location and details, site welding required and attachment to structure.

.4 Certificates of compliance from glass and glazing materials manufacturers attesting that glass and glazing materials furnished for project comply with requirements.

.1 Separate certification will not be required for glazing materials bearing manufacturer's permanent label designating type and thickness of glass, provided labels represent a quality control program involving a recognized certification agency or independent testing laboratory acceptable to authority having jurisdiction.

.5 Manufacturer's Qualification Statement.

.6 Installer's Qualification Statement.

.7 Warranty Documentation: Submit manufacturer warranty and ensure forms have been completed in Owner's name and registered with manufacturer.

1.07 QUALITY ASSURANCE

.1 Source Limitations for Glazing Accessories: Obtain framing system, glazing and glazing accessories from one source for each product and installation method indicated.

.2 Fire-Rated Window Assemblies: Assemblies complying with NFPA 80 that are classified and labeled by UL, for fire ratings indicated, based on testing according to NFPA 257. Assemblies must be factory-welded or come complete with factory-installed mechanical joints and must not require job site fabrication.

.3 Listings and Labels - Fire Rated Assemblies: Under current follow-up service by Underwriters Laboratories® maintaining a current listing or certification. Label assemblies accordance with limits of manufacturer's listing.

.4 Manufacturer Qualifications: Company specializing in manufacturing products specified in this section with at least ten (10) years documented experience.

.5 Installer Qualifications: Company specializing in performing work of the type specified and with at least three (3) years documented experience.

1.08 DELIVERY, STORAGE, AND HANDLING

.1 Handle products of this section in accordance with AAMA CW-10.

.2 Protect finished surfaces with wrapping. Do not use adhesive papers or sprayed coatings that bond to substrate when exposed to sunlight or weather.

.3 Deliver, store and handle under provisions specified by manufacturer.

1.09 SITE CONDITIONS

.1 Do not install sealants when ambient temperature is less than 5 degrees C, and maintain above this minimum temperature during and for 48 hours after installation.

1.10 WARRANTY

.1 See Section 01 78 00 - Closeout Submittals, for additional warranty requirements.

.2 Correct defective Work within a five year period after Date of Ready-For-TakeoverSubstantial Performance.

.3 Provide the manufacturer's standard five (5) year warranty with forms completed in the *Owner*'s name and registered with the manufacturer.

PART 2 PRODUCTS

2.01 MANUFACTURER

.1 This specification is based on Interior fire rated glazing assembly Products by TGP Architectural.

.1 Technical Glass Products; Fireframes ® Designer Series by TGP: www.fireglass.com/#sle.

.1 Fire rated steel frame and glazing system as manufacturered and supplied by Technical Glass Products.
Address: 8107 Bracken Place SE, Smoqualmie, WA 98065
Phone: 800-426-8300
Email: salfe@fireglass.com

.2 Substitutions: Requests for substitutions will be considered in accordance with provisions of Division 01, General and Supplementary conditions of the *Contract.* Acceptance of alternative Products is subject to the approval of the *Consultant* and the *Owner.*

.1 All fire rated framing products and glass products to be sourced from a single manufacturer. Contractor to ensure that all portions of the assembly are compatible.

2.02 PERFORMANCE REQUIREMENTS

.1 Provide factory fabricated, factory finished framing members with glazing and related anchorage and attachment devices.

.2 Structural Performance: Design to support dead loads and applicable horizontal live loads; coordinate connection to main structural members.

.1 Comply with ASTM E1300 for design load resistance of glass type, thickness, dimensions, and maximum lateral deflection of supported glass.

.2 Design and size the system to withstand structural forces placed upon it without damage or permanent set when tested in accordance with ASTM E330/E330M using load 1.5 times the design wind loads and of 10 seconds in duration.

.3 Provide glass edge support system sufficiently stiff to limit lateral deflection of supported glass edges to less than 1/175 of their lengths or 19 mm, whichever is less.

.3 Fire Performance: Provide hourly fire-resistance-rating as indicated in *Drawings*; tested as an assembly including glazing in compliance with CAN/ULC S101, CAN/ULC S106 and requirements of local authorities having jurisdiction.

2.03 COMPONENTS

.1 Framing Members: Formed steel structural members with or without aluminum cladding and non-combustible thermally-resistive material as required for fire rating.

.1 Fabrication: Joints and corners flush, hairline, and weatherproof, accurately fitted and secured; prepared to receive anchors; fasteners and attachments concealed from view; reinforced as required for imposed loads.

.2 Frame: Steel profile formed tubing

.3 Fasteners: As recommended by manufacturer

.4 Glazing Accessories: Calcium silicate setting blocks.

.5 Window Assembly Dimensions:

.1 Perimeter framing face dimension: 2 3/4-inch at head, sill and jamb.
.2 Horizontal and/or vertical mullions: 3 9/16-inch on the face.
.3 Depth of perimeter and mullion: 1 15/16-inch.
.6 Finish: Confirm
.2 Fire rated glass materials: Refer to section 08 80 00 - Glazing for requirements of fire rated glazing.
.1 Performance: Glass must be rated to stop fire from either direction and must meet all testing requirements.

2.04 INTERIOR WINDOW FABRICATION

.1 Furnish interior frame assemblies 'K-D' (or welded upon request of *Owner* and/or *Consultant*)
.1 When necessary, splice frames too large for shop fabrication or shipping or to fit in available building openings.
.2 Fit with suitable fasteners.
.2 Field glaze assemblies
.3 Fabrication dimensions: Fabricate to fire-rated field dimensions
.4 Finish: Confirm powder coat finish with *Owner.*
.5 Obtain approved shop drawings prior to fabrication.

2.05 FINISHES

.1 Confirm finish requirements with *Owner*.
.2 Finishing: Apply factory finish to surfaces that will be exposed in completed assemblies.
.1 Touch-up surfaces cut during fabrication so that no natural metal surfaces are visible in completed assemblies, including joint edges.
.3 Comply with NAAMM AMP 500-06 "Metal Finishes Manual for Architectural and Metal Products" for recommendations for applying and designating finishes.

PART 3 EXECUTION

3.01 EXAMINATION

.1 Examine substrates and members to which the work of this section attaches or adjoins prior to frame installation.
.2 Notify *Consultant* of any conditions which jeopardize the integrity of the proposed fire wall system.
.3 Verify dimensions, tolerances, and method of attachment with other work.
.4 Verify that anchorage devices have been properly installed and located.

3.02 INSTALLATION

.1 Install wall system in accordance with limitations of fire rating and with manufacturer's instructions.
.2 Install framed glazing assemblies in accordance with NFPA 80 and requirements of local authorities having jurisdiction.
.3 Attach to structure to permit sufficient adjustment to accommodate construction tolerances and other irregularities.
.4 Provide alignment attachments and shims to permanently fasten system to building structure.

.5 Align assembly plumb and level, free of warp or twist. Maintain assembly dimensional tolerances, aligning with adjacent work.

.6 Patching and Repairs:

.1 Limited to minor repair of small scratches. Use only manufacturer's recommended products.

.2 Touch-up minor damage to factory applied finish; replace components that cannot be satisfactorily repaired.

.1 Such repairs shall match original finish for quality or material and view.

.3 Remove and replace glass that is broken, chipped, cracked, abraded, foggy or damaged.

3.03 TOLERANCES

.1 Provide openings plumb, square and within allowable tolerances.

.1 Provide 9.5mm (3/8 inch) shim space at all walls

.2 Maximum Variation from Plumb: 1.75 mm every 1.0 m non-cumulative.

.3 Maximum Misalignment of Two Adjoining Members Abutting in Plane: 0.8 mm.

.4 Sealant Space Between Mullions and Adjacent Construction: Maximum of 19 mm and minimum of 6.4 mm.

3.04 PROTECTION AND CLEANING

.1 Protect glass from contact with contaminating substances resulting from construction operations, including weld splatter. If, despite such protection, contaminating substances do come into contact with glass, remove them immediately as recommended by glass manufacturer.

.2 Protect glass from damage immediately after installation by attaching crossed streamers to framing held away from glass. Do not apply markers to glass surface.

.3 Wash glass on both exposed surfaces in each area of Project not more than four days before date scheduled for inspections that establish date of Ready-For-Takeover. Wash glass as recommended by glass manufacturer. Remove nonpermanent labels, and clean surfaces.

.1 Do not clean with astringent cleaners. Use a clean "grit free" cloth and a small amount of mild soap and water or mild detergent.

.2 Do not use any of the following:

.1 Steam jets

.2 Abrasives

.3 Strong acidic or alkaline detergents, or surface-reactive agents

.4 Detergents not recommended in writing by the manufacturer

.5 Do not use any detergent above 25 degrees C (77 degrees F)

.6 Organic solvents including but not limited to those containing ester, ketones, alcohols, aromatic compounds, glycol ether, or halogenated hydrocarbons.

.7 Metal or hard parts of cleaning equipment must not touch the glass surface

.4 Remove protective material from pre-finished surfaces.

.5 Wash down surfaces with a solution of mild detergent in warm water, applied with soft, clean wiping cloths; take care to remove dirt from corners, and wipe surfaces clean.

END OF SECTION 08 44 35

SECTION 08 51 13
ALUMINUM WINDOWS

PART 1 GENERAL

1.01 RELATED DOCUMENTS

.1 *Drawings* and general provisions of the *Contract* and Division 01 *Specifications* sections, apply to this section.

1.02 SUMMARY OF WORK

.1 *Work* Included: The *Work* of this section includes the provision of all labour, materials, equipment and *Services* required to engineer, fabricate, and install aluminum windows, as indicated on the *Drawings*, as specified herein and as required for a complete *Project.*

.2 The *Work* includes:

.1 Extruded aluminum windows with fixed sash.

.3 Glazing is specified in Section 08 80 00 - Glazing.

1.03 RELATED REQUIREMENTS

.1 Section 06 10 00 - Rough Carpentry: Wood perimeter shims.

.2 Section 07 21 19 - Spray-Applied Urethane Foam Insulation.

.3 Section 07 27 13 - Non-permeable Air/Moisture/Vapour Barrier **.

.4 Section 07 42 13 - Insulated Metal Wall Panels - Standard Core *.

.5 Section 07 42 15 - Insulated Metal Wall Panels - Mineral Wool Core *.

.6 Section 07 92 00 - Joint Sealants: Sealing joints between window frames and adjacent construction.

.7 Section 08 80 00 - Glazing.

1.04 REFERENCE STANDARDS

.1 AA DAF-45 - Designation System for Aluminum Finishes 2003 (Reaffirmed 2009).

.2 AAMA 502 - Voluntary Specification for Field Testing of Newly Installed Fenestration Products 2012.

.3 AAMA 505 - Dry Shrinkage and Composite Performance Thermal Cycling Test Procedure 2017.

.4 AAMA 507 - Standard Practice for Determining the Thermal Performance Characteristics of Fenestration Systems in Commercial Buildings 2015.

.5 AAMA 609 & 610 - Cleaning and Maintenance Guide for Architecturally Finished Aluminum (Combined Document) 2015.

.6 AAMA 910 - Voluntary "Life Cycle" Specifications and Test Methods for AW Class Architectural Windows and Doors 2016.

.7 AAMA 1503 - Voluntary Test Method for Thermal Transmittance and Condensation Resistance of Windows, Doors and Glazed Wall Sections 2009.

.8 AAMA 1801 - Voluntary Specification for the Acoustical Rating of Exterior Windows, Doors, Skylights and Glazed Wall Sections 2013.

.9 AAMA CW-10 - Care and Handling of Architectural Aluminum From Shop to Site 2015.

.10 AAMA TIR-A8 - Structural Performance of Composite Thermal Barrier Framing Systems 2016.

.11 AAMA/WDMA/CSA 101/I.S.2/A440 - North American Fenestration Standard/Specification for windows, doors, and skylights 2017.

.12 NFRC 100 - Procedure for Determining Fenestration Product U-factors 2017.

.13 ASTM A123/A123M - Standard Specification for Zinc (Hot-Dip Galvanized) Coatings on Iron and Steel Products 2017.

.14 ASTM E330/E330M - Standard Test Method for Structural Performance of Exterior Windows, Doors, Skylights and Curtain Walls by Uniform Static Air Pressure Difference 2014 (Reapproved 2021).

.15 ASTM E783 - Standard Test Method for Field Measurement of Air Leakage Through Installed Exterior Windows and Doors 2002 (Reapproved 2018).

.16 ASTM E1105 - Standard Test Method for Field Determination of Water Penetration of Installed Exterior Windows, Skylights, Doors, and Curtain Walls, by Uniform or Cyclic Static Air Pressure Difference 2015.

.17 ASTM F588 - Standard Test Methods for Measuring the Forced Entry Resistance of Window Assemblies, Excluding Glazing Impact 2017.

.18 OBC - Ontario Building Code (Regulation 332/12) 2012.

1.05 ADMINISTRATIVE REQUIREMENTS

.1 Preinstallation Meeting: Conduct a preinstallation meeting before starting the *Work* of this section; require attendance by all affected installers.

1.06 SUBMITTALS

.1 See Division 01, General and Supplementary conditions of the Contract, for submittal procedures.

.2 *Product* Data:

- .1 Provide component dimensions, describe components within the assembly, anchorage and fasteners, internal drainage details, glazing, and spandrel panel construction.
- .2 Include catalogue details for the window system illustrating profiles, dimensions and methods of assembly.
- .3 Provide thermal resistance values of the frames and glass, demonstrating compliance of the curtain wall assembly with OBC SB-10 requirements.
- .4 Include installation instructions.

.3 *Shop Drawings:*

- .1 Indicate opening dimensions, elevations, framed opening tolerances.
- .2 Include large scale details for head, jamb, sill, transoms and mullions, profiles of components, anchorage details, location of isolation coating, description of related components and exposed finishes and fasteners, pressure equalization holes, methods of avoiding thermal bridging, maintenance of integrity of insulation and thermal break between subframe and structure, prevention of air infiltration, maintenance of the integrity of the air barrier, condensation control, caulking and expansion joints.

.4 Test Reports: Submit certified test reports by an independent testing agency showing compliance with specified performance characteristics.

.5 Samples: Submit duplicate samples illustrating finished aluminum surface, glass, and glazing materials.

.6 Manufacturer's Certificate: Certify that the *Products* supplied meet or exceed the specified requirements.

.7 Site Quality Control Submittals: Report of site testing for water penetration and air leakage.

.8 Maintenance Data: Provide maintenance data for cleaning and maintenance of aluminum finishes for incorporation into the operation and maintenance manual specified in Division 01, General and Supplementary conditions of the Contract.

.9 Grade Substantiation: Prior to submitting *Shop Drawings* or starting fabrication, submit one of the following showing compliance with specified grade:

.1 Evidence of CSA Certification.

.2 Test report(s) by a qualified independent testing agency demonstrating compliance and acceptable to Authority Having Jurisdiction and acceptable to the authority having jurisdiction.

.10 Site Quality Control Submittals: Report of Site testing for water penetration and air leakage.

.11 Manufacturer's Qualification Statement.

.12 Installer's Qualification Statement.

.13 Warranty: Submit manufacturer warranties completed in the *Owner's* name and registered with the manufacturer.

1.07 QUALITY ASSURANCE

.1 Manufacturer Qualifications: Company specializing in manufacturing *Products* specified in this section with minimum ten years of documented experience.

.2 Installer Qualifications: Company specializing in performing work of type specified and with at least five years of documented experience and approved by manufacturer and approved by the manufacturer.

1.08 DELIVERY, STORAGE, AND HANDLING

.1 Comply with requirements of AAMA CW-10.

.2 Protect finished surfaces with wrapping paper or strippable coating during installation. Do not use adhesive papers or sprayed coatings that bond to substrate when exposed to sunlight or weather.

.3 Store materials off ground and protected from exposure to harmful weather conditions and at temperature conditions recommended by the manufacturer in accordance with

1.09 SITE CONDITIONS

.1 Do not install sealants when ambient temperature is less than 5ºC.

.2 Maintain this minimum temperature during and 24 hours after installation of sealants.

1.10 WASTE MANAGEMENT AND DISPOSAL

.1 Cooperate with the waste management coordinator in the implementation of the waste management plan specified in Division 01, General and Supplementary

conditions of the Contract.

.2 Handle and dispose of waste materials, including packaging materials, generated by the *Work* of this section in accordance with the waste management plan.

1.11 WARRANTY

.1 See Division 01, General and Supplementary conditions of the Contract, for additional warranty requirements.

.2 For the *Work* of this Section, the warranty prescribed in Division 01 - General Conditions of the *Contract* is extended to ten (10) years.

.3 Correct defective *Work* within a ten (10) year period after the Date of *Ready-For-Takeover*.

.4 Provide a ten (10) year manufacturer warranty against failure of glass seal on insulating glass units, including interpane dusting or misting. Include provision for replacement of failed units.

.5 Provide a ten (10) year manufacturer warranty against excessive degradation of the exterior finish. Include provision for replacement of units with excessive fading, chalking, or flaking.

PART 2 PRODUCTS

2.01 MANUFACTURERS

.1 This specification is based on aluminum framed *Products* by Kawneer.

.2 Subject to compliance with specified requirements, equivalent *Products* by the following manufacturers are acceptable alternatives:

.1 Kingspan
.2 Alumicor.
.3 Commdoor,
.4 Concord.
.5 Windspec.

.3 Requests for substitutions will be considered in accordance with provisions of Division 01, General and Supplementary conditions of the Contract. Acceptance of alternative *Products* is subject to the approval of the *Consultant*.

2.02 PERFORMANCE REQUIREMENTS

.1 General Performance: The aluminum-framed windows shall meet the following performance requirements without failure due to defective manufacture, fabrication, installation, or other construction defects.

.2 Window performance requirements:

.1 Provide windows that comply with AAMA/WDMA/CSA 101/I.S.2/A440(NAFS), Performance Class and Grade AW-PG70-FW.

.2 Wind loads: Provide a window system, including anchorage, capable of withstanding wind load design pressures of 1.2 kPa inward and outward. The design pressures are based on the Ontario Building Code, current edition.

.3 Air Infiltration: The test specimen shall meet the Fixed rating of less than 0.25 (m^3/h)/m at 75 Pa when tested in accordance with AAMA/WDMA/CSA 101/I.S.2/A440 Windows.

.4 Water Resistance: The test specimen shall meet the B7 rating with no water leakage at 720 Pa) when tested in accordance with AAMA/WDMA/CSA 101/I.S.2/A440 Windows.

.5 Uniform Load Deflection: The test specimen shall meet the C5 rating when tested in accordance with AAMA/WDMA/CSA 101/I.S.2/A440 Windows.

.6 Uniform Load Structural: A minimum static air pressure difference of 105 5028 Pa) shall be applied in the positive and negative direction in accordance with ASTM E330/E330M. The unit shall be evaluated after each load with permanent set not to exceed 0.2% of span length.

.7 Component Testing: Window components shall be tested in accordance with procedures described in AAMA/WDMA/CSA 101/I.S.2/A440 (NAFS) and AAMA 910.

.8 Energy Efficiency:

.1 Thermal Transmittance (U-Factor): When tested to AAMA 1503, AAMA 507 or NFRC 100 with the specified glazing the thermal transmittance (U-Factor) shall not be more than 31 BTU/hr/ft^2/^{o}F.

.9 Condensation Resistance Factor (CRF): When tested for thermal performance according to AAMA 1503, windows shall have a CRF not less than 77_{frame} and 72_{glass}.

.10 Temperature Index (I): When tested for thermal performance according to AAMA/WDMA/CSA 101/I.S.2/A440 windows shall have a Temperature Index (I) not less than 73_{frame} and 66_{glass}.

.11 Sound Transmission Class (STC) and Outdoor-Indoor Transmission Class (OITC): When tested in accordance with AAMA 1801 with the specified glazing, the STC shall not be less than 38 and the OITC shall not be less than 32.

.12 Forced Entry Resistance: All windows shall conform to ASTM F588, Grade 10.

.13 Thermal Barrier Test: The thermal break shall be designed in accordance with AAMA TIR-A8 and tested in accordance with AAMA 505.

2.03 WINDOWS

.1 Aluminum Windows: Fixed windows with extruded aluminum frame. factory fabricated, factory finished, thermally broken, with related flashings, and anchorage and attachment devices.

.2 Subject to compliance with Specifications requirements, equivalent products by Kingspan are acceptable alternatives.

.3 Standard of acceptance: 1600 Curtain Wall Series by Kawneer as follows;

.1 Frame Depth: 152 mm.

.2 Fabrication: Joints and corners flush, hairline, and weatherproof, accurately fitted and secured; prepared to receive anchors; fasteners and attachments concealed from view; reinforced as required for imposed loads.

.3 Perimeter Clearance: Minimize space between framing members and adjacent construction while allowing for expected movement.

.4 Movement: Accommodate movement between the window and perimeter framing and deflection of the lintel, without damage to components or

deterioration of seals.

.5 System Internal Drainage: Drain water entering joints, condensation occurring in glazing channel, and migrating moisture occurring within system to the exterior by means of a weep drainage network.

.6 Thermal Movement: Design to accommodate thermal movement caused by 90°C surface temperature without buckling stress on glass, joint seal failure, damaging loads on structural elements, damaging loads on fasteners, reduction in performance or other detrimental effects.

2.04 FINISHES

.1 Aluminum surfaces

.1 Finish exterior and interior aluminum surfaces with electrolytically deposited clear anodic finish, designation AA M10C22A41, Architectural Class I, in accordance with AA DAF-45.

.2 Prior to application of finish:

.1 Notching and welding to be completely executed.

.2 Exposed surfaces to be fine satin finished to ensure elimination of extrusion die marks and fabrication marks and to ensure uniformity of finish.

.3 Factory finish surfaces that will be exposed in completed assemblies.

.2 Steel clips and reinforcement: 380 g/m^2 zinc coating to ASTM A123/A123M.

.1 Isolate aluminum from the following components by a heavy coating of bituminous coating:

.2 Dissimilar metals except stainless steel, zinc or white bronze in small area.

.3 Concrete, mortar and masonry.

.4 Wood.

PART 3 EXECUTION

3.01 EXAMINATION

.1 Examine areas and conditions under which work is to be performed and notify the *Consultant* in writing of conditions detrimental to the proper and timely completion of the *Work.*

.2 Verify substrate conditions are acceptable for *Product* installation in accordance with the manufacturer's instructions.

.3 Verify dimensions, tolerances, and method of attachment with other related work.

.4 Verify that wall openings and adjoining air and vapour seal materials are ready to receive *Work* of this section.

.5 Verify that anchorage devices have been properly installed and located.

.6 Field Measurements:

.1 Verify actual measurements/openings by field measurements before fabrication.

.2 Show recorded measurements on *Shop Drawings*.

.3 Coordinate field measurements, fabrication schedule with construction progress to avoid construction delays.

.7 Do not proceed with the installation until unsatisfactory conditions have been corrected to the satisfaction of the installer.

.8 Commencement of the installation will be construed as acceptance of the site conditions and, thereafter, the *Contractor* shall be fully responsible for satisfactory work as specified herein.

3.02 INSTALLATION

.1 Install windows in accordance with reviewed and accepted *Shop Drawings* and the manufacturer's instructions.

.2 Install the window assembly in accordance with AAMA/WDMA/CSA 101/I.S.2/A440.

.3 Attach the window frame and shims to the perimeter opening to accommodate construction tolerances and other irregularities.

.4 Align the window plumb and level, free of warp or twist. Maintain dimensional tolerances and alignment with adjacent work.

.5 Install the sill and sill end angles.

.6 Set sill members and sill flashing in a continuous bead of sealant.

.7 Provide thermal isolation where components penetrate or disrupt the ilding insulation.

.8 Install glass and infill panels in accordance with Section 08 80 00 - Glazing .

3.03 TOLERANCES

.1 Maximum Variation from Level or Plumb: 1.5 mm/m non-cumulative or 3 mm/3 m, whichever is less.

3.04 RELATED PRODUCTS INSTALLATION REQUIREMENTS

.1 Sealants (Perimeter): Refer Section 07 92 00 - Joint Sealants.

.2 Glass: Refer to Section 08 80 00 - Glazing .

3.05 AIR/VAPOUR, INSULATION AND INSULATING SEAL

.1 Ensure complete air/vapour barrier continuity with the window and at the interface between the wind and adjacent construction. Incorporate membrane air barrier transition strips as specified in Section 07 27 16 - Permeable Air/Moisture Barrier **.

.2 Coordinate with Section 07 21 00 - Board and Batt Insulation and fill voids with insulation as indicated. Where voids cannot be filled with specified batt or board insulation, inject polyurethane foam insulating sealant as specified in Section 07 21 19 - Spray-Applied Urethane Foam Insulation.

3.06 CAULKING

.1 Seal the perimeter of the window framing against adjacent materials, on the interior and exterior.

.2 Colour of exposed sealant to match finish, to the approval of the *Consultant.*

3.07 SITE QUALITY CONTROL

.1 Provide *Services* of the aluminum window manufacturer's site representative to observe for proper installation of the system and submit a report.

.2 Engage a qualified independent testing and inspecting agency to perform site tests and inspections and prepare test reports.

.3 Tests and inspections of representative areas shall determine compliance of installed windows with specified requirements as directed by the *Consultant.*

.4 Provide Site testing of installed aluminum windows by a qualified independent laboratory in accordance with AAMA 502 and AAMA/WDMA/CSA 101/I.S.2/A440 during construction process and before installation of interior finishes.

.1 Site test for water penetration in accordance with ASTM E1105 using Procedure B - cyclic static air pressure difference; test pressure shall not be less than 91 Pa.

.2 Site test for air leakage in accordance with ASTM E783 with uniform static air pressure difference of 75 Pa.

.1 Maximum allowable rate of air leakage is 1.5 times specified rate of 0.5 L/s sq m as indicated in AAMA/WDMA/CSA 101/I.S.2/A440.

.5 Repair or replace fenestration components that have failed designated site testing, and retest to verify performance complies with specified requirements.

.6 Additional testing and inspecting, at the *Contractor's* expense, shall be performed to determine compliance of replaced or additional work with specified requirements.

3.08 CLEANING

.1 Remove protective material from factory finished aluminum surfaces.

.2 Wash surfaces by the method recommended and acceptable to the window manufacturer; rinse and wipe surfaces clean.\

.3 During and after installation, protect the *Work* of this section from damage. Protect the aluminum window from damage from grinding and polishing compounds, plaster, lime, acid, cement, or other harmful contaminants.

.4 Remove all corrosive or foreign material or droppings resulting from the work of this or other trades.

.5 Make good damage caused by the *Work* of this Section. Repair or replace damaged installed *Products.*

.6 Clean installed *Products* in accordance with the manufacturer's instructions prior to *Ready-For-Takeover.*

.7 Remove construction debris from the *Project* site and legally dispose of debris.

.8 Remove protective material from pre-finished aluminum surfaces.

.9 Upon completion of installation, thoroughly clean aluminum surfaces in accordance with AAMA 609 & 610.

3.09 PROTECTION

.1 Protect installed *Products* from damage until the date of *Ready-For-Takeover.*

END OF SECTION 08 51 13

SECTION 08 71 10
DOOR HARDWARE

PART 1 GENERAL

1.01 RELATED DOCUMENTS

.1 Drawings and general provisions of the Contract, including General and Supplementary Conditions and Division 1 Specification Sections, apply to this Section.

1.02 SUMMARY OF WORK

.1 Work Included: The work of this Section includes the provision of all labour, materials, equipment and services required to provide finish door hardware, as indicated on the drawings, as specified herein and as required for a complete project.

1.03 RELATED REQUIREMENTS

.1 Section 08 11 13 - Hollow Metal Doors and Frames
.2 Section 08 71 11 - Door Hardware Schedule (Refer to Drawings) *
.3 Section 08 71 13 - Automatic Swing Door Operators *
.4 Section 06 41 93 - Cabinet and Miscellaneous Hardware *
.5 Section 09 21 16 - Gypsum Board Assemblies
.6 Section 10 28 10.02 - Restroom Barrier Free Door Control *
.7 Section 10 28 10.03 - Appendix A - Restroom Control Kit * (6 pages attached)

1.04 REFERENCE STANDARDS

.1 BHMA (CPD) - Certified Products Directory 2017.
.2 BHMA A156.1 - American National Standard for Butts and Hinges 2016.
.3 BHMA A156.2 - American National Standard for Bored and Preassembled Locks & Latches 2017.
.4 BHMA A156.3 - American National Standard for Exit Devices 2014.
.5 BHMA A156.4 - American National Standard for Door Controls - Closers 2013.
.6 BHMA A156.5 - American National Standard for Cylinders and Input Devices for Locks 2014.
.7 BHMA A156.6 - American National Standard for Architectural Door Trim 2015.
.8 BHMA A156.7 - American National Standard for Template Hinge Dimensions 2016.
.9 BHMA A156.8 - American National Standard for Door Controls - Overhead Stops and Holders 2015.
.10 BHMA A156.12 - American National Standard for Interconnected Locks 2013.
.11 BHMA A156.13 - American National Standard for Mortise Locks & Latches Series 1000 2017.
.12 BHMA A156.14 - American National Standard for Sliding and Folding Door Hardware 2013.
.13 BHMA A156.15 - American National Standard for Release Devices - Closer Holder, Electromagnetic and Electromechanical 2015.
.14 BHMA A156.16 - American National Standard for Auxiliary Hardware 2013.

.15 BHMA A156.17 - American National Standard for Self Closing Hinges & Pivots 2014.
.16 BHMA A156.18 - American National Standard for Materials and Finishes 2016.
.17 BHMA A156.20 - American National Standard for Strap and Tee Hinges, and Hasps 2006 (Reaffirmed 2012).
.18 BHMA A156.21 - American National Standard for Thresholds 2014.
.19 BHMA A156.22 - American National Standard for Door Gasketing and Edge Seal Systems, Builders Hardware Manufacturers Association 2017.
.20 BHMA A156.23 - American National Standard for Electromagnetic Locks 2010.
.21 BHMA A156.24 - American National Standard for Delayed Egress Locking Systems 2012.
.22 BHMA A156.25 - American National Standard for Electrified Locking Devices 2013.
.23 BHMA A156.26 - American National Standard for Continuous Hinges 2012.
.24 BHMA A156.28 - American National Standard for Recommended Practices for Mechanical Keying Systems 2013.
.25 BHMA A156.30 - American National Standard for High Security Cylinders 2014.
.26 BHMA A156.31 - American National Standard for Electric Strikes and Frame Mounted Actuators 2013.
.27 BHMA A156.36 - American National Standard for Auxiliary Locks 2016.
.28 BHMA A156.115 - American National Standard for Hardware Preparation in Steel Doors and Steel Frames 2016.
.29 BHMA A156.115W - Hardware Preparation in Wood Doors with Wood or Steel Frames 2006.
.30 CAN/ULC S104 - Standard Method for Fire Tests of Door Assemblies 2010.
.31 CSA B651 - Accessible Design for the Built Environment 2018.
.32 CSA C22.1 - Canadian Electrical Code, Part 1 (25th Edition), Safety Standard for Electrical Installations 2021.
.33 NFC - National Fire Code of Canada 2015, with Errata (2018).
.34 NFPA 80 - Standard for Fire Doors and Other Opening Protectives 2016.
.35 UL 10C - Standard for Positive Pressure Fire Tests of Door Assemblies Current Edition, Including All Revisions.
.36 UL 437 - Standard for Key Locks Current Edition, Including All Revisions.
.37 ULC (DIR) - Online Certifications Directory (Canada) Current Edition.
.38 Canadian Steel Door and Frame Manufacturers' Association (CSDFMA):
.1 Standard hardware location dimensions in accordance with Canadian Metric Guide for Steel Doors and Frames (Modular Construction).

1.05 SUBMITTALS

.1 See Division 01 - General & Supplementary Requirements, for submittal procedures.
.2 Product Data: Manufacturer's catalog literature for each type of hardware, marked to clearly show products to be supplied for this project, and includes construction details, material descriptions, finishes, and dimensions and profiles of individual components.

.3 Hardware Schedule:
- .1 Provide a complete Door Hardware Schedule for the Project.
- .2 Pay the cost of preparation of the Hardware Schedule and include in the *Contract Price*.
- .3 Clearly indicate hardware proposed, including make, model, material, function, finish and all other pertinent information.
- .4 The *Contractor* and the *Consultant*'s review of the Hardware Schedule does not limit or release the *Contractor* from the responsibility to provide all necessary hardware and related components required for a complete installation as required by the authorities having jurisdiction.

.4 Samples: If requested by the *Consultant*, submit samples and technical literature as necessary to fully inform the *Consultant* regarding new hardware items proposed.

.5 Shop Drawings - Door Hardware Schedule: Submit detailed listing that includes each item of hardware to be installed on each door. Use door numbering scheme as included in Contract Documents.
- .1 Provide complete description for each door listed.
- .2 Provide manufacturer's and product names, and catalog numbers; include functions, types, styles, sizes and finishes of each item.
- .3 Include account of abbreviations and symbols used in schedule.

.6 Shop Drawings - Electrified Door Hardware: Submit diagrams for power, signal, and control wiring for electrified door hardware that include details of interface with building safety and security systems. Provide elevations and diagrams for each electrified door opening as follows:
- .1 Electrified Door Hardware installation shall be designed by an Electrical Engineer permanently licensed to practice in the province of the location of the project and who is experienced in providing engineering services of the kind indicated. Each shop drawing submitted shall bear the stamp and signature of the aforesaid electrical engineer.
- .2 Installation of Electrified Door Hardware to be reviewed and signed-off by the designing engineer to ensure conformity with shop drawing design.
- .3 Elevations: Submit front and back elevations of each door opening showing electrified devices with connections installed and an operations narrative describing how opening operates from either side at any given time.
- .4 Diagrams: Submit point-to-point wiring diagram that shows each device in door opening system with related coloured wire connections to each device.

1.06 QUALITY ASSURANCE

.1 Manufacturer Qualifications: Company specializing in manufacturing products specified in this section with minimum five (5) years of documented experience.

.2 Installer Qualifications: Company specializing in performing work of the type specified for commercial door hardware with at least five (5) years of documented experience.

.3 Supplier Qualifications: Company with certified Architectural Hardware Consultant (AHC) and Electrified Hardware Consultant (EHC) to assist in work of this section.

1.07 DELIVERY, STORAGE, AND HANDLING

.1 Package hardware items individually; label and identify each package with door opening code to match door hardware schedule.

1.08 COORDINATION WITH OTHER TRADES

.1 Submit template information to all manufacturers and trades who have finish hardware applied to their products.

1.09 WASTE MANAGEMENT AND DISPOSAL

.1 Cooperate with the Waste Management Coordinator in the implementation of the Waste Management Plan specified in Division 01, General and Supplementary Conditions of the Contract.

.2 Handle and dispose of waste materials generated by the work of this Section in accordance with the Waste Management Plan.

1.10 WARRANTY

.1 See Division 01, General and Supplementary conditions of the Contract, for additional warranty requirements.

.2 For the Work of this Section, the warranty prescribed in the General Conditions of the Contract is extended to five (5) years.

PART 2 PRODUCTS

2.01 DESIGN AND PERFORMANCE CRITERIA

.1 Provide specified door hardware as required to make doors fully functional, compliant with applicable codes, and secure to extent indicated.

.2 Provide individual items of single type, of same model, and by same manufacturer.

.3 Provide door hardware products that comply with the following requirements:

- .1 Applicable provisions of Building codes of the Province of the Project.
- .2 Accessibility: CSA B651.
- .3 Applicable provisions of the NFC.
- .4 Fire-Rated Doors: NFPA 80, listed and labeled by qualified testing agency for fire protection ratings indicated, based on testing at positive pressure in accordance with CAN/ULC S104.
- .5 Hardware on Fire-Rated Doors: Listed and classified by ULC (DIR) or testing firm acceptable to authorities having jurisdiction as suitable for application indicated.
- .6 Listed and certified compliant with specified standards by BHMA (CPD).
- .7 Auxiliary Hardware: BHMA A156.16.
- .8 Straps and Tee Hinges: BHMA A156.20.
- .9 Hardware Preparation for Steel Doors and Steel Frames: BHMA A156.115.
- .10 Products Requiring Electrical Connection: Listed and classified by ULC (DIR) as suitable for the purpose specified.

.4 Electrically Operated and/or Controlled Hardware: Provide necessary power supplies, power transfer hinges, relays, and interfaces as required for proper operation; provide wiring between hardware and control components and to

building power connection in compliance with CSA C22.1.

.5 Fasteners:

.1 Provide fasteners of proper type, size, quantity, and finish that comply with commercially recognized standards for proposed applications.

.1 Aluminum fasteners are not permitted.

.2 Provide phillips flat-head screws with heads finished to match door surface hardware unless otherwise indicated.

.2 Fire-Rated Applications: Comply with NFPA 80.

.3 Provide wood or machine screws for hinges mortised to doors or frames, strike plates to frames, and closers to doors and frames.

.4 Provide steel through bolts for attachment of surface mounted closers, hinges, or exit devices to door panels unless proper door blocking is provided.

.5 Concealed Fasteners: Do not use through or sex bolt type fasteners on door panel sides indicated as concealed fastener locations, unless otherwise indicated.

2.02 HARDWARE ITEMS

.1 Products: Provide complete finishing hardware in accordance with 08 71 11 - Door Hardware Schedule (Refer to Drawings) *. Do not order any item until it has been approved by the *Consultant.*

.2 Fasteners:

.1 Provide manufacturer's recommended tamper-proof fasteners throughout.

.2 Expansion shields shall be of double cinch anchor/type.

.3 Fasteners shall be ferrous or non-ferrous to match the product being applied.

.4 Length of fasteners shall be sufficient to afford adequate thread engagement.

.3 Specific hardware requirements are indicated on the *Drawings.*

2.03 SUPPLIERS

.1 Basis of Design: Door hardware as manufactured and supplied by Stanley Security Solutions: stanleyhardwarefordoors.com

.2 Acceptable Alternate Manufacturers: Subject to compliance with requirements specified in this Section, manufacturers offering products that may be incorporated:

.1 Allegion Canada http://allegion.ca.

.2 Assa Abloy http://www.assaabloy.ca/en/local/ca.

.3 Dormakaba Group https://www.dormakaba.com.

.3 Additional alternates will not be considered. In the event products from unacceptable manufacturers are accepted and installed by the *Contractor,* it will be the responsibility of the *Contractor* to correct at no additional cost.

2.04 MANUFACTURERS

.1 Hinges: Stanley

.2 Latch Sets: BEST

.3 Push/Pulls: Standard Metal

.4 Cylinder Locks: BEST.
.5 Exit Devices: PHI.
.6 Closers: Stanley.
.7 Overhead Holders: ABH.
.8 Manual and/or Automatic Bolts: ABH.
.9 Gasketing: KN Crowder.
.10 Sliding Door Hardware: KN Crowder.
.11 Bifolding Door Hardware: KN Crowdder.
.12 Protection Plates: Standard Metal

2.05 KEYS, KEYING - CONFIRM WITH OWNER PRIOR TO ORDERING:

.1 Provide Consruction cylinders as required.
.2 Door Locks: Grand master keyed.
.3 Include control keying with removable core cylinders.
.4 Confirm quantity of Keys, type of Keying and Master Keys required by *Owner* prior to ordering door hardware.

2.06 FINISHES

.1 As per Finish Schedule.

PART 3 EXECUTION

3.01 EXAMINATION

.1 Verify that doors and frames are ready to receive this work; labeled, fire-rated doors and frames are properly installed, and dimensions are as indicated on Shop Drawings.
.2 Verify that electric power is available to power operated devices and of correct characteristics.

3.02 INSTALLATION

.1 [if !supportFields]Generally, the installation of door hardware is by the door installers. Refer to PART 1 GENERAL: Related Sections.
.2 Install hardware in accordance with manufacturer's instructions and applicable codes.
.3 Use templates provided by hardware item manufacturer.
.4 Door Hardware Mounting Heights: Distance from finished floor to center line of hardware item; see drawings.
.5 Set exterior door thresholds with full-width bead of elastomeric sealant at each point of contact with floor providing a continuous weather seal; anchor thresholds with stainless steel countersunk screws.

3.03 ADJUSTING

.1 Adjust work under provisions of Division 01, General and Supplementary conditions of the Contract.
.2 Adjust hardware for smooth operation.

.3 Adjust gasketing for complete, continuous seal; replace if unable to make complete seal.

3.04 PROTECTION

.1 Protect finished Work under provisions of Division 01, General and Supplementary conditions of the Contract.

.2 Do not permit adjacent work to damage hardware or finish.

END OF SECTION 08 71 10

This page intentionally left blank

SECTION 08 71 11
DOOR HARDWARE SCHEDULE (REFER TO DRAWINGS) *

REFER TO DRAWINGS FOR DOOR & HARDWARE SCHEDULE

END OF SECTION 08 71 11

This page intentionally left blank

SECTION 08 71 13
AUTOMATIC SWING DOOR OPERATORS *

PART 1 - GENERAL

1.01 RELATED DOCUMENTS

.1 *Drawing*s and general provisions of the *Contract,* including General and Supplementary Conditions, and Division 01 *Specifications* sections, apply to this section.

1.02 WORK INCLUDED

.1 The *Work* of this section includes the provision of all labour, materials, equipment and services required to install automatic door operators, as indicated on the *Drawings*, as specified herein and as required for a complete *Project*.

1.03 RELATED WORK

.1 Section 08 11 13 - Hollow Metal Doors and Frames

.2 Section 08 71 10 - Door Hardware

1.04 REFERENCE STANDARDS

.1 ANSI 117 - Standard Specifications for Structural Glued Laminated Timber of Softwood Species 2015.

.2 BHMA A156.10 - American National Standard for Power Operated Pedestrian Doors 2017.

.3 BHMA A156.19 - American National Standard for Power Assist and Low Energy Power Operated Doors 2013.

.4 ICC A117.1-2009 - Accessible and Usable Buildings and Facilities 2009.

.5 National Fire protection Association (NFPA 101): Code for Safety to Life from Fire in Buildings & Structures.

.6 The Aluminum Association (AA): Aluminum Finishes Manual.

.7 Underwriters Laboratory Inc. (USA & CANADA) UL 325: Electrical Door, Drapery, Gate, Louver, and Window Operators and Systems.

.8 Builders Hardware Manufacturers Association (BHMA (CPD))

.9 ICC A117.1-2009 - Accessible and Usable Buildings and Facilities; 2009

.10 American National Standards Institute (ANSI)

.11 OBC - Ontario Building Code (Regulation 332/12); 2012

1.05 SUBMITTALS

.1 General: Submit each item in this Article as specified in Division 01, General and Supplementary conditions of the *Contract*.

.2 *Product Data:*

  .1 Include material descriptions, dimensions of individual components and profiles and finishes.

  .2 Include installation instructions.

.3 Provide operations and maintenance information in accordance with Section 08 71 10 - Door Hardware – Close out Submittals.

.4 Warranty: Submit manufacturer warranty completed in the *Owner*'s name and registered with the manufacturer.

.5 Warranty: Submit installers warranty completed in the *Owner*'s name

.6 Installers Qualification Statement

.7 Manufacturer's Qualification Statement

.8 *Shop Drawings:*

.1 Indicate requirements for preparation of doors and frames to receive automatic operators.

.2 Include electrical power requirements and wiring diagrams.

.3 The electronic door hardware *Shop Drawings* to be prepared by or under supervision of an Architectural Hardware Consultant (AHC) and an Electronic Hardware Consultant (EHC).

.4 The Automatic Door Operator installtion to be reviewed and signed off by the designing AHC and/or EHC to ensure conformity with shop drawing design.

1.06 QUALITY ASSURANCE

.1 Conform to ULC and Building Code requirements, as applicable to hardware, for labeled or rated doors and frames, and for exiting, operation and function.

.2 Only products listed in the BHMA Directory of Certified Products shall be used for hardware of this *Project*.

.3 Manufacturer to have minimum (5) five years of proven ULC, CSA approved installation of specified operators and controls.

.4 Installer: Have minimum (5) five years successful experience in the installation of automatic door operators supplied by manufacturer.

1.07 PREINSTALLATION CONFERENCE

.1 Convene a pre-installation meeting at the *Project* site with the following in attandance:

.1 *Contractor.*

.2 *Consultant.*

.3 Architectural Hardware Consultant (AHC) responsible for the Door Hardware Schedule.

.4 Hardware Installers.

.5 Owner's Security Consultant

.2 Agenda:

.1 Review and discuss electrical roughing in and other preparatory work to be performed by other trades.

.2 Review the sequence of operation for each type of electronic door hardware.

.3 Review and finalize the construction schedule and verify the availability of materials, Installer's personnel, equipment, and facilities needed to make progress and avoid delays.

.4 Review the required testing, inspecting, and certifying procedures.

1.08 DELIVERY, STORAGE AND HANDLING

.1 Deliver hardware items in original factory containers, clearly labeling contents and scheduled use for this *Project.*

.2 Inventory door operators on receipt and provide secure lock up for door hardware delivered to *Project* site.

.3 Store hardware in a clean, well illuminated (500 lux minimum) securely locked storage room accessible only to authorized personnel.

.4 Store hardware items on shelves (not on floors) separated and packaged as a group for each individual door with the door number, and list of items for that door on each package related to the door hardware schedule, and include basic installation instructions with each item or package.

1.09 COORDINATION

.1 Coordinate with other work to ensure that adequate provisions are made for locating and installing door operators.

.2 Coordinate with Division 26 - Electrical for power requirements for electronic hardware and installation schedule

.3 Coordinate the layout and installation of electronic door hardware with connections to power supply, fire alarm system, detection devices, access control system, security system and building control system.

1.10 MAINTENANCE MATERIALS

.1 Provide maintenance data for incorporation into the operation and maintenance manual specified in Division 01, General and Supplementary conditions of the *Contract.*

.2 Furnish a complete set of *Owner*'s manual for purpose of daily safety inspection.

1.11 WASTE MANAGEMENT AND DISPOSAL

.1 Cooperate with the waste management coordinator in the implementation of the waste management plan specified in Division 01, General and Supplementary conditions of the *Contract.*

.2 Handle and dispose of waste materials, including packaging materials, generated by the *Work* of this section in accordance with the waste management plan.

1.12 WARRANTY

.1 See Division 01, General and Supplementary conditions of the *Contract*, for additional warranty requirements.

.2 Provide written warranty, executed by manufacturer agreeing to repair or replace components that fail in materials or workmanship within specified warranty period.

.1 Failures include, but are not limited to, the following:

.1 Faulty operation of operators and door hardware.

.2 Deterioration of metals, metal finishes, and other materials beyond normal weathering.

.3 Warranty Period: From date of *Ready-For-Takeover*, and as follows:

.1 In addition to the warranty prescribed in the general conditions of the *Contract,* provide a written warranty, executed by the *Manufacturer*

agreeing to repair or replace components that fail in materials or workmanship within two (2) years from the date of *Ready-For-Takeover.*

PART 2 - PRODUCTS

2.01 ACCEPTABLE MANUFACTURERS

.1 The specification is based on one of the following;

.1 Surface mounted operators for exterior and interior vestibules entrances:

.1 Stanley Access Technologies, "Magic-Force Series". https://www.stanleyaccess.com

.2 Assa Abloy, “Besam SW100 or SW200i”. Contact Information: 1-866-237-2687 | specdesk.na.besam@assaabloy.com

.3 Horton Automatics, "Series 4000 LE". Contact information in Ontario: John Taweel 1-800-866-9523

.4 Rhinotek,”Rhino Ado7000” Contact Info: 1-416-526-9077

.5 Dorma

.6 Nabco Entrance Inc.

.2 Requests for *Substitutions* will be considered in accordance with the provisions of Division 01, General and Supplementary conditions of the *Contract*. Acceptance of alternative *Products* is subject to the approval of the *Consultant.*

2.02 ELECTRICAL POWER REQUIREMENTS

.1 Provide 120 volt, 60 cycle, single phase 15 ampere service for 1-2 operators, 30 ampere service for 3-4 operators, and as follows:

.1 Coordinate with electrical *Contractor* for provision of service to each operator from junction box for multiple operators.

.2 Coordinate with electrical *Contractor* shall provide electrical conduit and wiring from specified controls to operators as outlined on Manufacturer's drawings.

2.03 EQUIPMENT

.1 Furnish and install only a concealed electro-mechanical swing door operator and, consisting of electro-mechanical swinging door operator and electronic control, aluminum header, connecting hardware, and power on/off switch and safety sensor, and as follows: (ANY HYDRAULIC COMPONENTS NOT ACCEPTABLE.)

.1 Automatic entrance equipment: comply with ANSI/BHMA A156.10 or ANSI/BHMA A156.19

.2 Aluminum header extrusions: minimum nominal 4mm (0.156”) wall thickness with finish to match adjacent aluminum materials **AND TO BE FULL WIDTH OF DOOR OPENING.**

.3 Equipment must operate between -35.C (-30.F) and +55.C (+130.F) in all climate conditions.

.4 Operator: Electro-mechanical system installed in a header to resist dust, dirt and corrosion; entire operator shall be removable from the header as a unit.

.5 Bearings: Fully lubricated and sealed to minimize wear and friction.

.2 Operator: Open the door only with a 1/8 HP Electro-mechanical motor, only through reduction gears, to the output shaft, and as follows:
  .1 Low energy operator, door opening time: not be less than 4 seconds.
  .2 The drive train shall have a positive, constant engagement. The operator shall stop the door in the open position by electrically reducing the motor voltage and stalling against a 90. stop.
  .3 Close the door by spring energy; controlled by employing the motor as a dynamic brake.
  .4 Door closing time shall not be less then 4.5 seconds.
  .5 Pre-load closing spring for positive closing action at a low material stress level for long spring life.
  .6 The operator shall function as a manual door closer in the direction of swing with or without electrical power.
.3 The door forces and speeds generated during power opening, and manual opening in both directions of swing, and spring closing in both directions of swing shall conform to the requirements of ANSI/BHMA A156.10 or ANSI/BHMA A156.19

2.04 OPERATING EQUIPMENT (AUTOMATIC AND/OR MANUAL)

.1 Automatic: Pushbutton switch actuates door open; door closes after time delay expires.
  .1 Opening and closing force, measured 25.4 mm out from the lock stile of the door, not to exceed 15 pounds (67 N) of force to stop the door when operating in either direction.
  .2 Operator to include the following variable adjustments so as to comply with ANSI/BHMA A156.19:
    .1 Opening speed - 4 to 6 seconds;
    .2 Closing speed - 4 to 6 seconds.
.2 Manual: Manually pushing door activates automatic opening cycle; door closes after time delay expires (approximately 30% less than after pushbutton actuation).
.3 Activating Device: Located on each side of the opening device, as per ICC A117.1-2009 or ANSI Safety Standard ANSI 117.
  .1 Push plate: 152 mm diameter round, stainless steel switch.
  .2 Locate pushbutton and push plate at height and locations indicated on the *Drawings*.

2.05 AUTOMATIC SLIDING DOORS:

.1 Refer to Section 08 32 00 - Sliding Glass Doors

PART 3 - EXECUTION

3.01 EXAMINATION

.1 Examine areas and conditions under which work is to be performed and notify the *Consultant* in writing of conditions detrimental to the proper and timely completion of the *Work.*
.2 Ensure that backing and structural support required for hardware has been provided by door and frame suppliers during fabrication.

.3 Do not proceed with the *Work* until unsatisfactory conditions have been corrected to the satisfaction of the installer.

.4 Commencement of the installation will be construed as acceptance of the site conditions and, thereafter, the *Contractor* shall be fully responsible for satisfactory *Work* as specified herein.

3.02 INSPECTION

.1 Inspect doors and frames prepared by others and ensure they are adequate to receive required hardware.

3.03 INSTALLATION - GENERAL

.1 Install all hardware items to *Manufacturer's i*nstructions and recommendations.

.2 Space fasteners and anchors to the *Manufacturer's* recommendations.

.3 Drill and countersink units which are pre-prepared for anchorage of fasteners. Space fasteners and anchors to *Manufacturer's* recommendations.

.4 Install hardware to heights and centres as indicated in reviewed *Shop Drawings.* Ensure heights and centres are as recommended by the *Manufacturer* and in compliance with the applicable building code.

.5 Set all components level, plumb and true to line and location.

.6 Protect doors and frames from damage due to installation of hardware.

3.04 ADJUSTMENT

.1 During installation and upon completion, adjust hardware to ensure correct and smooth operation.

.2 Adjust closer speeds to provide positive and quiet latching and back checking. Set closers to provide maximum degree of opening without interference.

3.05 CLEANING

.1 Remove all protective coatings prior to *Ready-For-Takeover.*

.2 Clean and polish all hardware.

.3 Remove and replace any scratched, marred or damaged hardware.

.4 Remove from the permises all surplus material, dirt and debris caused by the Work of this section and leave the installation clean.

.5 Make good damage to other work caused by the *Work* of this section.

3.06 PROTECTION

.1 Protect installed hardware from damage until *Ready-For-Takeover.*

.2 Do not permit adjacent work to damage hardware or finish.

END OF SECTION 08 71 13

SECTION 08 80 00
GLAZING

PART 1 GENERAL

1.01 RELATED DOCUMENTS

.1 *Drawings* and general provisions of the *Contract*, including General and Supplementary Conditions, and Division 01 *Specifications* sections, apply to this section.

1.02 SUMMARY OF WORK

.1 *Work* Included: The *Work* of this section includes the provision of all labour, materials, equipment and services required to supply and install glazing, as indicated on the *Drawings*, as specified herein and as required for a complete *Project.*

.2 Section Includes:

.1 Insulating glass units.

.2 Glazing units.

.3 Plastic films.

1.03 RELATED REQUIREMENTS

.1 Section 06 41 16 - Plastic-Laminate-Clad Wood Casework: Cabinets with requirements for glass shelves.

.2 Section 07 27 16 - Permeable Air/Moisture Barrier **

.3 Section 07 27 13 - Non-permeable Air/Moisture/Vapour Barrier **

.4 Section 07 92 00 - Joint Sealants: Sealants for other than glazing purposes.

.5 Section 08 11 13 - Hollow Metal Doors and Frames: Glazed lites in doors.

.6 Section 08 43 13 - Aluminum-Framed Storefronts: Glazing provided as part of storefront assembly.

.7 Section 08 44 13 - Glazed Aluminum Curtain Walls: Glazing provided as part of wall assembly.

.8 Section 08 44 35 - Protective Framed Glazing Assemblies: Glazing fire-tested as part of the wall assembly.

1.04 REFERENCE STANDARDS

.1 16 CFR 1201 - Safety Standard for Architectural Glazing Materials current edition.

.2 ANSI Z97.1 - American National Standard for Safety Glazing Materials Used in Buildings - Safety Performance Specifications and Methods of Test 2015.

.3 ASTM C864 - Standard Specification for Dense Elastomeric Compression Seal Gaskets, Setting Blocks, and Spacers 2005 (Reapproved 2019).

.4 ASTM C920 - Standard Specification for Elastomeric Joint Sealants 2018.

.5 ASTM C1036 - Standard Specification for Flat Glass 2021.

.6 ASTM C1048 - Standard Specification for Heat-Strengthened and Fully Tempered Flat Glass 2018.

.7 ASTM C1172 - Standard Specification for Laminated Architectural Flat Glass 2019.

.8 ASTM C1193 - Standard Guide for Use of Joint Sealants 2016.

.9 ASTM C1349 - Standard Specification for Architectural Flat Glass Clad Polycarbonate 2017.
.10 ASTM C1376 - Standard Specification for Pyrolytic and Vacuum Deposition Coatings on Flat Glass 2021a.
.11 ASTM D882 - Standard Test Method for Tensile Properties of Thin Plastic Sheeting 2018.
.12 ASTM E90 - Standard Test Method for Laboratory Measurement of Airborne Sound Transmission Loss of Building Partitions and Elements 2009 (Reapproved 2016).
.13 ASTM E413 - Classification for Rating Sound Insulation 2022.
.14 ASTM E2190 - Standard Specification for Insulating Glass Unit Performance and Evaluation 2019.
.15 CAN/CGSB 12.1 - Safety Glazing 2017.
.16 CAN/CGSB 12.3 - Flat, Clear Float Glass 1991 (R2017).
.17 CAN/CGSB 12.4 - Heat Absorbing Glass 1991 (R2017).
.18 CAN/CGSB 12.20 - Structural Design of Glass for Buildings 1989.
.19 CAN/CGSB 19.13 - Sealing Compound, One Component, Elastomeric, Chemical Curing 1987.
.20 CAN/ULC S102.2 - Method of Test for Surface Burning Characteristics of Flooring, Floor Coverings, and Miscellaneous Materials and Assemblies 2018.
.21 EN 14179 - Glass in Building - Heat Soaked Thermally Toughened Soda Lime Silicate Safety Glass - Part 1 Definition and Description 2016.
.22 GANA (GM) - GANA Glazing Manual 2008.
.23 GANA (LGRM) - Laminated Glazing Reference Manual 2009.
.24 GANA (SM) - GANA Sealant Manual 2008.
.25 ITS (DIR) - Intertek Testing Services, Directory of Listed Products current edition.
.26 LBNL WINDOW - Lawrence Berkeley National Laboratory WINDOW 8.
.27 NFRC 100 - Procedure for Determining Fenestration Product U-factors 2017.
.28 NFRC 200 - Procedure for Determining Fenestration Product Solar Heat Gain Coefficient and Visible Transmittance at Normal Incidence 2014, with Errata (2017).
.29 NFRC 300 - Test Method for Determining the Solar Optical Properties of Glazing Materials and Systems 2017.
.30 OBC - Ontario Building Code (Regulation 332/12) 2012.
.31 OBC MMAH Supplementary Standard SB-10 - Energy Efficiency Requirements 2016.
.32 ULC (DIR) - Online Certifications Directory (Canada) Current Edition.
.33 CSA Bird-Friendly Building Design Standard

1.05 REGULATORY REQUIREMENTS

.1 The work of this Section shall conform to the requirements of NBC - latest edition, and all updated editions, and all other applicable codes and regulations, to the satisfaction of the authorities having jurisdiction.
  .1 Ensure compliance with OBC MMAH Supplementary Standard SB-10

1.06 SUBMITTALS

.1 See Division 01, General and Supplementary conditions of the Contract, for submittal procedures.

.2 *Product Data:*

.1 For each type of glazing, provide structural, physical and environmental characteristics, size limitations, special handling and installation requirements.

.2 For each type of glazing compounds and each accessory, provide chemical, functional, and environmental characteristics, limitations, special application requirements, and identify available colours.

.3 Warranty Documentation: Submit manufacturer warranty and ensure that forms have been completed in Owner's name and registered with manufacturer.

1.07 MOCK-UPS

.1 See Division 01 - General & Supplementary Requirements, for additional mock-up requirements.

.2 Provide mock-up of assembly including glass and air barrier and vapour retarder seal.

1.08 QUALITY ASSURANCE

.1 Perform Work in accordance with GANA (GM), GANA (SM), and GANA (LGRM) for glazing installation methods.

.2 Quality Limitations for Heat Strengthened and Tempered Glass: Perform tempering or heat strengthening in accordance with CAN/CGSB 12.1 and as follows:

.1 Fabricate glass using horizontal roller heating process only, with roller wave distortion parallel to bottom edge of glass as when installed.

.2 Maximum deviation from flatness at any peak (peak to valley deviation), 0.08 mm at center of lite and 0.20 mm within 267 mm of leading or trailing edge.

.3 Apply heat treatment prior to the application of low-e coatings to minimize appearance of roller wave distortion.

1.09 WASTE MANAGEMENT

.1 Cooperate with the waste management coordinator in the implementation of the waste management plan specified in Division 01, General and Supplementary conditions of the Contract.

.2 Handle and dispose of waste materials, including packaging materials, generated by the work of this section in accordance with the waste management plan.

1.10 WARRANTY

.1 See Division 01 - General & Supplementary Requirements, for additional warranty requirements.

.2 For the work of this Section, the warranty period prescribed in Division 01 of the General Conditions of the Contract, is extended to ten (10) years.

.3 Warrant insulating glass units against defects and malfunction under normal usage, including failure of seal of enclosed air space and deposits on inner faces of glass detrimental to vision.

.4 For mirrors, the warranty prescribed in Division 01, General and Supplementary conditions of the *Contract* is extended to ten (10) years.

.1 Manufacturer warranty to include coverage for failure of the silvering.

PART 2 PRODUCTS

2.01 PERFORMANCE REQUIREMENTS - EXTERIOR GLAZING ASSEMBLIES

.1 Provide type and thickness of exterior glazing assemblies to support assembly dead loads, and to withstand live loads caused by positive and negative wind pressure acting normal to plane of glass.

.1 Comply with CAN/CGSB 12.20 for design load resistance of glass type, thickness, dimensions, and maximum lateral deflection of supported glass.

.2 Ultimate Limit States: Positive and negative pressure acting normal to plane of glass using wind load requirements of Section 4.1.7 of the Ontario Building Code OBC for Normal Importance Category using Importance Factor (Iw) accounting for normal windload and gust velocities.

.3 Seismic Loads: Design and size glazing components to withstand seismic loads and sway displacement in accordance with the applicable provincial building code, and requirements from all authorities having jurisdiction.

.4 Limit of Center of Glass Deflection: Limit center of glass deflection to a maximum of 1/60 and not exceeding 10 mm relative to the undeflected glass plane.

.5 Provide glass edge support system sufficiently stiff to limit the lateral deflection of supported glass edges to less than 1/175 of their lengths under specified design load and as required to maintain full contact with glazing throat.

.6 Glass thicknesses listed are minimum.

.2 Vapour Retarder and Air Barrier Seals: Provide completed assemblies that maintain continuity of building enclosure vapour retarder and air barrier.

.1 In conjunction with vapour retarder and joint sealer materials described in other sections.

.1 See Sections 07 26 13 - Building Envelope Sheet Vapour Retarder ** , 07 27 13 - Non-permeable Air/Moisture/Vapour Barrier ** and 07 27 16 - Permeable Air/Moisture Barrier **

.3 Thermal and Optical Performance: Provide exterior glazing products with performance properties as indicated. Performance properties are in accordance with manufacturer's published data as determined with the following procedures and/or test methods:

.1 Center of Glass U-Value: Comply with NFRC 100 using LBNL WINDOW computer program.

.2 Center of Glass Solar Heat Gain Coefficient (SHGC): Comply with NFRC 200 using LBNL WINDOW computer program.

.3 Solar Optical Properties: Comply with NFRC 300 test method.

.4 Meet Solar Heat Gain Coefficient and VT/SHGC requirements of the OBC SB-10 as indicated in the drawings.

2.02 GLASS MATERIALS

.1 Float Glass: Provide float glass based glazing unless noted otherwise.
- .1 Annealed Type: CAN/CGSB 12.3, Clear Transparent
  - .1 Quality: Glazing with specific defect limitations as defined by Table 3 of CAN/CGSB 12.3 based on area of glass units.
- .2 Clear Safety Glass: Heat treated glass manufactured in compliance with CAN/CGSB 12.1 and as follows:
  - .1 Heat soak tested in accordance with EN 14179.
  - .2 Kind: HS - Heat Strengthened in compliance with ASTM C1048.
  - .3 Edges: Ground with no chips, cracks or flaws, with sharp corners and edges eased and polished before heat treatment.
  - .4 Labelling: Required.

.2 Laminated Glass: Annealed laminated glass manufactured in accordance with CAN/CGSB 12.1, and as follows:
- .1 Glass Classification: Type 1 - Transparent Flat Glass, Class 1 - Clear, Quality Q3 - Architectural Glass in compliance with ASTM C1048.
- .2 Laminating Type: Type II - Laminated Safety Glass.
- .3 Labelling: Required.
- .4 Edges: Ground with no chips, cracks or flaws, with sharp corners, and edges eased and polished.

2.03 INSULATING GLASS UNITS

.1 Insulating Glass Units: Vision glass, double glazed.
- .1 Applications: Exterior glazing unless otherwise indicated.
- .2 Space between lites filled with argon.
- .3 Bird Friendly Film: as required in *Drawings.*
- .4 Outboard Lite: Fully tempered float glass, 6 mm thick, minimum.
  - .1 Tint: Clear.
- .5 Inboard Lite: Fully tempered float glass, 6 mm thick, minimum.
  - .1 Tint: Clear.
  - .2 Low-E coating Solarban 90 or equivalent on #3 surface. Argon filled sealed units – Glazing to be clear and non-reflective or tinted.
- .6 Total Thickness: 25 mm.
- .7 Meet Solar Heat Gain Coefficient and VT/SHGC requirements of the OBC MMAH Supplementary Standard SB-10 as indicated in the drawings.

.2 Insulating Glass Units: Safety glazing.
- .1 Applications:
  - .1 Glazed lites in exterior doors.
  - .2 Other locations required by applicable federal, provincial, and municipal codes and regulations.
  - .3 Other locations indicated on *Drawings.*
- .2 Space between lites filled with air.
- .3 Glass Type: Same as other vision glazing except use fully tempered float glass for both outboard and inboard lites.
- .4 Tint: Clear.
- .5 Overall unit thickness to suit frame profile.

.6 Low-E coating Solarban 90 or equivalent on #3 surface. Argon filled sealed units – Glazing to be clear and non-reflective or tinted.
.7 Meet Solar Heat Gain Coefficient and VT/SHGC requirements of the OBC MMAH Supplementary Standard SB-10 as indicated in the *Drawings.*
.8 Bird Friendly Film: Provide as indicated in *Drawings.*

2.04 GLAZING UNITS

.1 Monolithic Interior Vision Glazing:
.1 Applications: Interior glazing unless otherwise indicated.
.2 Glass Type: Fully tempered float glass.
.3 Tint: Clear.
.4 Thickness: 6 mm, nominal.

.2 Type G-2 - Monolithic Safety Glazing: Non-fire-rated.
.1 Applications:
.1 Glazed lites in doors, except fire doors.
.2 Sliding glass doors.
.3 Glazed sidelights to doors, except in fire-rated walls and partitions.
.4 Other locations required by applicable federal, state, and local codes and regulations.
.5 Other locations indicated on *Drawings.*
.2 Clear tempered float glass to CAN/CGSB 12.1, Type 2, Class B; thickness as required by in-service loading conditions, minimum 6 mm.

2.05 FIRE RATED GLAZING UNITS

.1 Fire-Resistance-Rated Glazing: Type, thickness, and configuration of glazing that contains flame, smoke, and blocks radiant heat, as required to achieve indicated fire-rating period exceeding 45 minutes.
.1 See Section 08 44 35 for glazing in fire-rated framing assemblies.
.2 Applications:
.1 Glazing in fire-rated door assembly.
.2 Glazing in fire-rated window assembly.
.3 Glazing in sidelites, borrowed lites, and other glazed openings in fire-rated wall assemblies.
.4 Other locations as indicated on *Drawings.*
.3 Glass Type: Multi-laminate annealed glass with intumescent fire retardant interlayers.
.4 Glass Type : In specific locations where indicated: 5 mm thick glazing material composed of fire-resistant glass and a surface-applied fire-rated film, ULC-listed for the specific application. Standard of acceptance: Clear FireLite NT with Standard surface finish.
.5 Provide products listed by ITS (DIR) or ULC (DIR) and approved by authorities having jurisdiction.
.6 Safety Glazing Certification: CAN/CGSB 12.1 Class B.
.7 Glazing Method: As required for fire rating.
.8 Fire-Rating Period: As indicated on Drawings.
.9 Listing and Labelling Requirements: Provide fire rated glass and glazing products that have been tested and listed by a testing agency acceptable to the Authorities Having Jurisdiction for performance levels specified,

permanently labelled with certification mark indicating the following:
.1 Manufacturer's Name.
.2 Test Standard.
.3 Approved Usage.
.4 Hose Stream - Passed (if applicable).
.5 Impact Classification (if applicable).
.6 Fire Time Rating.
.7 Temperature Rise Rating (if applicable).

.10 Manufacturers:
.1 Technical Glass Products; FireLite NT: https://www.fireglass.com/#sle.

.11 Substitutions: Requests for substitutions will be considered in accordance with provisions of Division 01, General and Supplementary conditions of the *Contract*. Acceptance of alternative *Products* is subject to the approval of the *Consultant* and the *Owner*.
.1 All fire rated framing products and glass products to be sourced from a single manufacturer. *Contractor* to ensure that all portions of the assembly are compatible.

2.06 TEMPERED GLASS MIRRORS

.1 Tempered glass mirrors, electrolytically copper plated and guaranteed against silver spoilage and warranted for ten (10) years, ground edges, predrilled holes top and bottom for screw-mounting, sizes as indicated.

2.07 ACCESSORIES

.1 Setting Blocks: Silicone, with 80 to 90 Shore A durometer hardness; ASTM C864 Option II. Length of 25 mm for each square metre of glazing or minimum 100 mm by width of glazing rabbet space minus 1.5 mm by height to suit glazing method and pane weight and area.

.2 Spacer Shims: Neoprene, 70_ to _80 Shore A durometer hardness; ASTM C864 Option II. Minimum 75 mm long by one half the height of the glazing stop by thickness to suit application, self adhesive on one face.

.3 Glazing Tape, Back Bedding Mastic Type: Preformed, butyl-based, 100 percent solids compound with integral resilient spacer rod applicable to application indicated; 5 to 30 cured Shore A durometer hardness; coiled on release paper; black colour.
.1 Width: As required for application.
.2 Thickness: As required for application.

.4 Primers, sealers and cleaners: to glass manufacturer's standard.

PART 3 EXECUTION

3.01 EXAMINATION

.1 Verify that openings for glazing are correctly sized and within tolerances, including those for size, squareness, and offsets at corners.

.2 Verify that surfaces of glazing channels or recesses are clean, free of obstructions that may impede moisture movement, weeps are clear, and support framing is ready to receive glazing system.

.3 Verify that sealing between joints of glass framing members has been completed effectively.

.4 Proceed with glazing system installation only after unsatisfactory conditions have been corrected.

.5 Examine areas and conditions under which work is to be performed and notify the *Contractor* in writing of conditions detrimental to the proper and timely completion of the work.

.6 Do not proceed with the work until unsatisfactory conditions have been corrected to the satisfaction of the installer.

.7 Take field measurements to verify or supplement dimensions. Make necessary allowances for thermal movement as specified in Section 08 44 13 - Glazed Aluminum Curtain Walls.

.8 Commencement of the installation will be construed as acceptance of the site conditions and, thereafter, the applicable *Contractor* shall be fully responsible for satisfactory work as specified herein.

3.02 PREPARATION

.1 Clean contact surfaces with appropriate solvent and wipe dry within maximum of 24 hours before glazing. Remove coatings that are not tightly bonded to substrates.

.2 Seal porous glazing channels or recesses with substrate compatible primer or sealer.

.3 Prime surfaces scheduled to receive sealant where required for proper sealant adhesion.

3.03 INSTALLATION, GENERAL

.1 Install glazing in compliance with written instructions of glass, gaskets, and other glazing material manufacturers, unless more stringent requirements are indicated, including those in glazing referenced standards.

.2 Install glazing sealants in accordance with ASTM C1193, GANA (SM), and manufacturer's instructions.

.3 Do not exceed edge pressures around perimeter of glass lites as stipulated by glass manufacturer.

3.04 WORKMANSHIP

.1 Remove protective coatings and clean contact surfaces with solvent and wipe dry.

.2 Apply primer-sealer to contact surfaces.

.3 Place setting blocks as per manufacturer's instructions.

.4 Install glass, rest on setting blocks, ensure full contact and adhesion at perimeter.

.5 Install removable stops, without displacing tape or sealant.

.6 Provide edge clearance of 3 mm minimum.

.7 Insert spacer shims to centre glass in space. Place shims at 600 mm o.c. and keep 6 mm below sight line.

.8 Do not cut or abrade tempered, heat treated, or coated glass.

3.05 GLAZING OF ALUMINUM DOORS, SIDELIGHTS, WINDOWS AND CURTAIN WALL

.1 Installation by the installer to system manufacturer's recommendations. Refer to Sections 08 11 16 - Aluminum Doors and Frames, 08 44 13 - Glazed Aluminum Curtain Walls.

.2 Manufacturer is to meet an effective door U-Value (edge-to-edge including framing) of U-0.69 and SHGC-0.4 in compliance with OBC SB10.

3.06 GLAZING OF HOLLOW STEEL DOORS AND FRAMES

.1 Hollow steel doors and frames: Dry method - tape/tape as follows:

.1 Cut glazing tape to length and install against permanent stop, project 1.5 mm above sightline.

.2 Place glazing tape on free perimeter of glass in same manner described above.

.3 Screw-fasten glazing stops, in accordance with the manufacturer's instructions.

3.07 CLEANING

.1 See Division 01, General and Supplementary conditions of the *Contract* for additional cleaning requirements.

.2 Remove excess glazing materials from finish surfaces immediately after application using solvents or cleaners recommended by manufacturers.

.3 Remove non-permanent labels immediately after glazing installation is complete.

.4 Clean glass and adjacent surfaces after sealants are fully cured.

.5 Clean glass on both exposed surfaces not more than 4 days prior to Date of Ready-For-Takeover in accordance with glass manufacturer's written recommendations.

.6 Upon completion of the installation, remove from the premises all surplus material, dirt and debris caused by the *Work* of this section and leave the installation clean.

.7 Make good damage to other work caused by the *Work* of this section.

3.08 PROTECTION

.1 After installation, mark pane with an 'X' by using removable plastic tape or paste; do not mark heat absorbing or reflective glass units.

.2 Remove and replace glass that is damaged during construction period prior to Date of *Ready-For-Takeover.*

END OF SECTION 08 80 00

This page intentionally left blank

SECTION 09 00 00
MASTER FINISH SCHEDULE (REFER TO DRAWINGS) *

END OF SECTION 09 00 00

This page intentionally left blank

SECTION 09 21 16
GYPSUM BOARD ASSEMBLIES

PART 1 GENERAL

1.01 RELATED DOCUMENTS

.1 Drawings and general provisions of the Contract, including General and Supplementary Conditions and Division 1 Specification Sections, apply to this Section.

1.02 SUMMARY OF WORK

.1 Work Included:

.1 The work of this Section includes the provision of all labour, materials, equipment and services required to install gypsum board wall and ceiling finishes, as indicated on the drawings, as specified herein and as required for a complete project.

.2 Section Includes:

.1 Performance criteria for gypsum board assemblies.
.2 Metal stud wall framing.
.3 Metal channel ceiling framing.
.4 Acoustic insulation.
.5 Gypsum sheathing.
.6 Cementitious backing board.
.7 Gypsum board.
.8 Joint treatment and accessories.
.9 Water-resistive barrier over exterior wall sheathing.

1.03 RELATED REQUIREMENTS

.1 Section 07 21 00 - Board and Batt Insulation
.2 Section 07 26 13 - Building Envelope Sheet Vapour Retarder **
.3 Section 07 26 16 - Under-Slab Sheet Vapour Retarder **
.4 Section 07 27 13 - Non-permeable Air/Moisture/Vapour Barrier **
.5 Section 07 27 16 - Permeable Air/Moisture Barrier **
.6 Section 07 84 00 - Firestopping: Top-of-wall assemblies at fire rated walls.
.7 Section 07 92 00 - Joint Sealants: Sealing acoustical gaps in construction other than gypsum board or plaster work.
.8 Section 09 22 16 - Non-Structural Metal Stud Framing.
.9 Section 09 30 13 - Ceramic Tiling
.10 Section 09 91 00 - Painting *
.11 Division 26 - Electrical.

1.04 REFERENCE STANDARDS

.1 ANSI A108.11 - American National Standard Specifications for Interior Installation of Cementitious Backer Units 2010 (Reaffirmed 2016).
.2 ANSI A118.9 - American National Standard Specifications for Test Methods and Specifications for Cementitious Backer Units 1999 (Reaffirmed 2016).
.3 ASTM A653/A653M - Standard Specification for Steel Sheet, Zinc-Coated (Galvanized) or Zinc-Iron Alloy-Coated (Galvannealed) by the Hot-Dip Process 2020.

.4 ASTM C475/C475M - Standard Specification for Joint Compound and Joint Tape for Finishing Gypsum Board 2017 (Reapproved 2022).

.5 ASTM C635/C635M - Standard Specification for the Manufacture, Performance, and Testing of Metal Suspension Systems for Acoustical Tile and Lay-in Panel Ceilings 2022.

.6 ASTM C645 - Standard Specification for Nonstructural Steel Framing Members 2018.

.7 ASTM C754 - Standard Specification for Installation of Steel Framing Members to Receive Screw-Attached Gypsum Panel Products 2020.

.8 ASTM C834 - Standard Specification for Latex Sealants 2017.

.9 ASTM C840 - Standard Specification for Application and Finishing of Gypsum Board 2020.

.10 ASTM C954 - Standard Specification for Steel Drill Screws for the Application of Gypsum Panel Products or Metal Plaster Bases to Steel Studs From 0.033 in. (0.84 mm) to 0.112 in. (2.84 mm) in Thickness 2022.

.11 ASTM C1002 - Standard Specification for Steel Self-Piercing Tapping Screws for Application of Gypsum Panel Products or Metal Plaster Bases to Wood Studs or Steel Studs 2022.

.12 ASTM C1047 - Standard Specification for Accessories for Gypsum Wallboard and Gypsum Veneer Base 2019.

.13 ASTM C1177/C1177M - Standard Specification for Glass Mat Gypsum Substrate for Use as Sheathing 2017.

.14 ASTM C1178/C1178M - Standard Specification for Coated Glass Mat Water-Resistant Gypsum Backing Panel 2018.

.15 ASTM C1278/C1278M - Standard Specification for Fiber-Reinforced Gypsum Panel 2017.

.16 ASTM C1280 - Standard Specification for Application of Exterior Gypsum Panel Products for Use as Sheathing 2018.

.17 ASTM C1396/C1396M - Standard Specification for Gypsum Board 2017.

.18 ASTM C1658/C1658M - Standard Specification for Glass Mat Gypsum Panels 2019, with Editorial Revision (2020).

.19 ASTM D3273 - Standard Test Method for Resistance to Growth of Mold on the Surface of Interior Coatings in an Environmental Chamber 2021.

.20 ASTM E90 - Standard Test Method for Laboratory Measurement of Airborne Sound Transmission Loss of Building Partitions and Elements 2009 (Reapproved 2016).

.21 ASTM E413 - Classification for Rating Sound Insulation 2022.

.22 ASTM E1264 - Standard Classification for Acoustical Ceiling Products 2022.

.23 ASTM G21 - Standard Practice for Determining Resistance of Synthetic Polymeric Materials to Fungi 2015, with Editorial Revision (2021).

.24 CAN/ULC S102 - Method of Testing for Surface Burning Characteristics of Building Materials and Assemblies 2018.

.25 CAN/ULC S114 - Test for Determination of Non Combustibility in Building Materials 2018.

.26 CAN/ULC S702.1 - Standard for Mineral Fibre Thermal Insulation for Buildings, Part 1: Material Specification 2021.

.27 CSSBI 57-02 - Lightweight Steel Framing Architectural Design Guide 2002.

.28 GA-216 - Application and Finishing of Gypsum Panel Products 2016.

.29 GA-226 - Application of Gypsum Board to Form Curved Surfaces; Gypsum Association 2016.

.30 ULC (FRD) - Fire Resistance Directory Current Edition.

1.05 REGULATORY REQUIREMENTS

.1 Fire-resistance rated assemblies incorporating gypsum board: ULC fire resistive floor/ceiling and roof/ceiling design requirements.

1.06 DESIGN CRITERIA

.1 Design the suspended ceiling and bulkhead framing to be attached to and supported by the joists above. Attachment to the steel deck will not be permitted.

.2 The suspension system to be capable of safely supporting the weight of all items which are designed to be supported by it, including, but not limited to:

.1 Light fixtures.

.2 Diffusers.

.3 Other items supported by the ceiling system.

.3 Be advised that light fixtures will not be provided with separate support.

.4 Design the suspension system to withstand normal and seismic loads.

.5 Maximum deflection: 1/360 of span to ASTM C635/C635M deflection test.

1.07 SUBMITTALS

.1 See Division 01, General and Supplementary conditions of the Contract for submittal procedures.

.2 *Shop Drawings:*

.1 Provide *Shop Drawings* for the metal framing for suspended ceilings and bulkheads.

.2 Clearly indicate layout and dimensions, member sizes, profiles and thicknesses, connection details, fastening methods, and other pertinent information.

.3 The ceiling and bulkhead framing, including all related connections and fastenings, shall be designed by a structural engineer permanently licensed to practise in the province of the location of the project. Each *Shop Drawing* submitted shall bear the stamp and signature of the aforesaid structural engineer.

.4 Post-installation certification: After installation, provide written certification, signed by the structural engineer responsible for the *Shop Drawings*, that all applicable items have been installed in accordance with the *Shop Drawings*.

.5 Indicate special details associated with fireproofing and acoustic seals.

.3 Product Data: Provide data on metal framing, gypsum board, glass mat faced gypsum board, accessories, and joint finishing system.

.4 Product Data: Provide manufacturer's data on partition head to structure connectors, showing compliance with requirements.

1.08 DELIVERY, STORAGE, AND HANDLING

.1 Deliver materials in original packages, containers, or bundles bearing brand name and identification of manufacturer or supplier.

.2 Store materials inside, under cover and in accordance with the manufacturers' instructions.

.3 Keep materials dry and protected against damage from weather, direct sunlight, surface contamination, corrosion, construction traffic, and other causes.

.4 Neatly stack gypsum panels flat to prevent sagging.

1.09 PROJECT CONDITIONS

.1 Environmental Conditions, General: Establish and maintain environmental conditions for applying and finishing gypsum board to comply with ASTM C840 requirements or gypsum board manufacturer's recommendations, whichever are more stringent.

.2 Room Temperatures: For nonadhesive attachment of gypsum board to framing, maintain not less than 4oC. For adhesive attachment and finishing of gypsum board, maintain not less than 10oC for 48 hours before application and continuously after until dry. Do not exceed 35oC when using temporary heat sources.

.3 Ventilation: Ventilate building spaces as required to dry joint treatment materials. Avoid drafts during hot, dry weather to prevent finishing materials from drying too rapidly.

1.10 WASTE MANAGEMENT AND DISPOSAL

.1 Cooperate with the Waste Management Coordinator in the implementation of the Waste Management Plan specified in Division 01, General and Supplementary conditions of the Contract. Handle and dispose of waste materials generated by the work of this Section in accordance with the Waste Management Plan.

PART 2 PRODUCTS

2.01 GYPSUM BOARD ASSEMBLIES

.1 Provide completed assemblies complying with ASTM C840 and GA-216.

.2 Shaft Walls at HVAC Shafts: where applicable provide completed assemblies with the following characteristics:

.1 Air Pressure Within Shaft: Sustained loads of 0.24 kPa with maximum mid-span deflection of L/240.

.2 Acoustic Attenuation: STC of 45-49 calculated in accordance with ASTM E413, based on tests conducted in accordance with ASTM E90.

.3 Fire Rated Assemblies: Provide completed assemblies refer to ULC listings as indicated on drawings

.1 ULC Assembly Numbers: Provide construction equivalent to that listed for the particular assembly in the current ULC (FRD).

2.02 METAL FRAMING MATERIALS

.1 Manufacturers - Metal Framing, Connectors, and Accessories:
  .1 Bailey Metal Products; [_____]: www.bmp-group.com/#sle.
  .2 Substitutions see Division 01, General and Supplementary conditions of the Contract. Acceptance of alternative products is subject to the approval of the Consultant.

.2 Non-Loadbearing Framing System Components: ASTM C645; galvanized sheet steel, of size and properties necessary to comply with ASTM C754 for the spacing indicated, with maximum deflection of wall framing of L/120 at 240 Pa.
  .1 Studs: "C" shaped with flat or formed webs with knurled faces.
  .2 Runners: U shaped, sized to match studs.
  .3 Ceiling Channels: C-shaped.
  .4 Furring: Hat-shaped sections, minimum depth of 22 mm.
  .5 Resilient Furring Channels: 12 mm depth, for attachment to substrate through both legs; both legs expanded metal mesh.

.3 Exterior Non-Loadbearing Studs and Furring for Application of Gypsum Board: As specified in Section 09 22 16 - Non-Structural Metal Stud Framing

.4 Shaft Wall Studs and Accessories: ASTM C645; galvanized sheet steel, of size and properties necessary to comply with ASTM C754 and specified performance requirements.
  .1 Products:
    .1 Same manufacturer as other framing materials.

.5 Area Separation Wall Studs and Accessories: ASTM C645; galvanized sheet steel, of size and properties necessary to comply with specified performance requirements.
  .1 Products:
    .1 Same manufacturer as other framing materials.

.6 Ceiling Hangers: Type and size as specified in ASTM C754 for spacing required.

.7 Partition Head to Structure Connections: Provide mechanical anchorage devices that accommodate deflection using slotted holes, screws and anti-friction bushings, preventing rotation of studs while maintaining structural performance of partition.
  .1 Structural Performance: Maintain lateral load resistance and vertical movement capacity required by applicable code, when evaluated in accordance with CSSBI 57-02.
  .2 Material: ASTM A653/A653M steel sheet, SS Grade 50/340, with G60/Z180 hot dipped galvanized coating.
  .3 Provide components UL-listed for use in UL-listed fire-rated head of partition joint systems indicated on Drawings.
  .4 Deflection and Firestop Track:
    .1 Provide mechanical anchorage devices as described above that accommodate deflection while maintaining the fire-rating of the wall assembly.

.8 Preformed Top Track Firestop Seal:
  .1 Provide components UL-listed for use in UL-listed fire-rated head of partition joint systems indicated on Drawings.

2.03 BOARD MATERIALS

.1 Manufacturers - Gypsum-Based Board:
  .1 CertainTeed Corporation: www.certainteed.com/#sle.
  .2 CGC Interiors, a USG Company: www.usg.com/content/usgcom/en_CA_east.html/#sle.
  .3 Georgia-Pacific Canada LP
.2 General:
  .1 Provide gypsum board of types indicated in maximum lengths available that will minimize end-to-end butt joints in each area indicated to receive gypsum board application, thicknesses as indicated. Requirements as follows except where otherwise indicated:
    .1 Width: 1219 mm.
    .2 Thicknesses: as indicated.
    .3 Edges:
      .1 For surfaces to be finished with joint compound: Tapered.
      .2 For unfinished surfaces: Square.
      .3 Ends: Square.
  .2 Gypsum Board to ASTM C1396/C1396M :
    .1 Standard gypsum board unless otherwise indicated.
    .2 Fire resistant gypsum board: Type X where required for fire-resistance-rated assemblies.
    .3 Moisture resistant (MR) board: Provide MR board in selected rooms where indicated.
.3 Gypsum Board: Gypsum panels as defined in ASTM C1396/C1396M; sizes to minimize joints in place; ends square cut.
  .1 Application: Use for vertical surfaces and ceilings, unless otherwise indicated.
  .2 Mold Resistance: Score of 10, when tested in accordance with ASTM D3273.
    .1 Mold resistant board is required in selected rooms where indicated.
  .3 At Assemblies Indicated with Fire-Rating: Use type required by indicated tested assembly; if no tested assembly is indicated, use Type X board, ULC listed.
  .4 Thickness:
    .1 Vertical Surfaces: As indicated on drawings.
  .5 Glass Mat Faced Products:
    .1 Standard of acceptance: Dens-Shield Tile Backer by Georgia-Pacific.
.4 Backing Board For Wet Areas: One of the following products:
  .1 Application: Surfaces behind tile or FRP board in wet areas including tub and shower surrounds and shower ceilings.
  .2 Glass-Mat, Water-Resistant Gypsum Backing Board to ASTM C1178/C1178M:
  .3 Glass Mat Faced Board: Coated glass mat water-resistant gypsum backing panel as defined in ASTM C1178/C1178M.
    .1 Products: Tile backer board.
.5 Ceiling Board: Special sag resistant gypsum ceiling board as defined in ASTM C1396/C1396M; sizes to minimize joints in place; ends square cut.

.1 Application: Ceilings, unless otherwise indicated.
.2 Thickness: As indicated on drawings.
.3 Edges: Tapered.

.6 Exterior Sheathing Board: Sizes to minimize joints in place; ends square cut.
.1 Application: Exterior sheathing, unless otherwise indicated.
.2 Mold Resistance: Score of 10, when tested in accordance with ASTM D3273.
.3 Glass Mat Faced Sheathing: Glass mat faced gypsum substrate as defined in ASTM C1177/C1177M.
.4 At Assemblies Indicated with Fire-Rating: Use type required by indicated tested assembly; if no tested assembly is indicated, use Type X board, ULC or WH listed.
.5 Core Type: Regular and Type X, as indicated.
.6 Edges: Square.
.7 Glass Mat Faced Products:
.1 Dens glass gold by Georgia Pacific.

2.04 ACCESSORIES

.1 Acoustic Insulation for Non Rated Assemblies: Meeting the requirements of CAN/ULC S702.1, ASTM E90; glass fibre acoustic sound batts, Type 1 for all properties other than thermal, width to friction fit steel studs; un faced, unfaced. Thickness: As indicated on drawings to fill a minimum of 90% of the cavity width, nominal density 12.2 kg/m³ minimum; STC ratings as indicated on Drawings:
.1 Products:

.2 Acoustic Insulation for Fire and Smoke Rated Assemblies: Meeting the requirements of CAN/ULC S702.1, mineral fibre acoustic sound batts, Type 1 for all properties except thermal performance, width to friction fit steel studs; un faced. Thickness to suit application to fill a minimum of 90% of the cavity width, nominal density 40 kg/m³ minimum; STC ratings as indicated on Drawings; having maximum flame spread and smoke developed of 0/0 in accordance with CAN/ULC S102 and being non-combustible in accordance with CAN/ULC S114:
.1 Products:

.3 Acoustic Sealants for Fire Rated Assemblies: Use only fire rated materials as final seal in fire rated assemblies; apply acoustic sealants prior application of fire seals; provide materials specified in Section 078400 - Firestopping.

.4 Acoustic Sealants for Smoke Rated Assemblies: Lightweight low trigger resistance, non-sag, smooth surface finishing smoke and acoustic sealant in accordance with ASTM C834:

.5 Water-Resistive Barrier: as specified in 07 26 13 - Building Envelope Sheet Vapour Retarder ** , 07 27 13 - Non-permeable Air/Moisture/Vapour Barrier ** and 07 27 16 - Permeable Air/Moisture Barrier **

.6 Finishing Accessories: ASTM C1047, rolled zinc, unless noted otherwise.
.1 Types: As detailed or required for finished appearance.
.2 Special Shapes: In addition to conventional corner bead and control joints, provide L-bead and LC-bead at exposed panel edges.
.1 LC-bead with both face and back flanges; face flange formed to receive joint compound. Use LC-beads for edge trim, unless otherwise indicated.

.1 L-bead with face flange only; face flange formed to receive joint compound. Use L-bead where indicated.
.2 One-piece control joint formed with V-shaped slot and removable strip covering slot opening.

.2 Note that standard "U" bead (J-trim) is not acceptable. Use "L" bead that is concealed when taped and filled.

.7 Joint Materials: ASTM C475/C475M and as recommended by gypsum board manufacturer for project conditions.
.1 Tape: 50 mm wide, coated glass fiber tape for joints and corners as recommended by the gypsum board manufacturer.
.2 Tape: 50 mm wide, creased paper tape for joints and corners as recommended by the gypsum board manufacturer.

.8 Joint Compound for Gypsum Board: Factory-mixed, all-purpose compound formulated for both taping and topping compound.
.1 Chemical hardening type compound.

.9 High Build Drywall Surfacer: Vinyl acrylic latex-based coating for spray application, designed to take the place of skim coating and separate paint primer in achieving Level 5 finish.

.10 Screws for Fastening of Gypsum Panel Products to Cold-Formed Steel Studs Less than 0.84 mm in Thickness and Wood Members: ASTM C1002; self-piercing tapping screws, corrosion resistant.

.11 Screws for Fastening of Gypsum Panel Products to Steel Members from 0.84 to 2.84 mm in Thickness: ASTM C954; steel drill screws, corrosion resistant.

.12 Anchorage to Substrate: Tie wire, nails, screws, and other metal supports, of type and size to suit application; to rigidly secure materials in place.

2.05 MISCELLANEOUS MATERIALS

.1 General: Provide auxiliary materials for gypsum board construction that comply with referenced standards and recommendations of gypsum board manufacturer.

.2 Laminating Adhesive: Special adhesive or joint compound recommended for laminating gypsum panels.

.3 Spot Grout: ASTM C475/C475M, setting-type joint compound recommended for spot-grouting hollow metal door frames.

.4 Fastening Adhesive for Metal: Special adhesive recommended for laminating gypsum panels to steel framing.

.5 Fasteners: Steel drill screws complying with ASTM C954 for fastening gypsum board to steel members from 0.84 mm to 2.84 mm (21 ga to 12 ga) thick.

.6 Acoustic sealant: Refer to Section 07 92 00 - Joint Sealants.

PART 3 EXECUTION

3.01 EXAMINATION

.1 Verify that project conditions are appropriate for work of this section to commence.

.2 Examine areas and conditions under which work is to be performed and notify the *Contractor* in writing of conditions detrimental to the proper and timely completion of the work.

.3 Do not proceed with the work until unsatisfactory conditions have been corrected to the satisfaction of the installer.

.4 Take field measurements to verify or supplement dimensions.

.5 Commencement of the installation will be construed as acceptance of the site conditions and, thereafter, the Contractor shall be fully responsible for satisfactory work as specified herein.

3.02 COORDINATION

.1 Examine the mechanical and electrical drawings and coordinate with appropriate other trades to establish openings, additional support, furring out and other special provisions required for mechanical and electrical fixtures and fittings and access hatches built into the work of this Section.

.2 Examine the architectural drawings and coordinate with appropriate other trades to establish openings, additional support and other special provisions required for items built into or partially supported by the work of this Section.

3.03 SHAFT WALL INSTALLATION

.1 Shaft Wall Framing: Install in accordance with manufacturer's installation instructions.

.1 Install studs at spacing required to meet performance requirements.

.2 Shaft Wall Liner: Cut panels to accurate dimension and install sequentially between special friction studs.

3.04 FRAMING INSTALLATION

.1 Metal Framing: Install in accordance with ASTM C754 and manufacturer's instructions.

.2 Suspended Ceilings and Soffits: Space framing and furring members as indicated.

.1 Erect hangers and runner channels for suspended gypsum board ceilings in accordance with ASTM C754 except where specified otherwise.

.2 Attach ceiling and soffit framing to structural steel members. Do not attach to steel deck.

.3 Support light fixtures by providing additional ceiling suspension hangers within 150 mm of each corner and at maximum 600 mm o.c. around perimeter of fixture.

.4 Install work level to tolerance of 1:1200.

.5 Frame with furring channels, perimeter of openings for access panels, light fixtures, diffusers, grilles and similar items which penetrate the ceiling surface.

.6 Install 19 x 64 mm furring channels parallel to, and at exact locations of steel stud partition header tracks.

.7 Frame openings to receive ceiling-mounted access doors. Coordinate with Divisions 15 and 16.

.8 Laterally brace entire suspension system.

.3 Ceiling Bulkheads

.1 Frame for gypsum board faced vertical bulkheads within and at termination of ceilings.

.2 Frame for complex bulkheads in accordance with the drawings.
.3 Frame above suspended ceilings for gypsum board fire and sound stops and to form plenum areas as indicated.

.4 Studs: Space studs at 406 mm on center.
.1 Extend partition framing as indicated on drawings.
.2 Partitions Terminating at Ceiling: Attach ceiling runner securely to to ceiling framing in accordance with details.
.3 Partitions Terminating at Structure: Attach top runner to structure, maintain clearance between top of studs and structure, and connect studs to track using specified mechanical devices in accordance with manufacturer's instructions; verify free movement of top of stud connections; do not leave studs unattached to track.

.5 Standard Wall Furring: Install at concrete walls scheduled to receive gypsum board, not more than 25mm from floor and ceiling lines and abutting walls. Secure in place on alternate channel flanges at maximum 600 mm on center.

.6 Furring for Fire Ratings: Install as required for fire resistance ratings indicated and to GA-600 requirements.

.7 Blocking: Install wood blocking for support of:
.1 All items as indicated on drawings.

3.05 ACOUSTIC ACCESSORIES INSTALLATION

.1 Acoustic Insulation: Place tightly within spaces, around cut openings, behind and around electrical and mechanical items within partitions, and tight to items passing through partitions.

.2 Acoustic Sealant: Install in accordance with manufacturer's instructions.

3.06 BOARD INSTALLATION

.1 Comply with ASTM C840, GA-216, and manufacturer's instructions.

.2 Single-Layer Non-Rated:
.1 Apply gypsum board vertically or horizontally, providing sheet lengths that will minimize end joints.

.3 Double-Layer Non-Rated:
.1 Install gypsum board for base layer and exposed gypsum board for face layer.
.2 Apply base layer to ceilings prior to base layer application on walls; apply face layers in same sequence. Offset joints between layers at least 250 mm.
.3 Apply base layers at right angles to supports unless otherwise indicated.
.4 Apply base layer on walls and face layers vertically with joints of base layer over supports and face layer joints offset at least 250 mm with base layer joints.

.4 Fire-Rated Construction: Install gypsum board in strict compliance with requirements of assembly listing.

.5 Exposed Gypsum Board in Interior Wet Areas: Seal joints, cut edges, and holes with water-resistant sealant.

.6 Exterior Sheathing: Comply with ASTM C1280. Install sheathing vertically, with edges butted tight and ends occurring over firm bearing.

.1 Seal joints, cut edges, and holes with water-resistant sealant.
.2 Sheathing: Immediately after installation, protect from weather by application of water-resistive barrier.

.7 Cementitious Backing Board: Install over steel framing members and plywood substrate where indicated, in accordance with ANSI A108.11 and manufacturer's instructions.

.8 Installation on Metal Framing: Use screws for attachment of gypsum board except face layer of non-rated double-layer assemblies, which may be installed by means of adhesive lamination.

.9 Curved Surfaces: Apply gypsum board to curved substrates in accordance with GA-226.

.10 Apply a 12 mm diameter bead of acoustic sealant continuously around the periphery of each face of partitioning to seal the gypsum board/structure junction where partitions abut fixed building components. Seal the full perimeter of cut outs around electrical boxes, ducts and any other items which penetrate one or both faces of the partition, in partitions where the perimeter is sealed with acoustic sealant.

.11 Install ceiling boards in direction that will minimize number of end-butt joints. Stagger end joints at least 250 mm.

.12 Install gypsum board on walls vertically to avoid end-butt joints. At stairwells and similar high walls, install boards horizontally with end joints staggered over studs, except where local codes or fire-rated assemblies require vertical application.

.13 Install gypsum board with face side out.

.14 Do not install damaged or damp boards.

.15 Locate edge or end joints over supports. Stagger vertical joints over different studs on opposite sides of wall.

.16 INSTALL GYPSUM BOARD 12.7MM ABOVE FLOOR IN ALL LOCATIONS

3.07 INSTALLATION OF TRIM AND ACCESSORIES

.1 Control Joints: Place control joints consistent with lines of building spaces and as indicated.

.2 Corner Beads: Install at external corners, using longest practical lengths.

.3 Edge Trim: Install at locations where gypsum board abuts dissimilar materials.

.4 Erect accessories straight, plumb or level, rigid and at proper plane. Use full length pieces where practical. Make joints tight, accurately aligned and rigidly secured. Mitre and fit corners accurately, free from rough edges. Secure at 150 mm o.c.

.1 Install casing beads around perimeter of suspended ceilings.
.2 Install casing beads where gypsum board butts against surfaces having no trim concealing junction and where indicated. Seal joints with sealant.
.3 Install insulating strips continuously at edges of gypsum board and casing beads abutting metal window and exterior door frames, to provide thermal break.

3.08 JOINT TREATMENT

.1 Confirm locations of control joints with Consultant before installation. DRYWALL Contractor IS DEEMED TO BE AN EXPERT WITH RESPECT TO THE

REQUIREMENT AND LOCATION OF CONTROL JOINTS AND WILL BE RESPONSIBLE TO RETURN AND ADD CONTROL JOINTS IF POST INSTALLATION CRACKING OCCURS.

.2 Construct control joints of preformed units except where otherwise shown. At junction of partitions with bulkheads, where indicated on the drawings, use two casing beads as indicated on the drawings.

.3 Set gypsum board facing in the preformed units or casing beads and support independently on both sides of joint.

.4 Provide continuous dust barrier behind and across control joints.

.5 Where not otherwise indicated, locate control joints at changes in substrate construction, at approximate 10 m spacing on long wall or partition runs, at approximate 15 m spacing on ceilings. Verify locations with the Consultant before installation.

.6 Install control joints straight and true.

.7 Glass Mat Faced Gypsum Board and Exterior Glass Mat Faced Sheathing: Use fiberglass joint tape, bedded and finished with chemical hardening type joint compound.

.8 Gypsum Board: Use Fibreglass joint tape, bedded with ready-mixed vinyl-based joint compound and finished with ready-mixed vinyl-based joint compound.

.9 Finish gypsum board in accordance with levels defined in ASTM C840, as follows:

.1 Level 5: Walls and ceilings to receive semi-gloss or gloss paint finish and other areas specifically indicated.

.2 Level 4: Walls and ceilings to receive paint finish or wall coverings, unless otherwise indicated.

.3 Level 3: Walls to receive textured wall finish.

.4 Level 2: In utility areas, behind cabinetry, and on backing board to receive tile finish.

.5 Level 1: Fire rated wall areas above finished ceilings, whether or not accessible in the completed construction.

.6 Level 0: Temporary partitions.

.7 Level 0: Surfaces indicated to be finished in later stage of project.

.10 Tape, fill, and sand exposed joints, edges, and corners to produce smooth surface ready to receive finishes.

.1 Feather coats of joint compound so that camber is maximum 0.8 mm.

.11 Where Level 5 finish is indicated, spray apply high build drywall surfacer over entire surface after joints have been properly treated; achieve a flat and tool mark-free finish.

.12 Access Doors

.1 Install access doors to electrical and mechanical fixtures and electrical panelboards specified in respective Sections.

.2 Rigidly secure frames to furring or framing systems.

.13 Acoustical Seal at Partition Perimeters

.1 Minimize gaps between gypsum board and adjacent constructions and partition perimeters. Gaps greater than 13 mm wide are unacceptable.

.2 Gaps between 6 mm and 13 mm to be packed with back-up rod and caulked with acoustical sealant specified in Section 07 92 00 - Joint

Sealants. Gaps below 6 mm do not require back-up rod.

.3 Apply acoustical sealant to the first layer of gypsum board and arrange for review by the Consultant before application of the second layer of gypsum board.

.4 Cut drywall neatly and tight around all penetrations at STC rated walls. Provide fitted drywall flanges around all mechanical penetrations. Complete drywall flange by caulking full perimeter to penetrations and adjacent gypsum board. Caulking to be reviewed by the Consultant before concealing.

.5 Stagger electrical outlets or mechanical installations on opposing sides of STC rated walls. Ensure sound attentuation insulation runs behind all penetrations. All electrical outlets to have vapour hoods and cover plate gaskets.

.14 Taping and Filling

.1 Finish face panel joints and internal angles with joint system consisting of joint compound, joint tape and taping compound installed according to manufacturer's directions and feathered out onto panel faces.

.2 Finish corner beads, control joints, trim and joints in fibre reinforced panels as required with two coats of joint compound and one coat of taping compound, feathered out onto panel faces.

.3 Fill screw head depressions with joint and taping compounds to bring flush with adjacent surface of gypsum board so as to be invisible after surface finish is completed.

.4 Sand lightly to remove burred edges and other imperfections. Avoid sanding adjacent surface of board.

.5 Completed installation to be smooth, level or plumb, free from blemishes.

.15 Glass Mat Gypsum Tile Backer Installation

.1 Install tile backer board in accordance with the manufacturer's recommendations and to the satisfaction of the ceramic tile installer.

.2 Place temporary 6 mm spacer strips around the lips of plumbing fixtures.

.3 Precut boards to required sizes and make necessary cutouts. Fit ends and edges closely but not tightly.

.4 Start by installing the boards adjacent to the spacer strips.

.5 Stagger end joints in successive courses.

.6 Fasten boards to steel studs and/or steel furring spaced at maximum 400 mm o.c. and to bottom plates with 32 mm steel screws at 200 mm o.c. with perimeter fasteners between 10 mm and 16 mm from the edges of the boards.

.7 Prefill panel joints, and joints where panels abut other surfaces such as gypsum board, with tile setting mortar or adhesive and then immediately embed joint tape and level the joints. Coordinate with the ceramic tile installer to ensure compatibility of joint treatment material.

.8 On portions of wall not to be tiled, apply tape over joints and angles and embed tape in joint compound. Trowel joint compound over the entire surface to produce a smooth surface.

.16 Glass Mat Gypsum Sheathing Installation

.1 Install glass mat gypsum sheathing where indicated, in accordance with the manufacturer's recommendations.

.2 Install yellow side facing out.
.3 Lay out boards so that joints are centered on framing or furring members. Stagger end joints.
.4 Cut boards to fit irregular shapes and to fit snugly around door and window openings. On curved surfaces, score boards if required to maintain curves.
.5 Ensure that all edges are supported continuously. Provide additional furring if necessary.
.6 Butt boards together in an easy fit.
.7 Fasten in accordance with the manufacturer's recommendations for the specific application. Maximum fastener spacing: 200 mm o.c.
.8 Locate fasteners no closer than 10 mm from the edges of the boards and drive firmly against and flush with the surface of the sheathing. Do not countersink.

END OF SECTION 09 21 16

SECTION 09 22 16
NON-STRUCTURAL METAL STUD FRAMING

PART 1 GENERAL

1.01 RELATED DOCUMENTS

.1 Drawings and general provisions of the Contract, including General and Supplementary Conditions and Division 1 Specification Sections, apply to this Section.

1.02 SUMMARY OF WORK

.1 Work Included: The work of this Section includes the provision of all labour, materials, equipment and services required to fabricate and install non-bearing steel stud systems for interior partitions, as indicated on the drawings, as specified herein and as required for a complete project.

.2 Section Includes:

.1 Metal partition, ceiling, and soffit framing.

.2 Framing accessories.

1.03 RELATED REQUIREMENTS

.1 For Structural Metal Stud Framing - Refer to Structural *Drawings* and *Specifications.*

.2 Section 06 10 00 - Rough Carpentry: Wood blocking within stud framing.

.3 Section 07 21 00 - Board and Batt Insulation: Acoustic insulation.

.4 Section 07 81 00 - Applied Fireproofing

.5 Section 07 84 00 - Firestopping: Sealing top-of-wall assemblies at fire rated walls.

.6 Section 07 92 00 - Joint Sealants: Sealing acoustical gaps in construction other than gypsum board or plaster work.

.7 Section 09 21 16 - Gypsum Board Assemblies: Metal studs for gypsum board partition framing.

.8 Section 09 21 16 - Gypsum Board Assemblies: Execution requirements for anchors for attaching work of this section.

1.04 REFERENCE STANDARDS

.1 ASTM A653/A653M - Standard Specification for Steel Sheet, Zinc-Coated (Galvanized) or Zinc-Iron Alloy-Coated (Galvannealed) by the Hot-Dip Process 2020.

.2 ASTM C645 - Standard Specification for Nonstructural Steel Framing Members 2018.

.3 ASTM C754 - Standard Specification for Installation of Steel Framing Members to Receive Screw-Attached Gypsum Panel Products 2020.

.4 ASTM C1002 - Standard Specification for Steel Self-Piercing Tapping Screws for Application of Gypsum Panel Products or Metal Plaster Bases to Wood Studs or Steel Studs 2022.

.5 ASTM E90 - Standard Test Method for Laboratory Measurement of Airborne Sound Transmission Loss of Building Partitions and Elements 2009 (Reapproved

2016).

.6 ASTM E413 - Classification for Rating Sound Insulation 2022.

.7 CAN/ULC S702.1 - Standard for Mineral Fibre Thermal Insulation for Buildings, Part 1: Material Specification 2021.

.8 CSSBI S18 - Guide Specification for Non-loadbearing Steel Framing Current Edition.

.9 ULC (DIR) - Online Certifications Directory (Canada) Current Edition.

1.05 SUBMITTALS

.1 See Division 01, General and Supplementary conditions of the Contract, for submittal procedures.

.2 Shop Drawings:

.1 Indicate prefabricated work, component details, stud layout, framed openings, anchorage to structure, acoustic details, type and location of fasteners, accessories, and items of other related work.

.2 Describe method for securing studs to tracks, splicing, and for blocking and reinforcement of framing connections.

.3 Product Data: Provide data describing framing member materials and finish, product criteria, load charts, and limitations.

.4 Product Data: Provide manufacturer's data on partition head to structure connectors, showing compliance with requirements.

.5 Manufacturer's Installation Instructions: Indicate special procedures and perimeter conditions requiring special attention.

1.06 WASTE MANAGEMENT AND DISPOSAL

.1 Cooperate with the Waste Management Coordinator in the implementation of the Waste Management Plan specified in Division 01, General and Supplementary conditions of the Contract. Handle and dispose of waste materials generated by the work of this Section in accordance with the Waste Management Plan.

1.07 DESIGN REQUIREMENTS

.1 Prior to tender submission, the applicable steel stud *Contractor* is deemed to have reviewed and calculated for his own submission purposes, the required stud size, spacing and gauge, of all required stud assemblies, and if more restrictive than what is specified by the *consultants*, the applicable steel stud *Contractor* is deemed to have priced the more restrictive sizing in his tender submission. In no case will the applicable steel stud *Contractor* supply less than what is called for on the drawings.

PART 2 PRODUCTS

2.01 MANUFACTURERS

.1 Metal Framing, Connectors, and Accessories:

.2 This specification is based on light metal framing systems by Bailey Metal Products Ltd.

.1 Bailey Metal Products Limited; [_____]: www.bmp-group.com/#sle.

.3 Requests for substitutions will be considered in accordance with provisions of Division 01, General and Supplementary conditions of the Contract. Acceptance of alternative products is subject to the approval of the Consultant.

2.02 FRAMING MATERIALS

.1 Non-Loadbearing Framing System Components: ASTM C645; galvanized sheet steel, of size and properties necessary to comply with ASTM C754 and CSSBI S18 for the spacing indicated, with maximum deflection of wall framing of L/240 at 360 Pa for standard assemblies up to 3.6 m high, L/240 at 360 Pa for tall assemblies greater than 3.6 m high to a maximum of 3.6 m high, and L/240 at 480 psf for assemblies greater than 4.8 m high.

.2 Knock out service holes at 460 mm o.c. Thickness:

.1 Where not otherwise specified: 0.455 mm minimum acceptable thickness (95% of design thickness). Previous designation: 25 ga.

.2 Where abuse-resistant gypsum board or tile backer board is applied: 0.836 mm minimum acceptable thickness (95% of design thickness). Previous designation: 20 ga.

.3 Floor and ceiling tracks: to ASTM C645, in widths to suit stud sizes, Flange height 32 mm.

.1 Bottom channel: 32 mm.

.2 Deflection channel (fixed to u/s structure): 65 mm.

.3 Top channel: 50 mm.

.4 Bridging: fabricated from same material and finish as steel studs, 38 mm x 13 mm.

.5 Angle clips: fabricated from same material and finish as steel studs, 38 mm x 38 mm x depth of steel stud.

.6 Heavier gauge framing: Provide heavier gauge framing members and/or additional reinforcing where stud length and loading conditions require. Provide additional reinforcing for members carrying a concentrated load, such as door jambs.

.1 Studs: C shaped with flat or formed webs.

.2 Runners: U shaped, sized to match studs.

.3 Ceiling Channels: C shaped.

.4 Furring: Hat-shaped sections, minimum depth of 22 mm.

.7 Ceiling Hangers: Type and size as specified in ASTM C754 for spacing required.

.8 Partition Head to Structure Connections: Provide track fastened to structure with legs of sufficient length to accommodate deflection, for friction fit of studs cut short and braced with continuous bridging on both sides.

.9 Preformed Top Track Firestop Seal:

.1 Provide components ULC (DIR) listed for use in ULC-listed fire-rated head of partition joint systems indicated on Drawings.

.10 Tracks and Runners: Same material and thickness as studs, bent leg retainer notched to receive studs.

.11 Furring and Bracing Members: Of same material as studs; thickness to suit purpose; complying with applicable requirements of ASTM C754.

.12 Fasteners: ASTM C1002 self-piercing tapping screws.
.13 Sheet Metal Backing: 1.2 mm thick, galvanized.
.14 Acoustic Insulation: As specified in Section 07 21 00.
.15 Acoustic Sealant: Acrylic emulsion latex or water-based elastomeric sealant; do not use solvent-based non-curing butyl sealant.

2.03 FABRICATION

.1 Fabricate assemblies of framed sections to sizes and profiles required.
.2 Fit, reinforce, and brace framing members to suit design requirements.

PART 3 EXECUTION

3.01 EXAMINATION

.1 Verify existing conditions before starting work.
.2 Verify that rough-in utilities are in proper location.
.3 Examine areas and conditions under which work is to be performed and notify the *Contractor* in writing of conditions detrimental to the proper and timely completion of the work.
.4 Do not proceed with the work until unsatisfactory conditions have been corrected to the satisfaction of the installer.
.5 Take field measurements to verify or supplement dimensions.
.6 Commencement of the installation will be construed as acceptance of the site conditions and, thereafter, the Contractor shall be fully responsible for satisfactory work as specified herein.

3.02 INSTALLATION OF STUD FRAMING

.1 Comply with requirements of ASTM C754.
.2 Extend partition framing to structure where indicated and to ceiling in other locations.
.3 Align and secure top and bottom runners at 600 mm on center.
.4 At partitions indicated with an acoustic rating:
  .1 Provide components and install as required to produce STC ratings as indicated, based on published tests by manufacturer conducted in accordance with ASTM E90 with STC rating calculated in accordance with ASTM E413.
.5 **THE STUD *CONTRACTOR* IS RESPONSIBLE TO REVIEW THE ARCHITECTURAL DETAILS FOR CEILING TRACKS INSTALLATION TO ENSURE CONFORMITY WITH REQUIRED SPRAY FIREPROOFING INSTALLATIONS AND ULC ASSEMBLIES.**
.6 Fit runners under and above openings; secure intermediate studs to same spacing as wall studs.
.7 Install studs vertically at spacing indicated on Drawings.
.8 Place studs vertically at 400 mm o.c. and not more than 50 mm from abutting walls, and at each side of openings and corners. Position studs in tracks at floor and ceiling. Cross brace steel studs as required to provide rigid installation to manufacturer's instructions.

.9 Erect metal studding to tolerance of 1:1000.

.10 Extend partitions to underside of deck except where noted otherwise on drawings. Maintain clearance under deck, beams and joists to avoid transmission of structural loads to studs. Use double track slip joint.

- .1 Install 50 mm deep deflection channel at top of partitions.
- .2 Nest 65 mm deep top track into deflection channel a minimum of 30 mm and a maximum of 40 mm. Do not fasten tracks together.
- .3 Attach each stud to bottom and top tracks, using screws. For each stud, carefully align anchorages top and bottom.

.11 Align stud web openings horizontally.

.12 Secure studs to tracks using clip and tie method. Do not weld.

.13 Fabricate corners using a minimum of three studs.

.14 Double stud at wall openings, door and window jambs, not more than 50 mm from each side of openings.

.15 Coordinate installation of bucks, anchors, and blocking with electrical, mechanical, and other work to be placed within or behind stud framing.

.16 Furring: Coordinate with sound isolation clip spacing and locations. Lap splices a minimum of 150 mm.

.17 Brace steel studs with horizontal internal bridging at 1520 mm o.c. maximum. Fasten bridging to steel clips fastened to steel studs.

.18 Coordinate simultaneous erection of studs with installation of service lines. When erecting studs ensure web openings are aligned.

.19 Coordinate erection of studs with Section 08 11 13 - Hollow Metal Doors and Frames for the installation of steel door frames, with Section 06 10 00 - Rough Carpentry for the installation of wood blocking to support wall mounted items. Coordinate with the applicable other Sections for special supports or anchorage for work specified in other Sections.

.20 Provide two studs extending from floor to ceiling at each side of openings wider than stud centres specified. Secure studs together, 50 mm apart using column clips or other approved means of fastening placed alongside frame anchor clips.

.21 Erect track at head of door/window openings and sills of sidelight/window openings to accommodate intermediate studs. Secure track to studs at each end, in accordance with manufacturer's instructions. Install intermediate studs above and below openings in same manner and spacing as wall studs.

.22 Frame openings and around built in equipment, cabinets, access panels, on four sides. Extend framing into reveals. Check clearances with equipment suppliers.

.23 Provide 40 mm stud, furring channel or wood blocking, secured between studs for attachments to steel stud partitions.

.24 Install steel studs or furring channel between studs for attaching electrical and other boxes.

.25 Install continuous insulating strips to isolate studs from uninsulated surfaces.

.26 Install two continuous beads of acoustical sealant or insulating strip under studs and tracks around perimeter of sound control partitions.

3.03 CEILING AND SOFFIT FRAMING

.1 Install furring after work above ceiling or soffit is complete. Coordinate the location of hangers with other work.

.2 Install furring independent of walls, columns, and above-ceiling work.

.3 Securely anchor hangers to structural members or embed in structural slab. Space hangers as required to limit deflection to criteria indicated. Use rigid hangers at exterior soffits.

.4 Space main carrying channels at maximum 1 800 mm on center, and not more than 150 mm from wall surfaces. Lap splice securely.

.5 Securely fix carrying channels to hangers to prevent turning or twisting and to transmit full load to hangers.

.6 Place furring channels perpendicular to carrying channels, not more than 50 mm from perimeter walls, and rigidly secure. Lap splices securely.

END OF SECTION 09 22 16

SECTION 09 30 13
CERAMIC TILING

PART 1 GENERAL

1.01 RELATED DOCUMENTS

.1 Drawings and general provisions of the *Contract*, including General and Supplementary Conditions and Division 1 Specification Sections, apply to this Section.

1.02 SUMMARY OF WORK

.1 Work Included: The work of this Section includes the provision of all labour, materials, equipment and services required to install ceramic floor and wall tile, as indicated on the drawings, as specified herein and as required for a complete project

.2 Work

- .1 Tile for floor applications.
- .2 Tile for wall applications.
- .3 Ceramic accessories.
- .4 Non-ceramic trim.

1.03 RELATED REQUIREMENTS

.1 Division 03 Sections - Refer to Structural specifications

.2 Section 07 92 00 - Joint Sealants: Sealing joints between tile work and adjacent construction and fixtures.

.3 Section 09 00 00 - Master Finish Schedule (Refer to Drawings) *:

- .1 Floor and wall tile types sizes colours and textures.
- .2 Trim types, materials, profiles and colours

.4 Section 09 21 16 - Gypsum Board Assemblies: Tile backer board.

.5 Section 09 81 23 - Sound Attenuative Underlayment (as required)

1.04 DEFINITIONS

.1 Large Format Tile: Tile larger than 380 mm in one or more directions.

1.05 REFERENCE STANDARDS

.1 ANSI A108.1a - American National Standard Specifications for Installation of Ceramic Tile in the Wet-Set Method, with Portland Cement Mortar 2014.

.2 ANSI A108.1b - American National Standard Specifications for Installation of Ceramic Tile on a Cured Portland Cement Mortar Setting Bed with Dry-Set or Latex-Portland Cement Mortar 1999 (Reaffirmed 2010).

.3 ANSI A108.1c - Specifications for Contractors Option: Installation of Ceramic Tile in the Wet-Set Method with Portland Cement Mortar or Installation of Ceramic Tile on a Cured Portland Cement Mortar Bed with Dry-Set or Latex-Portland Cement 1999 (Reaffirmed 2010).

.4 ANSI A108.4 - American National Standard Specifications for Installation of Ceramic Tile with Organic Adhesives or Water Cleanable Tile-Setting Epoxy Adhesive 2009 (Revised).

.5 ANSI A108.5 - American National Standard Specifications for Installation of Ceramic Tile with Dry-Set Portland Cement Mortar or Latex-Portland Cement Mortar 1999 (Reaffirmed 2010).

.6 ANSI A108.6 - American National Standard Specifications for Installation of Ceramic Tile with Chemical Resistant, Water Cleanable Tile-Setting and -Grouting Epoxy 1999 (Reaffirmed 2010).

.7 ANSI A108.8 - American National Standard Specifications for Installation of Ceramic Tile with Chemical Resistant Furan Resin Mortar and Grout 1999 (Reaffirmed 2010).

.8 ANSI A108.9 - American National Standard Specifications for Installation of Ceramic Tile with Modified Epoxy Emulsion Mortar/Grout 1999 (Reaffirmed 2010).

.9 ANSI A108.10 - American National Standard Specifications for Installation of Grout in Tilework 1999 (Reaffirmed 2010).

.10 ANSI A108.13 - American National Standard for Installation of Load Bearing, Bonded, Waterproof Membranes for Thin-Set Ceramic Tile and Dimension Stone 2005 (Reaffirmed 2010).

.11 ANSI A108/A118/A136 - American National Standard Specifications for the Installation of Ceramic Tile (Compendium). 2017.

.12 ANSI A118.1 - American National Standard Specifications for Dry-Set Cement Mortar 2012 (Revised).

.13 ANSI A118.3 - American National Standard Specifications for Chemical Resistant, Water Cleanable Tile-Setting and -Grouting Epoxy and Water Cleanable Tile-Setting Epoxy Adhesive 2013 (Revised).

.14 ANSI A118.4 - American National Standard Specifications for Modified Dry-Set Cement Mortar 2012 (Revised).

.15 ANSI A118.6 - American National Standard Specifications for Standard Cement Grouts for Tile Installation 2010 (Reaffirmed 2016).

.16 ANSI A118.10 - American National Standard Specifications for Load Bearing, Bonded, Waterproof Membranes For Thin-Set Ceramic Tile And Dimension Stone Installation 2014.

.17 ANSI A118.15 - American National Standard Specifications for Improved Modified Dry-Set Cement Mortar 2012.

.18 ANSI A136.1 - American National Standard for Organic Adhesives for Installation of Ceramic Tile 2008 (Reaffirmed 2013).

.19 ASTM C847 - Standard Specification for Metal Lath 2018.

.20 ASTM C920 - Standard Specification for Elastomeric Joint Sealants 2018.

.21 ASTM C1178/C1178M - Standard Specification for Coated Glass Mat Water-Resistant Gypsum Backing Panel 2018.

.22 CSA A3000 - Cementitious Materials Compendium 2018.

.23 TTMAC (IM) - Tile Installer Technical Handbook 2018/2019.

.24 CAN/CGSB-75.1-M88, Tile, Ceramic.

.25 CGSB 71-GP-30-1979, Adhesive, Epoxy and Modified Mortar Systems, for Installation of Quarry Tiles.

1.06 SUBMITTALS

.1 See Division 01, General and Supplementary conditions of the Contract, for submittal procedures.

.2 Product Data: Provide manufacturers' data sheets on tile, mortar, grout, and accessories. Include instructions for using grouts and adhesives.

.3 Product Data:

.1 Submit manufacturer's information on:

.1 Ceramic tile, marked to show each type, size, and shape required.
.2 Chemical resistant mortar and grout (Epoxy and Furan).
.3 Cementitious backer unit.
.4 Dry-set Portland cement mortar and grout.
.5 Divider strip.
.6 Elastomeric membrane and bond coat.
.7 Reinforcing tape.
.8 Leveling compound.
.9 Latex-Portland cement mortar and grout.
.10 Commercial Portland cement grout.
.11 Organic adhesive.
.12 Slip resistant tile.
.13 Waterproofing isolation membrane.
.14 Fasteners.

.4 Samples:

.1 Base tile: submit sample of each colour, texture, size and pattern of tile.

.2 Floor tile: sample panel of each colour, texture, size and pattern of tile. Each panel to be 2 tiles wide x 2 tiles long (4 tiles in total), complete with grouted joints.

.3 Trim shapes, bullnose cap and cove including bullnose cap and base pieces at internal and external corners of vertical surfaces, each type, colour and size.

.4 Wall Tile: sample panel of each colour, texture, size and pattern of tile. Each panel to be 2 tiles wide x 2 tiles (4 tiles in total), complete with grouted joints.

.5 Adhere tile samples to 11 mm thick plywood and grout joints to represent project installation.

.5 Maintenance Data:

.1 Provide maintenance data for cleaning and maintenance of ceramic and quarry tile floors and walls for incorporation into the manual specified in Division 01, General and Supplementary conditions of the Contract.

.2 Maintenance Material

.1 Provide 2% of installed quantity of each type and colour of tile and base required for the project, for maintenance use. Store where directed.

.2 Maintenance material to be of same production run as installed material.

.3 Do not use maintenance materials for the correction of deficiencies or remedial work during the warranty period.

1.07 MOCK-UP

.1 See Division 01, General and Supplementary conditions of the Contract, for general requirements for mock-up.

.2 Construct tile mock-up where indicated on *Drawings*, incorporating all components specified for the location.

.1 Minimum size of mock-up is indicated on *Drawings.*

.2 Approved mock-up may remain as part of the *Work.*

.3 Demolish mock-up when directed by *Consultant*, and remove debris from the site.

1.08 QUALITY ASSURANCE

.1 Maintain one copy of ANSI A108/A118/A136 installation standards and TTMAC (IM) on site.

1.09 DELIVERY, STORAGE, AND HANDLING

.1 Protect adhesives from freezing or overheating in accordance with manufacturer's instructions.

.2 Deliver materials in containers with labels legible and intact and grade-seals unbroken.

.3 Store material so as to prevent damage or contamination.

.4 Store materials in dry area, protected from freezing, staining and damage.

.5 Store cementitious materials on a dry surface.

1.10 ENVIRONMENTAL CONDITIONS

.1 Do not install solvent-based products in an unventilated environment.

.2 Maintain ambient and substrate temperature no lower than 12 degrees C during installation of mortar materials.

.3 Maintain air temperature and structural base temperature at ceramic tile installation for 48 hours before, during, and 48 hours after, installation.

PART 2 PRODUCTS

2.01 MANUFACTURERS

.1 The surface preparation materials, setting bed, and grout specification is based on products by Mapei Inc.

.2 Subject to compliance with the specification requirements, equivalent products by the following manufacturers are acceptable alternatives:

.1 Flextile

.2 Laticrete International Inc.

.3 Alpha-Vico Canada Ltd.

.4 TEC Inc., and H.B. Fuller Company, distributed by Centura.

.3 Requests for substitutions will be considered in accordance with provisions of Division 01, General and Supplementary conditions of the *Contract*. Acceptance of alternative products is subject to the approval of the *Consultant.*

2.02 TILE

.1 Floor tile, base tile, wall tile: Refer to Section 09 00 00 - Master Finish Schedule (Refer to Drawings) *

.2 Neatly cut and grind edges of tiles as required, at bases and at edges at exposed perimeters of tiling.

.3 All cut edges shall be machine-cut and arises (edges) shall be ground and bevelled to match manufactured edges.

.4 ALL TILE CORNERS, EXPOSED EDGES AND TERMINATIONS TO BE TERMINATED WITH SCHLUTER TRIM

.1 Schluter Quadex

.2 Schluter Dilex

2.03 TRIM AND ACCESSORIES

.1 Ceramic Accessories: Glazed finish, same colour and finish as adjacent field tile; same manufacturer as tile.

.2 Non-Ceramic Trim: Schluter , style and dimensions as indicated on Drawings, for setting using tile mortar or adhesive.

2.04 SETTING MATERIALS

.1 Dry-Set Portland Cement Mortar Bond Coat: ANSI A118.1.

.1 Kerabond dry set mortar.

.2 Keralastic polymer additive.

2.05 GROUTS AND ADHESIVES

.1 Grout: Flextile 500P.M, Flextile 600 polymer modified sanded grout, or Flextile 100 Flex Epoxy grout as applicable.

.2 Colours as per *Drawings*, to be confirmed by the *Consultant*.

.3 Standard Grout: ANSI A118.6 standard cement grout.

.1 Applications: Use this type of grout where indicated and where no other type of grout is indicated.

.2 Use sanded grout for joints 1/8 inch wide and larger; use unsanded grout for joints less than 1/8 inch wide.

.3 Products:

.1 Grout: Flextile 500P.M. unsanded grout, or Flextile 600 polymer modified sanded grout, as applicable.

.2 Additive: Flextile 6000 Grout optimizer

.3 Colours as per *Drawings*, to be confirmed by the Consultant.

.4 Epoxy Grout: ANSI A118.3 chemical resistant and water-cleanable epoxy grout.

.1 Applications: As indicated in Drawings.

.2 Colour(s): As indicated on Drawings, to be confirmed by *Consultant.*

.3 Products:

2.06 ACCESSORY MATERIALS

.1 Waterproofing Membrane: Specifically designed for bonding to cementitious substrate under thick mortar bed or thin-set tile; complying with ANSI A118.10.

.2 Backer Board: See Section 09 21 16 - Gypsum Board Assemblies.

PART 3 EXECUTION

3.01 EXAMINATION

.1 Verify that sub-floor surfaces are smooth and flat within the tolerances specified for that type of work and are ready to receive tile.

.2 Verify that wall surfaces are smooth and flat within the tolerances specified for that type of work, are dust-free, and are ready to receive tile.

.3 Verify that sub-floor surfaces are dust-free and free of substances that could impair bonding of setting materials to sub-floor surfaces.

.4 Verify that concrete sub-floor surfaces are ready for tile installation by testing for moisture emission rate and alkalinity; obtain instructions if test results are not within limits recommended by tile manufacturer and setting materials manufacturer.

.5 Examine areas and conditions under which work is to be performed and notify the *Contractor* in writing of conditions detrimental to the proper and timely completion of the work.

.6 Do not proceed with the work until unsatisfactory conditions have been corrected to the satisfaction of the installer.

.7 Take field measurements to verify or supplement dimensions.

.8 Commencement of the installation will be construed as acceptance of the site conditions and, thereafter, the Contractor shall be fully responsible for satisfactory work as specified herein.

3.02 PREPARATION

.1 Protect surrounding work from damage.

.2 Seal substrate surface cracks with filler. Level existing substrate surfaces to acceptable flatness tolerances.

.3 Apply tile or backing coats to clean and sound surfaces which are true to line, plumb, level or uniformly sloping to floor drains, as applicable.

.4 Use patching and/or levelling compounds, in accordance with manufacturer's instructions, to correct any defects in the substrate.

.5 Ensure that floor drains are in place before installation of floor tiles.

3.03 INSTALLATION - GENERAL

.1 Install tile, thresholds, and stair treads and grout in accordance with applicable requirements of ANSI A108.1a through ANSI A108.13, manufacturer's instructions and TTMAC (IM) recommendations.

.2 Lay tile to pattern indicated. Do not interrupt tile pattern through openings.

.3 Cut and fit tile to penetrations through tile, leaving sealant joint space. Form corners and bases neatly. Align floor and wall joints.

.4 Place tile joints uniform in width, subject to variance in tolerance allowed in tile size. Make grout joints without voids, cracks, excess mortar or excess grout, or too little grout.

.5 Form internal angles square and external angles bullnosed.

.6 Install ceramic accessories rigidly in prepared openings.

.7 Install non-ceramic trim in accordance with manufacturer's instructions.

.8 Install thresholds where indicated.

.9 Sound tile after setting. Replace hollow sounding units.

.10 Keep control and expansion joints free of mortar, grout, and adhesive.

.11 Prior to grouting, allow installation to completely cure; minimum of 48 hours.

.12 Grout tile joints unless otherwise indicated. Use standard grout unless otherwise indicated.

.13 At changes in plane and tile-to-tile control joints, use flexible grout, with either bond breaker tape or backer rod as appropriate to prevent three-sided bonding.

3.04 INSTALLATION - FLOORS - THIN-SET METHODS

.1 Over concrete substrates, install in accordance with TTMAC (IM) 311F, Detail A (interior/exterior).

.1 Use uncoupling membrane under tile unless other underlayment is indicated.

.2 Install waterproofing membrane where indicated, in accordance with manufacturer's written instructions and TTMAC (IM) requirements.

.3 Install epoxy bond coat and grout coat where indicated, in accordance with manufacturer's written instructions and TTMAC (IM) requirements.

3.05 INSTALLATION - WALL TILE

.1 Over cementitious backer units, install in accordance with TTMAC (IM) 305W, Detail A, using waterproofing membrane at toilet rooms.

.2 Over coated glass mat backer board, install in accordance with TTMAC (IM), 305W, Detail B.

.3 Over gypsum board on wood or metal studs, install in accordance with TTMAC (IM) 304W, thin set method.

.1 Where waterproofing membrane is indicated other than at showers and bathtub walls, install in accordance with manufacturer's written instructions and TTMAC (IM) requirements.

3.06 WATERPROOFING MEMBRANE INSTALLATION

.1 Apply waterproof membrane where indicated on the drawings.

.2 Apply tile setting adhesive to substrate with tile setting adhesive, using a 4.5 mm V notch trowel.

.3 Work waterproofing membrane into adhesive with a flat trowel to achieve full contact and to remove air pockets.

.4 Overlap and seal membrane seams a minimum 50 mm. Tightly butt adjacent sheets and cover with a 125 mm strip of waterproofing membrane sealed to primary membranes.

.5 Provide strips of waterproofing where required to span expansion joints or terminate waterproofing into movement joint type tile setting accessories, as detailed in accordance with the manufacturer's instructions.

.6 Adhere waterproofing membrane to fixtures, joints around pipes, and other penetrations with transparent waterproof sealant.

3.07 CLEANING

.1 Clean tile and grout surfaces.

.2 Remove from the premises all surplus material, dirt and debris caused by the Work of this section and leave the installation clean.

.3 Clean any drippage and spills of surplus materfrom adjacent surfaces.

.4 Make good damage to other work caused by the Work of this section

3.08 PROTECTION

.1 Do not permit traffic over finished floor surface for 4 days after installation.

END OF SECTION 09 30 13

SECTION 09 65 00
RESILIENT FLOORING

PART 1 GENERAL

1.01 RELATED DOCUMENTS

.1 *Drawings* and general provisions of the *Contract*, including General and Supplementary Conditions and Division 1 Specification Sections, apply to this Section.

1.02 RELATED REQUIREMENTS

.1 Cast-in-Place Concrete in Structural Drawings and Specifications: Restrictions on curing compounds for concrete slabs and floors.

1.03 REFERENCE STANDARDS

.1 ASTM E84 - Standard Test Method for Surface Burning Characteristics of Building Materials 2022.

.2 ASTM E648 - Standard Test Method for Critical Radiant Flux of Floor-Covering Systems Using a Radiant Heat Energy Source 2019a, with Editorial Revision (2020).

.3 ASTM F137-08 - Standard Test Method For Flexibility Of Resilient Flooring Materials With Cylindrical Mandrel Apparatus 2018.

.4 ASTM F1066 - Standard Specification for Vinyl Composition Floor Tile 2004 (Reapproved 2018).

1.04 SUBMITTALS

.1 Product Data: Provide data on specified products, describing physical and performance characteristics; including sizes, patterns and colours available; and installation instructions.

.2 Shop Drawings: Indicate seaming plans and floor patterns.

.3 Selection Samples: Submit manufacturer's complete set of colour samples for Consultant's initial selection.

.4 Verification Samples: Submit two samples, 300 by 300 mm in size illustrating colour and pattern for each resilient flooring product specified.

.5 Material Safety Data Sheet (MSDS) for all adhesive products.

.6 Maintenance Data: Include manufacturer's maintenance procedures, recommended maintenance materials, and suggested schedule for cleaning, stripping, and re-waxing.

.7 Maintenance Materials: Furnish the following for *Owner'*s use in maintenance of project.

- .1 See Section 01 61 00 - Common Product Requirements, for additional provisions.
- .2 Provide maintenance materials of resilient tile flooring, base and adhesive in accordance with the following requirements:
  - .1 Extra Flooring Material: 2% of each type and colour, include adequate adhesive for each flooring type.
  - .2 Extra Wall Base: 2% of each type and colour, include adequate adhesive for each base type.
  - .3 Extra materials to be from the same production run as installed materials.
  - .4 Clearly itendity each container of floor tile and each container of adhesive.

.5 Deliver to *Owner* upon completion of the work of this section.
.6 Do not use maintenance materials for the correction of deficiencies or remedial work during the warranty period.

1.05 SITE CONDITIONS

.1 Store materials for not less than 48 hours prior to installation in area of installation at a temperature of 21 degrees C, maintain tempurature during and 48 hours after installation. Thereafter, maintain conditions above 13 degrees C.

1.06 WASTE MANAGEMENT AND DISPOSAL

.1 Separate and recyle water materials in accordance with Section 01 74 19 - Construction Waste Management and Disposal

Remove from site and dispose of packaging materials at

.2 Collect and separate for disposal paper, plastic, polystyrene and corrugated cardboard packaging material for recycling in accordance with Waste Management Plan.

.3 Dispose of unused finish and adhesive materials at official hazardous material collections site.

.4 Do not dispose of unused finish and adhesive materials into sewer system, streams, lakes onto ground or in other locations where it will pose health or environmental hazard.

1.07

PART 2 PRODUCTS

2.01 TILE FLOORING

.1 Vinyl Composition Tile: Homogeneous, with colour extending throughout thickness.

.1 Manufacturers:
.2 Minimum Requirements: Comply with ASTM F1066, of Class corresponding to type specified.
.3 Size: As per Drawings.
.4 Thickness: 3.2 mm.
.5 Colour: As indicated on Drawings.

2.02 RESILIENT BASE

.1 Resilient Wall Base:

.1 Manufactured from a homogeneous composition of polyvinyl chloride (PVC).
.2 Meets performance requirements for ASTM F1861 Standard Specification for Resilient Wall Base, Type TV, Group 1.
.3 ASTM E648, Standard Test Method for Critical Radiant Flux of 0.45 watts/cm^2 or greater, Class I.
.4 ASTM E84 Standard Test Method for Surface Burning Characteristics of Building Materials, Class B, Smoke <450.
.5 Flexibility: Does not crack, break, or show any signs of fatigue when bent around a 1 1/4" diameter cylinder when tested according to ASTM F137-08 Standard Test Method for Flexibility of Resilient Flooring Materials protocols.
.6 Phalate free except for recycled materials.

.7 Johnsonite Traditional Vinyl Wall Base:
- .1 Thickness: 1/8" thick
- .2 Colour: As indicated on *Drawings*.
- .3 Profile: As indicated on *Drawings.*
- .4 Height: 4"

.8 Johnsonite Traditional Vinyl Wall Vase Preformed Corners
- .1 Thickness: 1/8" thick
- .2 Colour: As indicated on *Drawings.*
- .3 Profile: As indicated on *Drawings.*
- .4 Height: 4"

2.03 ACCESSORIES

.1 Subfloor Filler: White premix latex requiring water only to produce cementitious paste as recommended by flooring manufacturer for use with their product.

.2 Primer and adhesive for Vinyl Flooring: As per manufacturer's written instructions for specific material on applicable substrate, above, at or below grade.

.3 Transition strips: Aluminum extreuded, smooth, mill finish with lip to extend under floor finish, shoulder flush with top of adjacent floor finish.
- .1 Acceptable product: Schluter Systems.

.4 Sealer: Type 2-water based, as per manufacturer's recommendations.

.5 Wax: Type as per manufacturer's recommendations.

PART 3 EXECUTION

3.01 EXAMINATION AND PREPARATION

.1 Verify that surfaces are flat to tolerances acceptable to flooring manufacturer, free of cracks that might telegraph through flooring, clean, dry, and free of curing compounds, surface hardeners, and other chemicals that might interfere with bonding of flooring to substrate.
- .1 Remove sub-floor ridges and bumps. Fill low spots, cracks, joints, holes and other defects with sub-floor filler.

.2 Cementitious Sub-floor Surfaces: Verify that substrates are dry enough and ready for resilient flooring installation by testing for moisture and pH.
- .1 Obtain instructions if test results are not within limits recommended by resilient flooring manufacturer and adhesive materials manufacturer.

.3 Starting installation constitutes acceptance of sub-floor conditions.

3.02 INSTALLATION - GENERAL

.1 Provide high ventilation rate, with maximum outside air, during installation and for 48 to 72 hours after installation. If possible, vent directly to the outside. Do not let contaminated air recirculate through a district of whole building air distribution system.

.2 Install in accordance with manufacturer's written instructions.

.3 Apply adhesive uniformly using recommended trowel in accordance with flooring manufacturer's instructions. Do not spread more adhesive than can be covered by flooring before initial set takes place. Follow manufacturer’s written instructions.

.4 Lay flooring with joints parallel to building lines to produce symmetrical tile pattern. Border tiles minimum half tile width.

.5 Install flooring to ashlar/staggered pattern with continuous joints flowing with direction of mottle with pattern grain parallel for all units and parallel to length of room.

.6 Mix tile from container to ensure shade variations are consistent when tile is placed, unless otherwise indicated in manufacturer's installation instructions.

.7 Cut tile and fit neatly around fixed objects

.8 Set flooring in place, press with heavy roller to attain full adhesion.

.9 Where type of floor finish, pattern, or colour are different on opposite sides of door, terminate flooring under centerline of door.

.10 Install edge strips at unprotected or exposed edges, where flooring terminates, and where indicated.

.11 Scribe flooring to walls, columns, cabinets, floor outlets, and other appurtenances to produce tight joints.

3.03 INSTALLATION - RESILIENT BASE

.1 Lay out base to keep number of joints at minimum. Base joints at maximum length available or at internal or premoulded corners.

.2 Clean substrate and prime with one coat of adhesive.

.3 Apply adhesive to back of base.

.4 Set base against wall and floor surfaces tightly by using 3 kg hand roller.

.5 Install straight and level to variation of 1:1000.

.6 Scribe and fit to door frames and other obstructions. Use premoulded end pieces at flush door frames.

.7 Cope internal corners. Use premoulded corner units for right angle external corners. Use formed straight base material for external corners of other angles, minimum 300 mm each leg. Wrap around toeless base at external corners.

.8 Install base on solid backing. Bond tightly to wall and floor surfaces.

3.04 CLEANING

.1 Remove excess adhesive from floor, base, and wall surfaces without damage.

.2 Clean, seal and wax floor and base surface to flooring manufacturer's instructions. In carpeted areas clean, seal and wax base surface before carpet installation.

3.05 PROTECTION

.1 Protect new floors from time of final set of adhesive until final inspection.

.2 Prohibit traffic on resilient flooring for 48 hours after installation.

.3 Cover and protect floors in accordance with instructions in Section 01 11 00 - Summary of Work

END OF SECTION 09 65 00

SECTION 09 69 00.01
APPENDIX A - WALKING SURFACE INDICATOR TILE * (1 PAGE ATTACHED)

SEE ATTACHED SECTION

Kinesik Tactile Walking Surface Indicator Tile
ACC-S-1212

FOR ALL STAIRS AND EXTERIOR SIDEWALK TRANSITIONS, INDICATION TILES AND/OR S/S TACTILE WARNING SURFACES TO BE USED IN CONFORMANCE WITH THE REQUIREMENTS OF THE BUILDING CODE OF THE PROVINCE OF THE PROJECT AND ANY OTHER REGULATIONS OF THE AUTHORITIES HAVING JURISDICTION – CONFIRM WITH DRAWING DETAILS.

FOR EXTERIOR SIDEWALKS COORDINATE WITH CIVIL DRAWINGS FOR SCOPE AND RESPONSIBILITY FOR SUPPLY AND INSTALL.

END OF SECTION 09 69 00.01

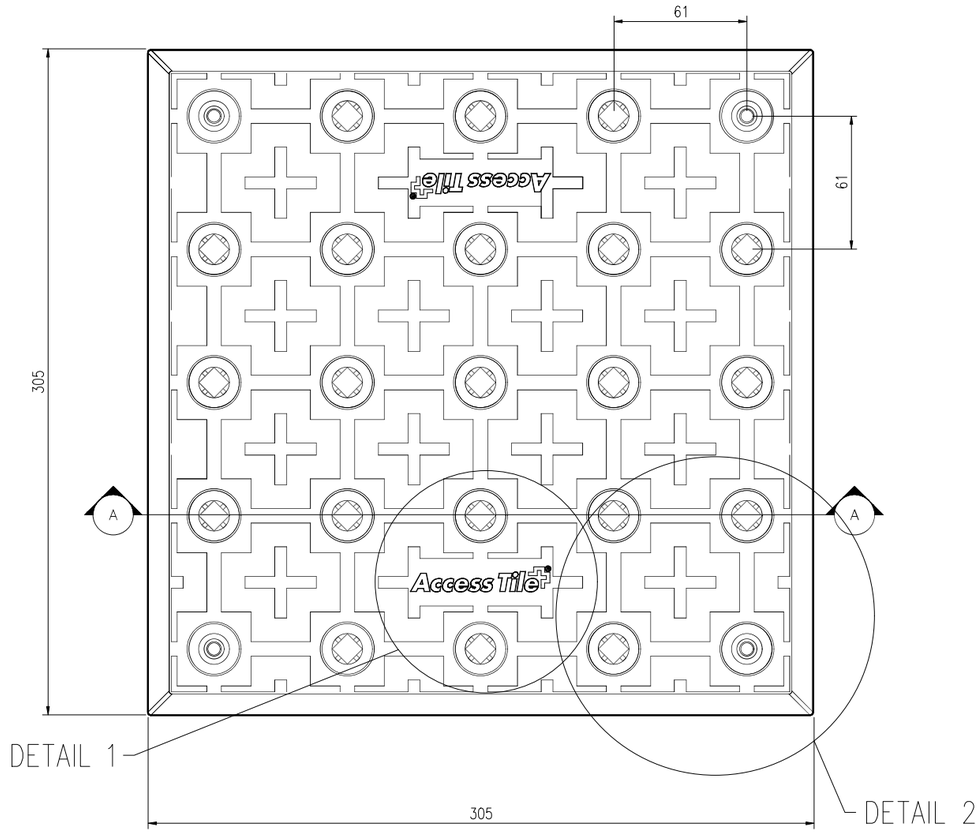

PLAN VIEW

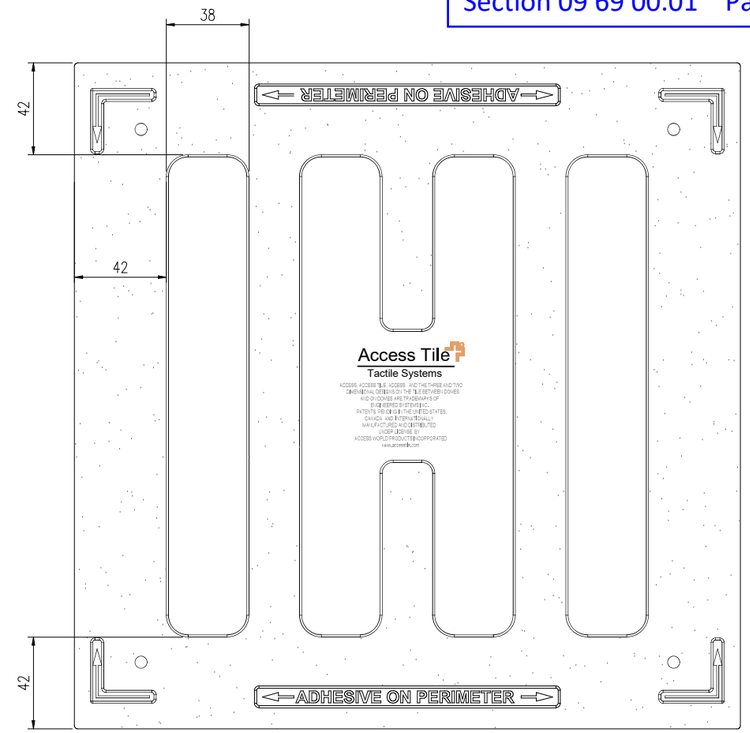

UNDERSIDE VIEW

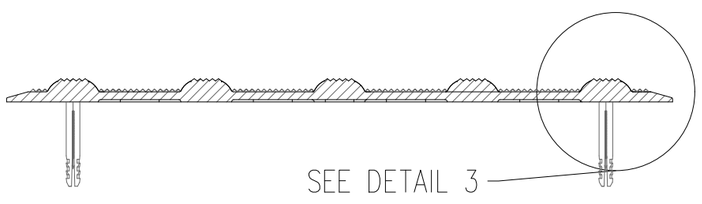

SECTION A-A

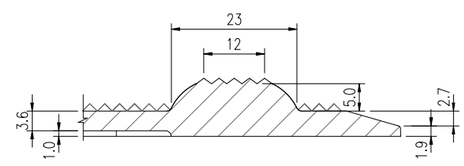

DETAIL 3

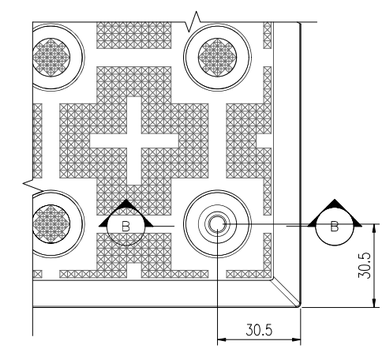

DETAIL 2

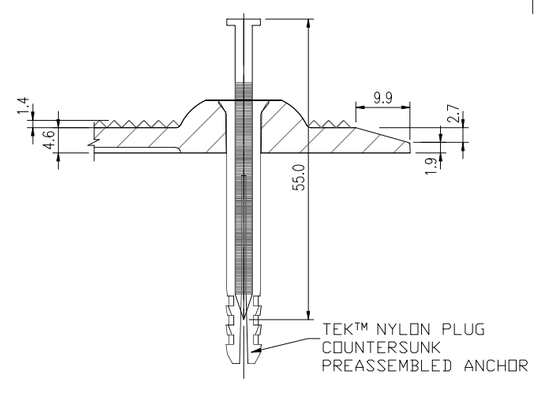

SECTION B-B

DETAIL 1

KINESIK

ENGINEERED PRODUCTS

www.kinesik.ca

© KINESIK ENGINEERED PRODUCTS

ACCESS, ACCESS TILE, ACCESS + AND THE TWO AND THREE DIMENSIONAL DESIGNS ON THE DOMES ARE TRADEMARKS OF ENGINEERED SYSTEMS INC.
PATENTS PENDING IN THE USA, CANADA AND INTERNATIONALLY. DISTRIBUTED UNDER LICENSE BY KINESIK ENGINEERED PRODUCTS.

© KENNETH E. SZEKELY

MATERIAL LIST

ITEM	DESCRIPTION	PART NO.	QTY
1	ACCESS TILE	ACC–S–1212	1
2	TeK™ ANCHOR	ADA–FAST	4
3	TACTILE BOND AND SEAL	TBS–010	1 ea

NOTE: ANCHORS ARE INCLUDED AND ASSEMBLED ON TILE.

REFERENCE DRAWINGS

DWG. NO.	DESCRIPTION

No.	DATE	REVISION	APPR.

SCALE N.T.S.

DESIGNED	KES	DATE	09/15/2014
DRAWN	M.T.		20/07/2017
DRAWN	D.D.		
PROJECT MANAGER			
TRADE	TWSI	PART NO.	ACC–S–1212
MATERIAL	POLYMER COMPOSITE		

SUBJECT Access Tile™

TRUNCATED DOME, TACTILE WALKING SURFACE INDICATOR TILE

PROJECT

TRUNCATED DOME, TACTILE WALKING SURFACE INDICATOR 305 x 305 SURFACE APPLIED INLINE DOME TILE DRAWING

DRAWING NO.	REV. NO.
ACC-S-1212	0

SECTION 09 91 00
PAINTING *

PART 1 GENERAL

1.01 RELATED DOCUMENTS

.1 Drawings and general provisions of the Contract, including General and Supplementary Conditions and Division 1 Specification Sections, apply to this Section.

1.02 SUMMARY OF WORK

.1 Work Included: The work of this Section includes the provision of all labour, materials, equipment and services required to execute interior and exterior painting work, as indicated on the drawings, as specified herein and as required for a complete project.

1.03 RELATED SECTIONS:

.1 Section 05 50 00 - Metal Fabrications
.2 Section 05 51 00 - Metal Stairs
.3 Section 06 20 00 - Finish Carpentry
.4 Section 07 81 00 - Applied Fireproofing
.5 Section 08 11 13 - Hollow Metal Doors and Frames
.6 Section 08 14 16 - Flush Wood Doors
.7 Section 09 00 00 - Master Finish Schedule (Refer to Drawings) *
.8 Section 09 21 16 - Gypsum Board Assemblies
.9 For Mechanical and Electrical items,
  .1 Refer Mechanical and Electrical drawings.

1.04 DEFINITIONS

.1 *Comply with ASTM D16 for interpretation of terms used in this section.*

1.05 REFERENCES

.1 ASTM D16 - Standard Terminology for Paint, Related Coatings, Materials, and Applications; 2016.
.2 ASTM D4259 - Standard Practice for Preparation of Concrete by Abrasion Prior to Coating Application ; 2018
.3 ASTM D4260 - Standard Practice for Liquid and Gelled Acid Etching of Concrete; 2005 (Reapproved 2012).
.4 ASTM D4442 - Standard Test Methods for Direct Moisture Content Measurement of Wood and Wood-Based Materials; 2020.
.5 ASTM F1869 - Standard Test Method for Measuring Moisture Vapor Emission Rate of Concrete Subfloor Using Anhydrous Calcium Chloride; 2016a.
.6 Master Painters Institute (MPI):
  .1 MPI Architectural Specification Manual, 2004 (referred to herein as "MPI Manual")
  .2 MPI Approved Product List (Referred to herein as "MPI APL").
.7 MPI (APL) - Master Painters Institute Approved Products List; Master Painters and Decorators Association Current Edition.

.8 MPI (APSM) - Master Painters Institute Architectural Painting Specification Manual Current Edition.
.9 SSPC V1 (PM1) - Good Painting Practice: Painting Manual, Volume 1 2016.
.10 SSPC V2 (PM2) - Systems and Specifications: Steel Structures Painting Manual, Volume 2 2015.
.11 SSPC-SP 1 - Solvent Cleaning; 2015, with Editorial Revision (2016).
.12 SSPC-SP 2 - Hand Tool Cleaning; 2018
.13 SSPC-SP 3 - Power Tool Cleaning; 2018
.14 SSPC-SP 6 - Commercial Blast Cleaning 2007.
.15 SSPC-SP 13 - Surface Preparation of Concrete; 2018
.16 Health Canada/Workplace Hazardous Materials Information System (WHMIS)
.1 Material Safety Data Sheets (MSDS).

1.06 SUBMITTALS

.1 General: Submit each item in this Article according to the Conditions of the Contract and the applicable Division 01 Specification Sections.

1.07 PRODUCT DATA:

.1 Submit product data and instructions for each paint and coating product to be used.
.2 Submit product data for the use and application of paint thinner.
.3 Submit 2 copies of Workplace Hazardous Materials Information System (WHMIS) Material Safety Data Sheets (MSDS) Indicate VOCs during application and curing.
.4 Submit certificates signed by manufacturer certifying that materials comply with specified performance characteristics and physical properties.
.5 Submit manufacturer's application instructions.

1.08 STORAGE AND HANDLING

.1 Storage and Protection:
.1 Provide and maintain dry, temperature controlled, secure storage.
.2 Store materials and supplies away from heat generating devices.
.3 Store materials and equipment in well ventilated area within temperature as recommended by manufacturer.

1.09 FIRE SAFETY REQUIREMENTS:

.1 Provide one 9 kg dry chemical fire extinguisher adjacent to storage area.
.2 Store oily rags, waste products, empty containers and materials subject to spontaneous combustion in ULC approved, sealed containers and remove from site on a daily basis.
.3 Handle, store, use and dispose of flammable and combustible materials in accordance with National Fire Code of Canada requirements.

1.10 SITE CONDITIONS

.1 Heating, Ventilation and Lighting:
.1 Ventilate enclosed spaces.

.2 Provide minimum lighting level of 323 Lux on surfaces to be painted.

.2 Temperature, Humidity and Substrate Moisture Content Levels:

.1 Apply paint finishes when ambient air and substrate temperatures at location of installation can be satisfactorily maintained during application and drying process, within MPI and paint manufacturer's prescribed limits.

.2 Test concrete, masonry and plaster surfaces for alkalinity as required.

.3 Apply paint to adequately prepared surfaces, when moisture content is below paint manufacturer's prescribed limits.

.3 Airborne Dust: Apply paint finish in areas where dust is no longer being generated by related construction operations or when wind or ventilation conditions are such that airborne particles will not affect quality of finished surface.

1.11 WASTE MANAGEMENT AND DISPOSAL

.1 Cooperate with the Waste Management Coordinator in the implementation of the Waste Management Plan specified in Division 01, General and Supplementary conditions of the Contract. Handle and dispose of waste materials generated by the work of this Section in accordance with the Waste Management Plan.

PART 2 PRODUCTS

2.01 MANUFACTURERS

.1 Subject to compliance with specification requirements, the following manufacturers are acceptable:

.1 Benjamin Moore and Co. Canada

.2 PPG Canada Inc.

.3 Sherwin-Williams

.4 SICO Inc.

.2 Alternate will not be considered.

.3 Substitutions are not permitted.

2.02 MATERIALS

.1 Only paint materials listed in the MPI Approved Products List (APL) are acceptable for use on this project.

.2 Provide paint materials for each paint system from a single manufacturer.

.3 Conform to latest MPI requirements for all painting work including preparation and priming.

.4 Materials (primers, paints, coatings, varnishes, stains, lacquers, fillers, thinners, solvents, etc.) in accordance with MPI Manual and APL.

.5 Provide paint products meeting MPI "Environmentally Friendly" E2 rating or better, based on VOC (EPA Method 24) content levels. Where the APL lists products with E3 rating, select products from among those which have the E3 rating.

2.03 COLOURS

.1 For paint colours refer to Section 09 00 00 - Master Finish Schedule (Refer to Drawings) *.

.2 For paint colours refer to drawings.

2.04 MIXING AND TINTING

.1 Perform colour tinting operations prior to delivery of paint to site, in accordance with manufacturer's written instructions. Obtain written approval from the *Owner* and *Consultan*t for tinting of painting materials.

.2 Use and add thinner in accordance with paint manufacturer's recommendations. Do not use kerosene or similar organic solvents to thin water-based paints.

.3 Thin paint for spraying in accordance with paint manufacturer's instructions.

.4 Re-mix paint in containers prior to and during application to ensure break-up of lumps, complete dispersion of settled pigment, and colour and gloss uniformity.

2.05 GLOSS/SHEEN RATINGS

.1 Paint gloss is defined as sheen rating of applied paint, in accordance with following values:

Gloss Level	Description	Gloss @ 60o	Gloss @ 85o
1	Matte or flat finish	max. 5	max. 10
2	Velvet-like finish	max. 10	10 to 35
3	Eggshell finish	10 to 25	10 to 35
4	Satin-like finish	20 to 35	min. 35
5	Traditional semi-gloss finish	35 to 70	
6	Traditional gloss finish	70 to 85	
7	High-gloss finish	> 85	

.2 Gloss level ratings of painted surfaces as specified herein.

2.06 EXTERIOR PAINTING

.1 Paint exterior surfaces in accordance with the following MPI Architectural Specification Manual requirements, premium Grade throughout.

.2 For asphalt surfaces, zone/traffic lines for drive and parking areas, etc., apply EXT 2.1A, Latex Zone/Traffic Marking Paint.

.3 For steel surfaces to receive paint finish, apply EXT 5.1D: Alkyd, G6 finish, Premium grade.

.4 For galvanized metal surfaces (not chromate passivated) to receive paint finish, apply EXT 5.3B: Alkyd, G6 finish, Premium grade. **ENSURE PROPER PRIMER IS USED FOR ALL GALVANIZED SURFACES**

.5 For dimension lumber to receive stain finish, apply EXT 6.2B: Waterborne solid colour stain finish, Premium grade.

.6 For dressed lumber to receive paint finish, apply EXT 6.3A: Latex, G5 finish, Premium grade.

2.07 INTERIOR PAINTING

.1 Paint interior surfaces in accordance with the following MPI Architectural Specification Manual requirements, premium Grade throughout.

.2 For structural steel and metal fabrications: columns, beams, joists

.1 INT 5.1S - Institutional low odour/low VOC G6 finish, Premium grade.

.2 INT 5.1Z - Quick dry shop paint finish (for dry locations only). Custom grade.

.3 For steel-high heat: (boilers, furnaces, heat exchangers, breeching, pipes, flues, stacks, etc., with temperature range as noted):

.1 INT 5.2A - Heat resistant enamel finish, maximum 205 degrees C.

.2 INT 5.2D - High heat resistant coating, maximum 593 degrees C.

.4 For galvanized metal: doors, frames, railings, misc. steel pipes, overhead decking, and ducts.

.1 INT 5.3A - Latex G5 finish, Premium grade.

.2 INT 5.3N - Institutional low odour/low VOC G5 finish, Premium grade.

.5 For dressed lumber: including doors, door and window frames, casings, mouldings:

.1 INT 6.3C - Semi-transparent stain finish, Custom grade.

.2 INT 6.3E - Polyurethane varnish G4 finish (over stain), Premium grade.

.3 INT 6.3V - Institutional low odour/low VOC G5 finish, Premium grade.

.6 Plaster and gypsum board: gypsum wallboard, drywall, "sheet rock type material", and textured finishes:

.1 INT 9.2A - Latex finish as noted on drawings (over latex sealer), Premium grade. Gloss level as follows:

.1 G1 - ceilings.

.2 G3 - walls.

.3 G5 - walls in washroom areas.

.2 INT 9.2M 0 Institutional low odour/VOC finish as noted on schedule. Premium grade.

.7 For spray-applied fire-proofing:

.1 Non-flammable paint, such as Dry Fall paint. ULC/UL approved sealer by SFRM manufacturer to be applied prior to painting to prevent paint from penetrating the fireproofing. Refer to Section 07 81 00 - Applied Fireproofing.

.8 All interior metal staircases, guardrails and handrails to be painted.

.9 Exterior staircases, guardrails and handrails to remain as exposed galvanized.

PART 3 EXECUTION

3.01 GENERAL

.1 Compliance: comply with manufacturer's written recommendations or specifications, including product technical bulletins, handling, storage and installation instructions, and data sheet.

.2 Perform preparation and operations for painting in accordance with MPI Manual except where specified otherwise.

3.02 EXAMINATION

.1 Verify that site conditions are acceptable and are ready to receive work.

.2 Examine areas and conditions under which work is to be performed and notify the *Contractor* in writing of conditions detrimental to the proper and timely completion of the work.

.3 Do not proceed with the work until unsatisfactory conditions have been corrected to the satisfaction of the installer.

.4 Take field measurements to verify or supplement dimensions.

.5 Commencement of the installation will be construed as acceptance of the site conditions and, thereafter, the Contractor shall be fully responsible for satisfactory work as specified herein.

.6 Conduct moisture testing of surfaces to be painted using properly calibrated electronic moisture meter, except test concrete floors for moisture using simple "cover patch test". Do not proceed with work until conditions fall within acceptable range as recommended by manufacturer.

3.03 PREPARATION

.1 Protection:

.1 Protect existing building surfaces and adjacent structures from paint spatters, markings and other damage by suitable non-staining covers or masking. If damaged, clean and restore surfaces as directed by the *Contractor* or *Consultant*.

.2 Protect items that are permanently attached such as Fire Labels on doors and frames.

.3 Protect factory finished products and equipment.

.2 Surface Preparation:

.1 Remove electrical cover plates, light fixtures, surface hardware on doors, bath accessories and other surface mounted equipment, fittings and fastenings prior to undertaking painting operations. Identify and store items in secure location and re-installed after painting is completed.

.2 Move and cover furniture and portable equipment as necessary to carry out painting operations. Replace as painting operations progress.

.3 Place "WET PAINT" signs in occupied areas as painting operations progress. Signs to approval of the *Contractor*

.3 Clean and prepare surfaces in accordance with MPI Manual specific requirements and coating manufacturer's recommendations.

.4 Prevent contamination of cleaned surfaces by salts, acids, alkalis, other corrosive chemicals, grease, oil and solvents before prime coat is applied and between applications of remaining coats. Apply primer, paint, or pretreatment as soon as possible after cleaning and before deterioration occurs.

.5 Where possible, prime non-exposed surfaces of new wood surfaces before installation. Use same primers as specified for exposed surfaces.

.1 Apply vinyl sealer to MPI #36 over knots, pitch, sap and resinous areas.

.2 Apply wood filler to nail holes and cracks.

.3 Tint filler to match stains for stained woodwork.

.6 Sand and dust between coats as required to provide adequate adhesion for next coat and to remove defects visible from a distance up to 1000 mm.

.7 Clean metal surfaces to be painted by removing rust, loose mill scale, welding slag, dirt, oil, grease and other foreign substances in accordance with MPI requirements.

.8 Touch up of shop primers with primer as specified.

.9 Do not apply paint until prepared surfaces have been accepted by the *Contractor* or *Consultant*.

3.04 APPLICATION

.1 Method of application to be as approved by The *Contractor* on behalf of the *Owner* Conform to manufacturer's application instructions unless specified otherwise.

.2 Apply coats of paint continuous film of uniform thickness. Repaint thin spots or bare areas before next coat of paint is applied.

.3 Allow surfaces to dry and properly cure after cleaning and between subsequent coats for minimum time period as recommended by the manufacturer.

.4 Sand and dust between coats to remove visible defects.

.5 Finish surfaces both above and below sight lines as specified for surrounding surfaces, including such surfaces as tops of interior cupboards and cabinets and projecting ledges.

.6 Finish inside of cupboards and cabinets as specified for outside surfaces.

.7 Finish closets and alcoves as specified for adjoining rooms.

.8 Finish top, bottom, edges and cutouts of doors after fitting as specified for door surfaces.

3.05 MECHANICAL/ELECTRICAL EQUIPMENT

.1 Paint conduits, piping, hangers, ductwork and other mechanical and electrical equipment exposed in finished areas, to match adjacent surfaces, except as indicated.

.2 Do not paint over nameplates.

.3 Keep sprinkler heads free of paint.

.4 Paint fire protection piping red.

.5 Paint disconnect switches for fire alarm system and exit light systems in red enamel.

.6 Paint natural gas piping yellow on roof. Vertical exterior gas piping to be painted to match adjacent finishes.

.7 Paint with fire retardant paint,both sides and edges of backboards for telephone and electrical equipment before installation. Leave equipment in original finish except for touch-up as required, and paint conduits, mounting accessories and other unfinished items.

3.06 MISCELLANEOUS

.1 Paint and interior and exterior metal doors and frames, primed and 2 coats painted.

.2 All interior drywall primed and 2 coats painted.

.3 NOTE: perimeter drywall within lockers to be two coats primed to 8 feet only.

.4 Exposed concrete block at elevator shafts to be primed and epoxy painted.

.5 Painter responsible to review complete drawings sets for additional requirements for complete project.

END OF SECTION 09 91 00

SECTION 10 28 00
TOILET, BATH, AND JANITOR ACCESSORIES

PART 1 GENERAL

1.01 RELATED DOCUMENTS

.1 Drawings and general provisions of the Contract, including General and Supplementary Conditions and Division 01 Specification Sections, apply to this Section.

1.02 SUMMARY OF WORK

.1 Work Included: The work of this Section includes the provision of all labour, materials, equipment and services required to supply and install toilet accessories, as indicated on the drawings, as specified herein and as required for a complete project.

.2 Section Includes:

- .1 Commercial toilet accessories.
- .2 Commercial shower and bath accessories.
- .3 Under-lavatory pipe supply covers.
- .4 Electric hand/hair dryers.
- .5 Diaper changing stations.
- .6 Utility room accessories.

1.03 RELATED REQUIREMENTS

.1 Section 04 20 00 - Unit Masonry
.2 Section 06 10 00 - Rough Carpentry
.3 Section 09 21 16 - Gypsum Board Assemblies .
.4 Section 09 22 16 - Non-Structural Metal Stud Framing
.5 Section 09 30 13 - Ceramic Tiling.
.6 Mechanical requirements: Division 20, 21 22 and 23, Mechanical
.7 Electrical requirements: Division 26, Electrical

1.04 REFERENCE STANDARDS

.1 ASTM A123/A123M - Standard Specification for Zinc (Hot-Dip Galvanized) Coatings on Iron and Steel Products 2017.
.2 ASTM A269/A269M - Standard Specification for Seamless and Welded Austenitic Stainless Steel Tubing for General Service 2015a (Reapproved 2019).
.3 ASTM A653/A653M - Standard Specification for Steel Sheet, Zinc-Coated (Galvanized) or Zinc-Iron Alloy-Coated (Galvannealed) by the Hot-Dip Process 2020.
.4 ASTM A666 - Standard Specification for Annealed or Cold-Worked Austenitic Stainless Steel Sheet, Strip, Plate, and Flat Bar 2015.
.5 ASTM B86 - Standard Specification for Zinc and Zinc-Aluminum (ZA) Alloy Foundry and Die Castings 2018, with Editorial Revision (2021).
.6 ASTM B456 - Standard Specification for Electrodeposited Coatings of Copper Plus Nickel Plus Chromium and Nickel Plus Chromium 2017.
.7 ASTM C1503 - Standard Specification for Silvered Flat Glass Mirror 2018.

.8 ASTM C1822 - Standard Specification for Insulating Covers on Accessible Lavatory Piping 2021.

.9 ASTM F2285 - Standard Consumer Safety Performance Specification for Diaper Changing Tables for Commercial Use 2004, with Editorial Revision (2016).

.10 ASTM G21 - Standard Practice for Determining Resistance of Synthetic Polymeric Materials to Fungi 2015, with Editorial Revision (2021).

.11 CAN/CGSB 12.5 - Mirrors, Silvered 1986.

.12 CAN/ULC S102 - Method of Testing for Surface Burning Characteristics of Building Materials and Assemblies 2018.

.13 CSA B651 - Accessible Design for the Built Environment 2018.

.14 NFPA 701 - Standard Methods of Fire Tests for Flame Propagation of Textiles and Films 2019.

.15 CAN/CGSB 1.81 M90, Air Drying and Baking Alkyd Primer for Vehicles and Equipment.

.16 CAN/CGSB 1.88 92, Gloss Alkyd Enamel, Air Drying and Baking.

.17 CGSB 31 GP 107Ma 90, Non inhibited Phosphoric Acid Base Metal Conditioner and Rust Remover.

1.05 REGULATORY REQUIREMENTS

.1 The work of this Section, including fabrication, location and installation of barrier free items shall conform to the applicable requirements of CAN/CSA B651, the Building Code of the Province of the Project and all other applicable codes and regulations, to the satisfaction of the authorities having jurisdiction.

1.06 ADMINISTRATIVE REQUIREMENTS

.1 Coordinate the work with the placement of internal wall reinforcement, concealed ceiling supports, and reinforcement of toilet partitions to receive anchor attachments.

1.07 SUBMITTALS

.1 See Division 01, General and Supplementary conditions of the Contract for submittal procedures.

.2 Shop drawings

.1 Submit shop drawings or catalogue illustrations of each product.

.2 Clearly indicate size and description of components, base material, surface finish inside and out, hardware and locks, attachment devices, details of anchors for grab bars.

.3 Where proposed product is by a different manufacturer than the specified product, do not order until acceptance by the *Owner* and *Consultant*.

.3 Product Data: Submit data on accessories describing size, finish, details of function, and attachment methods.

.4 For items that require electrical connectivity, installation shall be designed by an electrical engineer permanently licensed to practice in the province of of the location of the project and who is experienced in providing engineering services of the kind indicated. Each shop drawing submitted shall bear the stamp and

signature of the aforesaid electrical engineer.

.5 For items that require mechanical connectivity installation shall be designed by an mechanical engineer permanently licensed to practice in the province of of the location of the project and who is experienced in providing engineering services of the kind indicated. Each shop drawing submitted shall bear the stamp and signature of the aforesaid mechanical engineer.

.6 Post-installation certification: After installation, provide written certification, signed by the applicable Engineer responsible for the shop drawings, that all applicable items have been installed in accordance with the shop drawings.

.7 Manufacturer's Installation Instructions: Indicate special procedures and conditions requiring special attention.

.8 Warranty: Submit manufacturer warranty completed in the Owner's name and registered with the manufacturer.

1.08 WASTE MANAGEMENT AND DISPOSAL

.1 Cooperate with the Waste Management Coordinator in the implementation of the Waste Management Plan specified in Division 01, General and Supplementary conditions of the Contract. Handle and dispose of waste materials generated by the work of this Section in accordance with the Waste Management Plan.

1.09 WARRANTY

.1 Warrant work of this Section for period of five (5) years against defects and/or deficiencies in accordance with General Conditions of the Contract. Promptly correct any defects or deficiencies which become apparent within period, to satisfaction of the *Owner* and *Consultant* and at no expense to Owner. Defects include but are not limited to; deterioration of mirror’s silvering.

PART 2 PRODUCTS

2.01 MANUFACTURERS

.1 This specification is based on toilet and bath accessories by Bobrick Ltd.

.2 Subject to compliance with specification requirements, equivalent products by the following manufacturers are acceptable alternatives:

.1 Frost

.2 ASI

.3 Requests for substitutions will be considered in accordance with provisions of Division 01, General and Supplementary conditions of the Contract. Acceptance of alternative products is subject to the approval of the *Owner* and *Consultant*.

2.02 FINISHES

.1 Chrome and nickel plating: to ASTM B456 satin finish.

.2 Stainless steel: AISI No.4 satin lustre finish.

.3 Manufacturer's or brand names on face of units not acceptable.

2.03 MATERIALS

.1 Accessories - General: Shop assembled, free of dents and scratches and packaged complete with anchors and fittings, steel anchor plates, adapters, and

anchor components for installation.

.2 Keys: Provide 4 keys for each accessory to Owner; master key lockable accessories.

.3 Stainless Steel Sheet: ASTM A666, Type 304.

.1 Concealed Sheet Steel reinforcing Stainless steel sheet metal: to ASTM A666 Type 304, satin finish, minimum 0.8 mm thick.

.4 Reinforcing sheet steel: commercial grade, stretcher levelled sheet steel ASTM A653/A653M with Z275 designation zinc coating.

.5 Stainless Steel Tubing: ASTM A269/A269M, Grade TP304 or TP316.

.1 Stainless steel tubing: AISI Type 304, commercial grade, seamless welded, 1.25 mm wall thickness.

.6 Galvanized Sheet Steel: Hot-dipped galvanized steel sheet, ASTM A653/A653M, with G60/Z180 coating.

.7 Mirror Glass: In accordance with CAN/CGSB 12.5; Type 1B for high humidity use, 6 mm nominal thickness, with silvering, electroplated copper coating, and protective organic coating.

.8 Fasteners, Screws, and Bolts: Hot dip galvanized; tamper-proof.

.1 Exposed fasteners to match face of unit. Expansion shields, fibre, lead or rubber as recommended by accessory manufacturer for component and its intended use.

.9 Expansion Shields: Fibre, lead, or rubber as recommended by accessory manufacturer for component and substrate.

.10 18” HD wall shelf Frost (Item #950-4) No4 Brushed stainless steel, maximum 100 mm projection from the wall.

2.04 FINISHES

.1 Stainless Steel: Satin finish.

.1 Stainless steel: AISI No.4 satin lustre finish

.2 Chrome/Nickel Plating: ASTM B456, SC 2, polished finish.

.3 Galvanizing for Items Other than Sheet: Comply with ASTM A123/A123M; galvanize ferrous metal and fastening devices.

.4 Manufacturer's or brand names on face of units not acceptable.

2.05 COMMERCIAL TOILET ACCESSORIES

.1 Toilet Paper Dispenser: Single roll, surface mounted bracket type, stainless steel.

.1 Cascades 4212 (DB12) surface mounted double giant roll tissue dispenser with hood. Provide one in each toilet compartment.

.2 Soap Dispenser

.1 Bobrick B-4112, surface mounted.

.3 Mirrors: Stainless steel framed, 6 mm thick [____].

.1 Annealed Float Glass: Silvering, protective and physical characteristics in compliance with ASTM C1503.

.1 Custom Flat Mirror, 30"x39" conforming to ASTM C1503, Type 1. Supply unit in stainless steel angle framing and minimum 0.457 mm thick (26ga), galvanized sheet steel backing.

.4 Grab Bars: Stainless steel, peened surface.
.1 Standard Duty Grab Bars:
.1 Push/Pull Point Load: 1110 N, minimum.
.2 Dimensions: 38 mm outside diameter, exposed flange mounting, 38 mm clearance between wall and inside of grab bar.
.3 Type 1 – Bobrick B-6806.99 Straight Horizontal 610mm (24”); 38mm dia stainless steel bar, 600mm long, concealed fastening.
.4 Type 2 – Bobrick B6898.99 “L” shaped 760mm x 760mm (30” x 30”); 38mm dia stainless steel 90-degree grab bar, concealed fastening.
.5 Sanitary Napkin Disposal Unit: Stainless steel, surface-mounted, self-closing door, locking bottom panel with full-length stainless steel piano-type hinge, removable receptacle.

2.06 COMMERCIAL TOILET ACCESSORIES
.1 Clothes hook
.1 Bobrick B-6717 stainless steel surface mounted single robe hook.
.2 Stainless steel shelf
.1 Frost 950-4x18, to be located not more than 1100mm above the finished floor and projects not more than 100mm from the wall.

2.07 UNDER-LAVATORY PIPE AND SUPPLY COVERS
.1 Under-Lavatory Pipe and Supply Covers:
.1 Insulate exposed drainage piping including hot, cold, and tempered water supplies under lavatories or sinks to comply with CSA B651.

2.08 ELECTRIC HAND/HAIR DRYERS
.1 Dyson #307174-01 Airblade
.1 Finish: Sprayed Nickel
.2 G.C to coordinate electrical requirements with electrical drawings.

2.09 SINK
.1 Refer to Mechanical Specifications.

2.10 CONCEALED TOILET FLUSH VALVE:
.1 Refer to Mechanical Specifications.

2.11 UTILITY ROOM ACCESSORIES
.1 Combination Utility Shelf/Mop and Broom Holder: 1.3 mm thick stainless steel, Type 304, with 12 mm returned edges, 1.6 mm steel wall brackets.
.2 Mop Sink - Refer to mechanical specifications.

PART 3 EXECUTION

3.01 EXAMINATION
.1 Verify existing conditions before starting work.
.2 Verify exact location of accessories for installation.

.3 Verify that appropriate blocking and support for accessories has been installed prior to commencement of work.

.4 For electrically-operated accessories, verify that electrical power connections are ready and in the correct locations.

.5 Verify that site measurements are as indicated on Drawings.

.1 Examine areas and conditions under which work is to be performed and notify the Contractor . in writing of conditions detrimental to the proper and timely completion of the work.

.2 Do not proceed with the work until unsatisfactory conditions have been corrected in a manner satisfactory to the installer.

.3 Commencement of the installation will be construed as acceptance of the site conditions and, thereafter, the applicable *Contractor* shall be fully responsible for satisfactory work as specified herein.

3.02 PREPARATION

.1 Deliver inserts and rough-in frames to site for timely installation.

.2 Provide templates and rough-in measurements as required.

3.03 INSTALLATION

.1 Install accessories in accordance with manufacturers' instructions in locations indicated on Drawings.

.2 Install plumb and level, securely and rigidly anchored to substrate.

.3 Mounting Heights: As required by accessibility regulations, unless otherwise indicated.

.4 Provide necessary wall reinforcement for grab bars and accessories as detailed for 227 kg (500 lbs) downward pull.

.5 Install washroom accessories in accordance with manufacturer's printed installation instructions.

.6 Provide fastenings and mounting kits for washroom accessories.

.7 Verify wall opening for correct dimensions, plumbness of blocking or frames and other preparation that would affect installation of washroom accessories.

.8 Verify spacing of plumbing fixtures and toilet partitions that affect installation of washroom accessories.

.9 Securely fasten accessories, level and plumb using appropriate fastenings as recommended by manufacturer.

.10 Provide corrosion resistant fastenings. Where fasteners are exposed, use fasteners finished to match items being secured.

.11 Locate washroom accessories where indicated on Drawings

.12 Provide manufacturer's recommended anchoring systems.

.1 Fit flanges of accessories snug to wall surfaces.

.13 Comply with requirements of CAN/CSA B651 , applicable Building Codes and accessibility regulations in the Province of the Project regarding location of handicap items.

3.04 CLEANING

.1 Upon completion of the work of this Section installation remove from the premises all surplus material, dirt and debris caused by the work of this Section and leave the installation clean and ready for the intended use by the Owner.

.2 Make good any damage caused by the work of this Section.

3.05 PROTECTION

.1 Protect installed accessories from damage due to subsequent construction operations.

END OF SECTION 10 28 00

This page intentionally left blank

SECTION 10 28 10.01
RESTROOM EMERGENCY CALL SYSTEM *

PART 1 GENERAL

1.01 RELATED DOCUMENTS

.1 *Drawings* and general provisions of the *Contract*, including General and Supplementary Conditions and Division 1 Specification Sections, apply to this Section.

.2 Coordinate with electrical drawings for power supply.

1.02 SECTION INCLUDES

.1 Work Included: The work of this Section includes the provision of all labour, materials, equipment and services required to provide restroom restroom emergency call systems, as indicated on the drawings, as specified herein and as required for the proper completion of the work of all trades, as required for a complete project.

.2 Automatic door controls for restrooms.

.3 Emergency call systems for universal and barrier free restrooms.

.4 Automatic door relay controls.

.5 Automatic door activation.

.6 Automatic door wireless activation.

1.03 RELATED SECTIONS

.1 Section 08 11 13 - Hollow Metal Doors and Frames

.2 Section 08 71 10 - Door Hardware

.3 Section 10 28 10.02 - Restroom Barrier Free Door Control *

.4 Section 10 28 10.03 - Appendix A - Restroom Control Kit * (6 pages attached)

.2 Electrical Drawings.

.1 Electrical: Emergency power scheduled for automatic restroom egress doors to comply with building code requirements.

1.04 REFERENCE STANDARDS

.1 ANSI/ICC A117.1-2009 - Accessible and Usable Buildings and Facilities.

.2 ANSI/BHMA A156.19 - Standard for Power Assist and Low Energy Power Operated Doors.

1.05 SUBMITTALS

.1 Submit under provisions specified in Division 01, General and Supplementary conditions of the *Contract.*

.2 Product Data: Manufacturer's data sheets on each product to be used, including:

.1 Preparation instructions and recommendations.

.2 Storage and handling requirements and recommendations.

.3 Installation methods.

.3 *Shop Drawings*: Electrical schematic, device mounting requirements and rough-in for recessed devices.

.4 Verification Samples: For each finish product specified, two samples, minimum size 6 inches (150 mm) square representing actual product, color, and patterns.

.5 The Restroom Emergency Call System installation shall be designed by an Electrical Engineer permanently licensed to practice in the province of the location of the project and who is experienced in providing engineering services of the kind indicated. Each shop drawing submitted shall bear the stamp and signature of the aforesaid electrical engineer.

.6 Post-installation certification: After installation, provide written certification, signed by the Engineer responsible for the shop drawings, that all applicable items have been installed in accordance with the shop drawings.

.7 Manufacturer's Qualification Statement

.8 Installer's Qualification Statement

1.06 MOCK-UP

.1 Provide a mock-up for evaluation of surface preparation techniques and application workmanship.

1.07 QUALITY ASSURANCE

.1 Manufacturer Qualifications: Minimum five (5) year experience manufacturing similar products.

.2 Installer Qualifications: Minimum two (2) year experience installing similar products.

1.08 PRE-INSTALLATION MEETINGS

.1 Convene minimum two weeks prior to starting work of this section.

1.09 DELIVERY, STORAGE, AND HANDLING

.1 Deliver and store products in manufacturer's unopened packaging bearing the brand name and manufacturer's identification until ready for installation.

.2 Handling: Handle materials to avoid damage.

1.10 PROJECT CONDITIONS

.1 Maintain environmental conditions (temperature, humidity, and ventilation) within limits recommended by manufacturer for optimum results. Do not install products under environmental conditions outside manufacturer's recommended limits.

1.11 SEQUENCING

.1 Ensure that products of this section are supplied to affected trades in time to prevent interruption of construction progress.

1.12 WARRANTY

.1 Manufacturer's Warranty: Provide manufacturer's warranty for defective parts for a three (3) year period from date of Ready-For-Takeover

PART 2 PRODUCTS

2.01 MANUFACTURERS

.1 Acceptable Manufacturer: Camden Door Controls, RHINOTEK

.2 Requests for substitutions will be considered in accordance with provisions specified in Division 01, General and Supplementary conditions of the *Contract.*

2.02 PERFORMANCE:

.1 Emergency Call System shall comply with the latest requirements of the building code of the province of the work, latest edition.

.1 Emergency Call System shall be designed to provide a washroom occupant with the ability to request emergency assistance, to receive visual and audible confirmation that their request has been made, and visual and audible notification to building staff and occupants outside the restroom of an emergency condition.

.2 Product: Emergency Call Systems For Universal & Barrier Free Restrooms - CX-WEC10 System as manufactured by Camden Door Controls.

.2 Operation: The ' Press For Emergency Assistance' mushroom push button is activated by the occupant. This energizes the LED annunciator and sounder within the washroom, and the dome light with sounder outside the washroom. Both annunciators will be energized until the latching mushroom push button switch is pulled out.

.3 Components:

.1 CM-450R/12 ‘Press for Emergency Assistance’ switch, ‘Push/Pull’ operation with heavy gauge stainless steel faceplate, 1-5/8” (41.27mm) vandal resistant red button, N/O and N/C contacts, rated 10 Amp @ 30VDC and permanently laser etched graphics (black)

.2 CM-AF501SO: Single gang LED annunciator with adjustable sounder, rated 85dB at 4 inches (102 mm), weather and vandal resistant construction, brushed stainless steel faceplate, with ' ASSISTANCE REQUESTED'. ‘White Out’ text shall not be legible unless the annunciator is energized.

.3 CM-AF141SO: Single gang LED dome light with adjustable piezo sounder, rated 93dB at 3 feet (1 meter), weather (indoor/outdoor) and vandal resistant construction, white. 180 degree visibility with ‘ASSISTANCE REQUIRED' text printed on two sides of lens.

.4 CM-SE21A: sign, to be located above the activation switch, 1/16 inch (1.6 mm), 6 inches H x 10-5/8 inches W, (152 mm x 270 mm), fire rated expanded PVC white with, 1 inch (25 mm) red lettering. Text shall be; ' IN THE EVENT OF AN EMERGENCY PUSH EMERGENCY BUTTON AND AUDIBLE AND VISUAL SIGNAL WILL ACTIVATE'.

PART 3 EXECUTION

3.01 EXAMINATION

.1 Do not begin installation until substrates have been properly prepared.

.2 Verify that site conditions are acceptable and are ready to receive work.

.3 Examine areas and conditions under which work is to be performed and notify the *Contractor* in writing of conditions detrimental to the proper and timely completion of the work.

.4 Do not proceed with the work until unsatisfactory conditions have been corrected to the satisfaction of the installer.

.5 Take field measurements to verify or supplement dimensions.

.6 Commencement of the installation will be construed as acceptance of the site conditions and, thereafter, the *Contractor* shall be fully responsible for satisfactory work as specified herein.

3.02 PREPARATION

.1 Clean surfaces thoroughly prior to installation.

.2 Prepare surfaces using the methods recommended by the manufacturer for achieving the best result for the substrate under the project conditions.

3.03 INSTALLATION

.1 Install in accordance with manufacturer's instructions. Test for proper operation and adjust until satisfactory results are obtained.

3.04 DEMONSTRATION AND TRAINING

.1 Manufacturer's representative shall provide on-site training of staff and maintenance of operation, maintenance and "trouble/error" detection/correction.

3.05 PROTECTION

.1 Protect installed products until completion of project.

.2 Touch-up, repair or replace damaged products before *Ready-For-Takeover.*

END OF SECTION 10 28 10.01

SECTION 10 28 10.02
RESTROOM BARRIER FREE DOOR CONTROL *

GENERAL

1.01 RELATED DOCUMENTS

.1 Drawings and general provisions of the Contract, including General and Supplementary Conditions and Division 1 Specification Sections, apply to this Section.

.2 Coordinate with electrical drawings for power supply.

1.02 SECTION INCLUDES

.1 Work Included: The work of this Section includes the provision of all labour, materials, equipment and services required to provide restroom barrier free door controls, as indicated on the drawings, as specified herein and as required for the proper completion of the work of all trades, as required for a complete project.

.2 Automatic door controls for restrooms.

.3 Emergency call systems for universal and barrier free restrooms.

.4 Automatic door relay controls.

.5 Automatic door activation.

.6 Automatic door wireless activation.

1.03 RELATED SECTIONS

.1 Section 08 11 13 - Hollow Metal Doors and Frames

.2 Section 08 71 10 - Door Hardware

.3 Section 10 28 10.03 - Appendix A - Restroom Control Kit * (6 pages attached)

.2 Electrical Drawings.

.3 Division 26 - Electrical: Emergency power scheduled for automatic restroom egress doors to comply with building code requirements.

1.04 REFERENCE STANDARDS

.1 ANSI/ICC A117.1-2009 - Accessible and Usable Buildings and Facilities.

.2 ANSI/BHMA A156.19 - Standard for Power Assist and Low Energy Power Operated Doors.

1.05 SUBMITTALS

.1 Submit under provisions of Section 01 30 00 - Administrative Requirements

.2 Product Data: Manufacturer's data sheets on each product to be used, including:

.1 Preparation instructions and recommendations.

.2 Storage and handling requirements and recommendations.

.3 Installation methods.

.3 Shop Drawings: Electrical schematic, device mounting requirements and rough-in for recessed devices.

.4 Verification Samples: For each finish product specified, two samples, minimum size 6 inches (150 mm) square representing actual product, color, and patterns.

.5 The Restroom Barrier Free Door Control installation shall be designed by an Electrical Engineer permanently licensed to practice in the province of of the location of the project and who is experienced in providing engineering services of the kind indicated. Each shop drawing submitted shall bear the stamp and signature of the aforesaid electrical engineer.

.6 Post-installation certification: After installation, provide written certification, signed by the Engineer responsible for the shop drawings, that all applicable items have been installed in accordance with the shop drawings.

.7 Manufacturer's Qualification Statement

.8 Installer's Qualification Statement

1.06 QUALITY ASSURANCE

.1 Manufacturer Qualifications: Minimum five (5) year experience manufacturing similar products.

.2 Installer Qualifications: Minimum two (2) year experience installing similar products.

.3 Mock-Up: Provide a mock-up for evaluation of surface preparation techniques and application workmanship.

.1 Finish areas designated by the *Consultant*.

.2 Do not proceed with remaining work until workmanship is approved by the *Consultant*.

.3 Rework mock-up area as required to produce acceptable work.

1.07 PRE-INSTALLATION MEETINGS

.1 Convene minimum two weeks prior to starting work of this section.

1.08 DELIVERY, STORAGE, AND HANDLING

.1 Deliver and store products in manufacturer's unopened packaging bearing the brand name and manufacturer's identification until ready for installation.

.2 Handling: Handle materials to avoid damage.

1.09 PROJECT CONDITIONS

.1 Maintain environmental conditions (temperature, humidity, and ventilation) within limits recommended by manufacturer for optimum results. Do not install products under environmental conditions outside manufacturer's recommended limits.

1.10 SEQUENCING

.1 Ensure that products of this section are supplied to affected trades in time to prevent interruption of construction progress.

1.11 WARRANTY

.1 Manufacturer's Warranty: Provide manufacturer's warranty for defective parts for a three (3) year period from date of Ready-For-Takeover.

PART 2 PRODUCTS

2.01 MANUFACTURER

.1 Acceptable Manufacturer: Camden Door Controls - See attached Section 10 28 10.03 - Appendix A - Restroom Control Kit * (6 pages attached) for standards of acceptance.
  .1 For type refer to drawings and coordinate with electrical.
.2 Requests for substitutions will be considered in accordance with provisions of Division 01, General and Supplementary conditions of the Contract. Acceptance of alternative products is subject to the approval of the Consultant.

2.02 AUTOMATIC DOOR CONTROLS FOR RESTROOMS

.1 Performance:
  .1 Automatic door controls shall comply with Ontario Building Code, latest edition.
  .2 Automatic door controls shall comply with NFPA National Fire Code or International Fire Code for restroom doors acting as egress doors as required by Authority Having Jurisdiction (AHJ).
.2 Product: Basic Push Button Restroom Control System - CX-WC10 as manufactured by Camden Door Controls.
  .1 Operation:
    .1 The door is normally closed and locked or unlocked. Pressing the exterior push plate switch opens the door. Once inside and the door is closed, pressing the ' Push to Lock' mushroom push button locks the door. The electric strike is energized and the exterior push plate switch is deactivated. Press the interior push plate switch to exit the restroom and reset the system. If the door is opened manually to exit the restroom, the door magnetic contact switch resets the system.
    .2 Status: Normally locked. Fail secure electric strike.
    .3 Status: Normally unlocked. Fail safe electric strike.
.3 Components:
  .1 The following items are part of the CX-WC10 equipment package:
    .1 CX-33 Advanced Logic Control Relay with 14 modes of operation, secured and unsecured restroom control modes, (3) 3 form ‘C’ relay outputs rated 3 Amp. @ 30VDC and surge protection.
    .2 CM 400/8 ‘Push to Lock’ Mushroom Push Button with heavy duty brushed stainless steel faceplate, 1 5/8” (40mm) vandal resistant red button and N/O contacts rated 10 Amps @ 30VDC
    .3 CX MDA surface mount SPST N/C door contacts.
  .2 The following items are required, but not included in CX-WC10 equipment package:
    .1 Door Operator (by others),
      .1 CX-ED2079 Electric Strike, grade 2 ‘universal’ strike for cylindrical locksets c/w 3 faceplates, 12/24V AC/DC, selectable fail safe/fail secure. The strike shall have horizontal faceplate adjustment.
      .2 CM-60/4 6” (165.1mm) Activation (wall) switches (2 required), stainless steel construction, N/O contacts rated 15 Amps @ 30VDC and paint filled debossed ‘wheelchair

symbol & ‘Push To Open’ graphics (blue)

.3 CX-TRX-2450 12/24V UL listed 40VA transformer and AC/DC rectifier.

PART 3 EXECUTION

3.01 EXAMINATION

.1 Do not begin installation until substrates have been properly prepared.

.2 Verify that site conditions are acceptable and are ready to receive work.

.3 Examine areas and conditions under which work is to be performed and notify the *Contractor* in writing of conditions detrimental to the proper and timely completion of the work.

.4 Do not proceed with the work until unsatisfactory conditions have been corrected to the satisfaction of the installer.

.5 Take field measurements to verify or supplement dimensions.

.6 Commencement of the installation will be construed as acceptance of the site conditions and, thereafter, the Contractor shall be fully responsible for satisfactory work as specified herein.

3.02 PREPARATION

.1 Clean surfaces thoroughly prior to installation.

.2 Prepare surfaces using the methods recommended by the manufacturer for achieving the best result for the substrate under the project conditions.

3.03 INSTALLATION

.1 Install in accordance with manufacturer's instructions. Test for proper operation and adjust until satisfactory results are obtained.

3.04 DEMONSTRATION AND TRAINING

.1 Manufacturer's representative shall provide on-site training of staff and maintenance of operation, maintenance and "trouble/error" detection/correction.

3.05 PROTECTION

.1 Protect installed products until completion of project.

.2 Touch-up, repair or replace damaged products before *Ready-For-Takeover.*

END OF SECTION 10 28 10.02

SECTION 10 28 10.03
APPENDIX A - RESTROOM CONTROL KIT * (6 PAGES ATTACHED)

SEE ATTACHED
RESTROOM CONTROL KIT
Camden Door Controls

Coordinate with electrical drawings for responsibility of supply.

END OF SECTION 10 28 10.03

Industry-Leading Packages for Automatic Doors in Restroom Applications

- 'Best in Class' product quality and value
- The widest range of design options:
  - One-door systems
  - Two-door (shared use) system
  - 'Assistance Required' (healthcare) system
- Featuring new Camden products specifically designed for restroom control
- Everything you need in one package, including controller, activation switches, signage and door contacts
- Special package pricing

Camden DOOR CONTROLS

DISCOVER THE BEST IN DOOR ACTIVATING AND LOCKING PRODUCTS!

TOLL FREE: 1.877.226.3369 · Tel: 905.366.3377 · Fax: 905.366.3378
info@camdencontrols.com · www.camdencontrols.com

CX-WC: RESTROOM CONTROL KITS

CAMDEN DOOR CONTROLS offers an industry-leading range of packages designed specifically for the control of automatic doors in restroom applications. These kits feature a number of innovative and exclusive products, including the CM-AF500 single gang annunciator (providing 'Occupied When Lit' signage that is not legible when unit is not lit) CX-33 advanced logic relay (providing exclusive operation modes for restroom control) and Aura™ illuminated push plate switches (that combine 'Occupied When Lit' annunciation and door activation in one product).

	MODELS	APPLICATION	INCLUDED
	CX-WC10	BASIC PUSH BUTTON SYSTEM	• CX-33 Advanced Logic Control • CM-400/8 Mushroom (PUSH TO LOCK) Button • CX-MDC Magnetic Door Contact
	CX-WC11	PUSH BUTTON AND ANNUNCIATOR SYSTEM	• CX-33 Advanced Logic Control • CM-400/8 Mushroom (PUSH TO LOCK) Button • CM-AF500 Single Gang LED Annunciator • CX-MDC Magnetic Door Contact
	CX-WC12	4 ½" PUSH PLATE AND ANNUNCIATOR SYSTEM	• CX-33 Advanced Logic Control • CM-40/8 All Active™ Push Plate Switch (PUSH TO LOCK) Button • CM-AF500 Single Gang LED Annunciator • CX-MDC Magnetic Door Contact
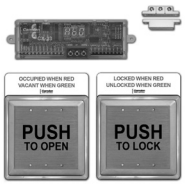	**CX-WC13**	AURA™ ILLUMINATED PUSH PLATE SWITCH SYSTEM	• CX-33 Advanced Logic Control • CM-45/8GRSE1 4 ½" Illuminated Push Plate Switch (PUSH TO LOCK), with sign • CM-45/3GRSE1 4 ½" Illuminated Push Plate Switch (PUSH TO OPEN), with sign • CX-MDC Magnetic Door Contact
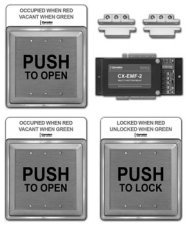	**CX-WC14**	TWO DOOR RESTROOM SYSTEM	• CX-EMF-2 Multi-Function Relay • CM-45/8GRSE1 4 ½" Illuminated Push Plate Switch (PUSH TO LOCK), with sign • (2) CM-45/3GRSE1 4 ½" Illuminated Push Plate Switch (PUSH TO OPEN), with sign • (2) CX-MDC Magnetic Door Contact
	CX-WC15	'ASSISTANCE REQUIRED' RESTROOM SYSTEM	• CX-EMF-2 Multi-Function Relay • CM-45/8 GRSE1 4 ½" Illuminated Push Plate Switch (PUSH TO LOCK), with sign • CM-45/3GRSE1 4 ½" Illuminated Push Plate Switch (PUSH TO OPEN), with sign • CM-450R/12 Mushroom Push Button (PRESS FOR EMERGENCY ASSISTANCE) • CX-MDC Magnetic Door Contact

Mississauga, ON Canada • Toll Free: 1.877.226.3369 (CAMDEN 9) • Tel: 905.366.3377
Fax: 905.366.3378 • E-mail: info@camdencontrols.com • www.camdencontrols.com

CX-WEC SERIES

EMERGENCY CALL SYSTEM FOR UNIVERSAL & BARRIER FREE RESTROOMS

CX-WEC10 KIT

FEATURES

- A COMPLETE EQUIPMENT PACKAGE SPECIFICALLY DESIGNED TO MEET THE REQUIREMENTS OF ONTARIO REG. 368/13 AMENDMENT TO 2012 OBC FOR BARRIER FREE & UNIVERSAL RESTROOMS.
- DESIGNED FOR UNIVERSAL RESTROOMS WITH OR WITHOUT LOW ENERGY DOOR OPERATORS.
- FOR USE WITH CAMDEN CX-WC SERIES BARRIER FREE RESTROOM CONTROL KITS.
- AUDIBLE AND VISUAL ANNUNCIATION WITHIN RESTROOM DESIGNED TO CONFIRM A REQUEST FOR ASSISTANCE WITHOUT DISTURBING OCCUPANT. ANNUNCIATION IS ACTIVATED UNTIL MUSHROOM BUTTON IS PULLED 'OFF'.
- AUDIBLE AND VISUAL ANNUNCIATION OUTSIDE RESTROOM OF AN EMERGENCY CONDITION
- 3 YEAR WARRANTY

DESCRIPTION

Camden Door Control CX-WEC Series is an equipment package designed to meet the latest building code requirements for universal restrooms. The kit includes a CM-450R/12 maintained push/pull mushroom button, that activates/ deactivates a call for emergency assistance. Audible and visual annunciation of the request is provided inside the restroom by the CM-AF501SO single gang LED annunciator with sounder, and outside the restroom by the CM-AF140SO single gang dome light with sounder. The equipment package also includes a CM-SE21 'IN THE EVENT OF AN EMERGENCY' sign, with 1" (25mm) lettering, as required by code.

APPLICATION

Camden Door Controls CX-WEC Series emergency call systems provide a complete equipment package for compliance with building code requirements. They are designed for universal restrooms with or without low energy door operators. The kit includes activation switch, audible and visual annunciation and signage.

ARCHITECTS/ENGINEERS SPECIFICATION

Universal restroom 'EMERGENCY ASSISTANCE' signal activation, annunciation and supporting signage shall be Camden Door Controls model CX-WEC10/CX-WEC11 universal restroom control kit.

The kit shall include:
CM-450R/12 single gang mushroom push button, brushed steinless steel faceplate and red button, maintained push/pull operation with 'PRESS FOR EMERGENCY ASSISTANCE' permanently laser etched on the faceplate.

CM-AF501SO single gang LED annunciator with sounder, rated 85dB at 10cm, weather and vandal resistant construction, brushed stainless steel faceplate, with 'ASSISTANCE REQUESTED' message text, that is not legible unless the annunciator is energized.

CM-AF140SO single gang dome light with piezo sounder, rated 93dB at 1 meter, brushed stainless steel faceplate and 24V incandescent bulb. Text shall be; 'ASSISTANCE REQUIRED'.

CM-SE21 sign, to be located above the activation switch, 1/16" (1.6mm), 15" x 15", (381mm x 381mm), fire rated expanded PVC white with, 25mm black lettering. Text shall be; 'IN THE EVENT OF AN EMERGENCY PUSH EMERGENCY BUTTON AND AUDIBLE AND VISUAL SIGNAL WILL ACTIVATE'.

CM-450R/12

1 5/8" MUSHROOM PUSH BUTTON, PUSH/PULL, 'PRESS FOR EMERGENCY ASSISTANCE'

- PUSH/PULL MAINTAINED OPERATION
- SINGLE GANG STAINLESS STEEL FACEPLATE
- IMPACT RESISTANT BUTTON AND METAL COLLAR
- TEXT IS PERMANENTLY LASER ETCHED ON FACEPLATE
- HEAVY DUTY 10 AMP CONTACTS, N/O & N/C

CM-450R/12

CM-AF140SO

SINGLE GANG DOME LIGHT, WITH SOUNDER, 'ASSISTANCE REQUIRED'

- 180° VISIBILITY WHEN ILLUMINATED
- LOUD 93 DB PIEZO SOUND ALERT
- NO TOOLS REQUIRED TO CHANGE INCANDESCENT BULB
- SINGLE GANG HEAVY DUTY BRUSHED STAINLESS STEEL FACEPLATE

CM-AF140SO

CM-AF501SO

SINGLE GANG ANNUNCIATOR, WITH SOUNDER, 'ASSISTANCE REQUESTED'

- 'ASSISTANCE REQUESTED' MESSAGE ONLY LEGIBLE UPON ACTIVATION
- SUPER BRIGHT LED ILLUMINATION
- SINGLE GANG HEAVY DUTY BRUSHED STAINLESS STEEL FACEPLATE
- 85 DB PIEZO SOUND ALERT IS DESIGNED TO CONFIRM REQUEST WITHOUT DISTURBING OCCUPANT IN SMALL ENCLOSED SPACE

CM-AF501SO

CM-SE21

SIGNAGE FOR UNIVERSAL RESTROOMS

- COMPLIES WITH ONTARIO BUILDING CODE REQUIREMENTS
- WHITE, 1/16" (1.6mm) THICK PANEL, 15" X 15", (381mm X 381mm)
- FIRE RATED EXPANDED PVC
- BLACK 1" (25mm) LETTERING
- EASILY MOUNTED TO WALL (GLUE OR SCREWS)

CM-SE21

SPECIFICATION

CM-450R/12

MUSHROOM PUSH BUTTON, PUSH/PULL, 'PRESS FOR EMERGENCY ASSISTANCE'

VOLTAGE:	12/24V AC/DC
CONTACT TYPE:	DPST
CONTACT RATING:	10 AMPS
TEMP RANGE:	-13°F TO 158°F (-25°C TO 75°C)
SWITCH LIFE:	100,000 CYCLES
DIMENSIONS:	4 1/2"H x 2 3/4"W x 1 3/4"D (114mm x 70mm x 44mm)
STD. FINISH:	STAINLESS STEEL

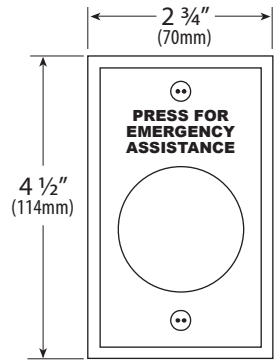

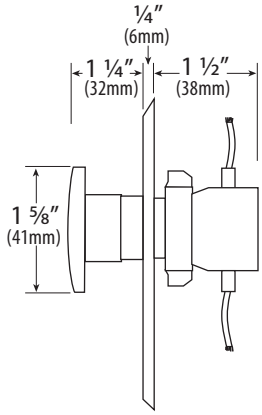

CM-450R/12

CM-AF140SO

SINGLE GANG DOME LIGHT, WITH SOUNDER, 'ASSISTANCE REQUIRED'

VOLTAGE:	24 VDC
ILLUMINATION:	INCANDESCENT BULB
SOUNDER:	PIEZO, 93 DB MAX. AT 39.4" (1,000mm)
CURRENT RATING:	PIEZO, 20mA MAX.
TEMP RANG:	32°F - 176°F (0°C - 80°C)
DIMENSIONS:	4 1/2"H x 2 3/4"W x 1"D (114mm x 70mm x 25mm)
STD. FINISH:	STAINLESS STEEL

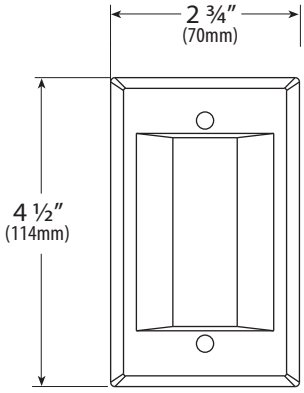

CM-AF501SO

SINGLE GANG ANNUNCIATOR, WITH SOUNDER, 'ASSISTANCE REQUESTED'
(MESSAGE ONLY APPEARS UPON ACTIVATION)

VOLTAGE:	24 VDC
ILLUMINATION:	SUPER BRIGHT LEDS
SOUNDER:	PIEZO, 85 DB AT 4" (101mm)
CURRENT DRAW:	75mA, MAX.
TEMP RANG:	32°F - 176°F (0°C - 80°C)
DIMENSIONS:	4 1/2"H x 2 3/4"W x 9/16"D (114mm x 70mm x 15mm)
STD. FINISH:	STAINLESS STEEL

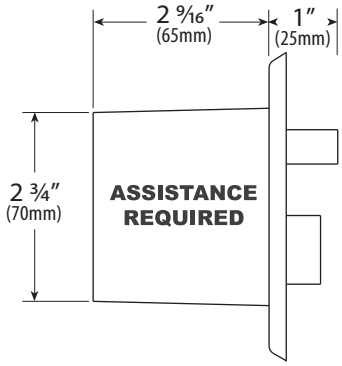

CM-AF140SO

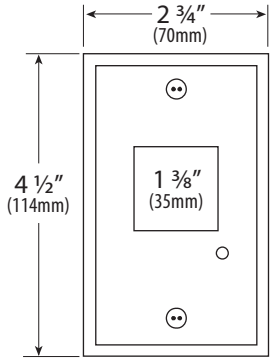

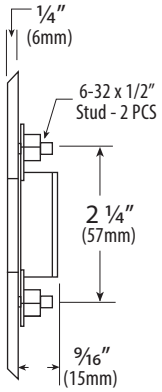

CM-AF501SO

ORDERING INFORMATION

EQUIPMENT PACKAGE

CX-WEC10	INCLUDES: CM-450R/12 'PUSH FOR EMERGENCY ASSISTANCE' MUSHROOM PUSH BUTTON, CM-AF501SO LED ANNUNCIATOR & SOUNDER, CM-AF140SO DOME LIGHT & SOUNDER AND CM- SE21 WHITE PANEL SIGN. UNIVERSAL RESTROOM KIT FOR USE WITHOUT AUTOMATIC DOOR OPERATOR OR WITH CX-WC10,11, 12, 13 & 14 BARRIER FREE RESTROOM CONTROL KITS.
CX-WEC11	AS ABOVE WITHOUT CM-450R/12 PUSH BUTTON. UNIVERSAL RESTROOM KIT FOR USE WITH CX-WC15 BARRIER FREE RESTROOM CONTROL KIT.

COMPONENTS

CM-AF501SO:	SINGLE GANG LED ANNUNCIATOR C/W SOUNDER, 'ASSISTANCE REQUESTED'
CM-AF140SO:	SINGLE GANG DOME LIGHT, WITH SOUNDER, 'ASSISTANCE REQUIRED'
CM-450R/12:	MUSHROOM PUSHBUTTON, STAINLESS STEEL FACEPLATE, PUSH/PULL, 'PRESS FOR EMERGENCY ASSISTANCE'
CM-SE21:	ENGLISH SOLID WHITE SIGN, 15" X 15" (381mm X 381mm) 'IN THE EVENT OF AN EMERGENCY PUSH EMERGENCY BUTTON AND AUDIBLE AND VISUAL SIGNAL WILL ACTIVATE'

OPTIONAL SIGNAGE

CM-SE20A:	ENGLISH, CLEAR VINYL SELF ADHESIVE SIGN, AS ABOVE, 8" X 25" (203mm X 635mm)
CM-SE20B:	ENGLISH, WHITE VINYL SELF ADHESIVE SIGN, AS ABOVE, 8" X 25" (203mm X 635mm)
CM-SF20A:	FRENCH, CLEAR VINYL SELF ADHESIVE SIGN, 8" X 25" (203mm X 635mm) 'DANS LE CAS D'UNE URGENCE POUSSER LE BOUTON D'URGENCE POUR ACTIVER LE SIGNAL SONORE ET VISUEL'
CM-SF20B:	FRENCH, WHITE VINYL SELF ADHESIVE SIGN, 8" X 25" (203mm X 635mm) 'DANS LE CAS D'UNE URGENCE POUSSER LE BOUTON D'URGENCE POUR ACTIVER LE SIGNAL SONORE ET VISUEL'

This page intentionally left blank

SECTION 11 13 00
LOADING DOCK EQUIPMENT *

PART 1 GENERAL

1.01 RELATED DOCUMENTS

.1 Drawings and general provisions of the *Contract,* including General and Supplementary conditions and Division 01 Specification Sections, apply to this Section.

1.02 SUMMARY OF WORK

.1 Work Included:

.1 The work of this Section includes the provision of all labour, materials, equipment and services required to engineer, fabricate and install loading dock equipment, as indicated on the drawings, as specified herein and as required for a complete *Project.*

.2 The work includes

.1 Dock Levelers.
.2 Dock bumpers.
.3 Control Stations.

1.03 RELATED SECTIONS:

.1 Section 05 50 00 - Metal Fabrications: Angle frame for dock levelling pit.
.2 Section 08 36 13 - Sectional Metal Overhead Doors
.3 Section 09 91 00 - Painting *
.4 Refer to Structural information:

.1 Placement of anchors into concrete & concrete pit

.5 Refer to Electrical information:

.1 Power supply to dock lift.
.2 Conduit as required to complete loading dock equipment wiring installation.

1.04 REFERENCE STANDARDS

.1 ANSI MH30.1 - Performance and Testing Requirements for Dock Leveling Devices 2015.

1.05 SUBMITTALS

.1 General: Submit each item in this Article according to the Conditions of the Contract and the applicable Division 01 Specification Sections.

.2 Shop Drawings:

.1 For dock leveller indicate:

.1 Dimensions of pit and required clearances.
.2 Materials and finish, installation details and operation of unit.
.3 Details of electrical equipment, including wirign diagrams showing location of control stations and disconnect switches.

.2 For dock bumpers, indicate:

.1 Dimensions and required clearances.
.2 Fastening methods for dock bumpers, and details of construction.

.3 Product and Maintenance Data:

.1 Provide *Product* and maintenance data for incorporation into the operation and maintenance manual specified in Section 01 78 00 -

Closeout Submittals

.2 Include:

.1 Installation instructions for loading dock leveler

.2 Complete description and sequence of operation for dock leveler together with wiring diagrams showing electrical connections, manufacturer's instructions covering maintenance requirements, and parts catalogue giving complete list of repair and replacement parts with cuts and identifying numbers.

.3 Dimensioned drawing of leveler installation as installed.

.4 Installer qualifications.

.5 Maintenance Materials, Special Tools and Spare Parts

.1 Provide compete set of tools necessary to maintain and adjust every part of the dock leveler.

.6 Provide high pressure cartridge refill type grease gun and extra cartridge of recommended lubricant, if equipment pressure-gun lubricated.

1.06 QUALITY ASSURANCE

.1 Installer qualifications: A firm specializing in the installation of loading dock equipment with a minimum of 5 years documented experience in installations similar to that required for this *Project* and certified by the manufacturer as an approved installer.

1.07 WASTE MANAGEMENT AND DISPOSAL

.1 Separate waste materials for reuse and recycling in accordance with Section 01 74 19 - Construction Waste Management and Disposal.

.2 Remove from site and dispose of packaging materials at appropriate recycling facilities.

.3 Collect and separate for disposal paper, plastic, polystyrene, and corrugated cardboard packaging material in appropriate on-site bins for recycling in accordance with the Waste Management Plan.

.4 Separate waste materials for reuse and recycling and place in designated containers in accordance with Waste Management Plan.

1.08 WARRANTY

.1 Submit, for the *Owner's* acceptance, a manufacturer's standard warranty document executed by an authorized company official. The Manufacturer's warranty is in addition to, and does not limit, other rights the *Owner* may have under the Contract Documents

PART 2 PRODUCTS

2.01 GENERAL

.1 Use materials and products that contain the maximum possible percentage of recycled material. Steel to contain a minimum of 25% post-industrial recycled material.

2.02 MANUFACTURERS

.1 This specification is based on loading dock equipment by Blue Giant.

.2 Subject to compliance with specification requirements, equivalent products by the following manufacturers are acceptable alternatives prior approval by the *Owner*:
   .1 Pentalift.
   .2 Blue Giant.
   .3 HL Hydraulic
.3 Requests for substitutions will be considered in accordance with provisions of Section 01 25 00 - Substitution Procedures . Acceptance of alternative products is subject to the approval of the consultant.

2.03 DOCK BUMPERS

.1 Laminated DB411 by Blue Giant.

2.04 WHEEL CHOCKS

.1 One pair of Wheel Chocks shall be provided at the Loading Dock. Chocks to be Heavy Duty steel with nominal dimensions of 300 mm long x 200 mm wide x 230 mm high. Nominal weight shall be 9 kg each.

.2 Each chock shall be supplied complete with 5,500 mm of 2/0 welded, coil steel: zinc plated security chain, firmly attached to the bracket and the chock. A galvanises steel wall hook shall be supplied with each chock for mounting on the foundation wall for storage of the chock and chain when not in use.

2.05 DOCK LEVELLER

.1 Model HU6010-30 hydraulic dock leveler by Blue Giant, 13,636 kilos (30,000 lbs). Capacity per ANSI MH30.1. Pit style dock leveler. 406 mm long, high tensile steel lip plate 16 mm. Safety treads deckplate 6mm thick. Regenerative hydraulic system, Power in power out lip control. 89 mm diameter main cylinder, 64 mm diameter lip cylinder. Full range telescoping toe guard. Hinge maintenance post. Below deck control. Self-contained 0.74 kW (1 hp) powerpack. Fall Safe (velocity fuse). confirm and coordinate with Electrical prior to ordering. Provide weatherseal - neoprene 3 sides. Control to provide interlock with overhead door to prevent operation of dock leveler when door is closed. Dock leveler to be hydraulic with remote power unit and greased fittings on all pivot points.

PART 3 EXECUTION

3.01 EXAMINATION

.1 Examine areas and conditions under which work is to be performed and notify the *Consultant* in writing of conditions detrimental to the proper and timely completion of the *Work.*

.2 Do not proceed with the *Work* until unsatisfactory conditions have been corrected to the satisfaction of the installer.

.3 Take field measurements to verify or supplement dimensions.

.4 Commencement of the installation will be construed as acceptance of the site conditions and, thereafter, the *Contractor* shall be fully responsible for satisfactory work as specified herein.

3.02 INSTALLATION

.1 Install loading dock equipment where indicated and where required for a properly functioning installation, in accordance with the reviewed shop drawings and the manufacturers' instructions.

.2 Touch up shop primer to bolts, welds, and burned or scratched surfaces at completion of installation.

.3 Adjust dock lift operating components to ensure a smooth continuous raising and lowering of platforms.

.4 Deck surface in normal down position is to be level and flush with surface of surrounding dock surface.

.5 Install bumpers in accordance with the manufacturer's instructions, as indicated.

3.03 FIELD TESTS

.1 Provide personnel, instruments, materials, and equipment including test vehicles, for the administration and direction of the tests. Test operation of the equipment through all of its motions. Correct defects and repeat test in the presence of the *Contractor* and dock lift manufacturer's representative.

3.04 CLEANING

.1 Upon completion of the installation remove from the premises all surplus material, dirt and debris caused by the work of this Section and leave the installation clean and ready for the intended use by the *Owner.*

.2 Make good any damage caused by the work of this Section.

END OF SECTION 11 13 00

SECTION 11 13 13
LOADING DOCK BUMPERS

PART 1 GENERAL

1.01 SECTION INCLUDES

.1 Loading dock bumpers of molded rubber with attachment frame.

1.02 SUBMITTALS

.1 See Division 01 - General & Supplementary Requirements, for submittal procedures.

.2 Product Data: Submit data on unit dimensions, method of anchorage, and details of construction.

.3 Manufacturer's Installation Instructions: Submit installation requirements.

PART 2 PRODUCTS

2.01 MANUFACTURERS

.1 Loading Dock Bumpers:

.1 Blue Giant Equipment Corporation; [_____]: www.bluegiant.com/#sle.

.2 Pentalift Equipment Corporation; [_____]: www.pentalift.com/#sle.

.3 Rite Hite Corp; [_____]: www.ritehite.com/#sle.

.4 Substitutions: Not permitted.

2.02 COMPONENTS

.1 Loading Dock Bumpers: Molded rubber, ozone resistant, nylon reinforced, Shore A Durometer of 70, minimum, and tensile strength of 6550 to 7240 kPa, minimum.

.1 Projection From Wall: [___] mm, minimum.

.2 Vertical Height: As indicated in the Drawings

.3 Width: As indicated in the Drawings

.4 Profile: Rectangular.

.2 Attachment Hardware: Diameter as required by the bumper manufacturer for the application with galvanized bolts and "L" shaped anchor rods for casting into concrete.

.3 Touch-up Primer: Zinc rich type.

PART 3 EXECUTION

3.01 EXAMINATION

.1 Verify that anchor placement is acceptable.

3.02 INSTALLATION

.1 Install dock bumpers in accordance with manufacturer's instructions.

.2 Set plumb and level.

.3 Secure angled end frames to concrete; refer to Section 03 10 00 for additional information.

.4 Weld angled end frames to steel dock frame, and touch up welds with primer.

END OF SECTION 11 13 13

This page intentionally left blank

SECTION 12 36 00
COUNTERTOPS

PART 1 GENERAL

1.01 RELATED DOCUMENTS

.1 Drawings and general provisions of the Contract, including General and Supplementary Conditions and Division 01 Specification Sections, apply to this Section.

1.02 SECTION INCLUDES

.1 Work Included: The work of this Section includes the provision of all labour, materials, equipment and services required to execute countertops, as indicated on the drawings, as specified herein and as required for the proper completion of the work of all trades, as required for a complete project.

1.03 SECTION INCLUDES

.1 Countertops for architectural cabinet work.

.2 Wall-hung counters and vanity tops.

1.04 RELATED REQUIREMENTS

.1 Section 06 41 16 - Plastic-Laminate-Clad Wood Casework.

.2 Section 09 00 00 - Master Finish Schedule (Refer to Drawings) *

1.05 REFERENCE STANDARDS

.1 ANSI A208.1 - American National Standard for Particleboard 2016.

.2 ANSI A208.2 - American National Standard for Medium Density Fiberboard for Interior Use 2009.

.3 ASTM A666 - Standard Specification for Annealed or Cold-Worked Austenitic Stainless Steel Sheet, Strip, Plate, and Flat Bar 2015.

.4 ASTM C615/C615M - Standard Specification for Granite Dimension Stone 2018, with Editorial Revision.

.5 ASTM D635 - Standard Test Method for Rate of Burning and/or Extent and Time of Burning of Plastics in a Horizontal Position 2022.

.6 AWMAC (GIS) - Guarantee and Inspection Services Program current edition at www.awmac.com/gis.php.

.7 AWMAC/WI (NAAWS) - North American Architectural Woodwork Standards, Canada Version 4.0 2021.

.8 CAN/CSA O121 - Douglas Fir Plywood 2017 (Reaffirmed 2022).

.9 CAN/CSA O151 - Canadian Softwood Plywood 2017 (Reaffirmed 2022).

.10 CAN/ULC S102 - Method of Testing for Surface Burning Characteristics of Building Materials and Assemblies 2018.

.11 CSA O153 - Poplar Plywood 2019.

.12 HPVA HP-1 - American National Standard for Hardwood and Decorative Plywood 2016.

.13 ISFA 2-01 - Classification and Standards for Solid Surfacing Material 2013.

.14 ISFA 3-01 - Classification and Standards for Quartz Surfacing Material 2013.

.15 NEMA LD 3 - High-Pressure Decorative Laminates 2005.

.16 SEFA 2 - Installations 2010.

1.06 SUBMITTALS

.1 See Division 01 - General & Supplementary Requirements, for submittal procedures.

.2 Product Data: Manufacturer's data sheets on each product to be used, including:

.1 Preparation instructions and recommendations.

.2 Storage and handling requirements and recommendations.

.3 Specimen warranty.

.3 Shop Drawings: Complete details of materials and installation; combine with Shop Drawings of cabinets and casework specified in other sections.

.4 Test Reports: Chemical resistance testing, showing compliance with specified requirements.

.5 Certificate: Submit labels and certificates required by quality assurance and quality control programs.

.6 Installer's Qualification Statement.

1.07 QUALITY ASSURANCE

.1 Installer Qualifications: Company specializing in performing work of the type specified in this section, with not less than five (5) years of documented experience.

.2 Quality Certification:

.1 Comply with AWMAC (GIS) woodwork association quality certification service/program in accordance with requirements for work specified in this section: www.awmac.com/#sle.

.2 Provide labels or certificates indicating that the installed work complies with AWMAC/WI (NAAWS) requirements for grade or grades specified.

.3 Provide designated labels on Shop Drawings as required by certification program.

.4 Provide designated labels on installed products as required by certification program.

.5 Submit certifications upon completion of installation that verifies this work is in compliance with specified requirements.

1.08 DELIVERY, STORAGE, AND HANDLING

.1 Store products in manufacturer's unopened packaging until ready for installation.

.2 Store and dispose of solvent-based materials, and materials used with solvent-based materials, in accordance with requirements of local authorities having jurisdiction.

1.09 SITE CONDITIONS

.1 Maintain environmental conditions (temperature, humidity, and ventilation) within limits recommended by manufacturer for optimum results. Do not install products under environmental conditions outside manufacturer's absolute limits.

PART 2 PRODUCTS

2.01 COUNTERTOPS

.1 Quality Standard: Custom Grade, in accordance with AWMAC/WI (NAAWS), unless noted otherwise.

.2 Plastic Laminate Countertops: High-pressure decorative laminate (HPDL) sheet bonded to substrate.

.1 Laminate Sheet: NEMA LD 3, Grade HGS, 1.2 mm nominal thickness.

.1 Surface Burning Characteristics: Flame spread index of 25, maximum; smoke developed index of 450, maximum; when tested in accordance with CAN/ULC S102.

.2 Finish: Matte or suede, gloss rating of 5 to 20.

.3 Surface Colour and Pattern: As indicated on Drawings.

.4 Laminated Plastic Flatwork: Where not otherwise indicated, fabricate countertops and vanities with plastic laminate on 19 mm fir plywood core. Provide self-edged backsplash at counter back and ends against walls and self-edged front-edge banding as indicated. CONFIRM WITH DRAWINGS AND FINISH SCHEDULE FOR SOLID SURFACING COUNTER LOCATIONS.

.2 Exposed Edge Treatment: Postformed laminate; front edge substrate built up to minimum 32 mm thick with radiused edge, integral coved backsplash with radiused top edge.

.3 Back and End Splashes: Same material, same construction.

.3 Solid Surfacing Countertops: Solid surfacing sheet or plastic resin casting over continuous substrate.

.1 Flat Sheet Thickness: 12 mm, minimum.

.2 Solid Surfacing Sheet and Plastic Resin Castings: Complying with ISFA 2-01 and NEMA LD 3 using method 3.8; acrylic polymer, or polyester resin, aluminum trihydrate filler and pigment mineral filler, and pigments; homogenous, non-porous and capable of being worked and repaired using standard woodworking tools; no surface coating; colour and pattern consistent throughout thickness.

.1 Finish on Exposed Surfaces: Matte, gloss rating of 5 to 20.

.3 Other Components Thickness: 12 mm, minimum.

.4 Back and End Splashes as indicated in Drawings: Same sheet material, square top; pencil radius outside corners, minimum 100 mm high.

2.02 MATERIALS

.1 Wood-Based Components:

.1 Wood fabricated from old growth timber is not permitted.

.2 Wood fabricated from timber recovered from riverbeds or otherwise abandoned is permitted, unless otherwise noted, provided it is clean and free of contamination; identify source; provide lumber re-graded by an inspection service accredited by the Canadian Lumber Standards Accreditation Board.

.2 Plywood for Supporting Substrate: Douglas Fir Plywood, CAN/CSA O121, Grade G1S, Exterior; minimum 19 mm thick; join lengths using metal splines.

.3 Adhesives: Chemical resistant waterproof adhesive as recommended by manufacturer of materials being joined.

.4 Joint Sealant: Mildew-resistant silicone sealant, white.

2.03 FABRICATION

.1 Fabricate tops and splashes in the largest sections practicable, with top surface of joints flush.

.1 Join lengths of tops using best method recommended by manufacturer.

.2 Fabricate to overhang fronts and ends of cabinets 25 mm except where top butts against cabinet or wall.

.3 Prepare all cutouts accurately to size; replace tops having improperly dimensioned or unnecessary cutouts or fixture holes.

.2 Provide back/end splash wherever counter edge abuts vertical surface unless otherwise indicated.

.1 Secure to countertop with concealed fasteners and with contact surfaces set in waterproof glue.

.2 Height: 100 mm, unless otherwise indicated.

.3 Solid Surfacing: Fabricate tops and wall panels up to 3650 mm long in one piece; join pieces with adhesive sealant in accordance with manufacturer's recommendations and instructions.

.4 Wall-Mounted Counters: Provide skirts, aprons, brackets, and braces as indicated on Drawings, finished to match.

PART 3 EXECUTION

3.01 EXAMINATION

.1 Do not begin installation until substrates have been properly prepared.

.2 Verify that wall surfaces have been finished and mechanical and electrical services and outlets are installed in proper locations.

.3 Examine areas and conditions under which work is to be performed and notify the *Contractor* in writing of conditions detrimental to the proper and timely completion of the work.

.4 Do not proceed with the work until unsatisfactory conditions have been corrected to the satisfaction of the installer.

.5 Take field measurements to verify or supplement dimensions.

.6 Commencement of the installation will be construed as acceptance of the site conditions and, thereafter, the *Contractor* shall be fully responsible for satisfactory work as specified herein.

3.02 INSTALLATION

.1 Follow all written manufacturer's instructions and guidelines for installation.

.2 Securely attach countertops to cabinets using concealed fasteners. Make flat surfaces level; shim where required.

.3 Attach plastic laminate countertops using screws with minimum penetration into substrate board of 16 mm.

.4 Seal joint between back/end splashes and vertical surfaces.

.5 Ensure no blistering, whitening and/ or cracking of components

3.03 TOLERANCES

.1 Variation From Horizontal: 3 mm in 3 m, maximum.

.2 Offset From Wall, Countertops: 3 mm maximum; 1.5 mm minimum.

.3 Site Joints: 3 mm wide, maximum.

3.04 CLEANING

.1 Clean countertops surfaces thoroughly in accordance with manufacturers instructions.

3.05 PROTECTION

.1 Protect installed products until completion of project.

.2 Touch-up, repair or replace damaged products before Date of Ready-For-Takeover

END OF SECTION 12 36 00

This page intentionally left blank

SECTION 32 17 26
TACTILE WARNING SURFACING

PART 1 GENERAL

1.01 SECTION INCLUDES

.1 Plastic tactile and detectable warning tiles for pedestrian walking surfaces.

1.02 REFERENCE STANDARDS

.1 AASHTO LRFD - Bridge Design Specifications 2017.

.2 ASTM B117 - Standard Practice for Operating Salt Spray (Fog) Apparatus 2019.

.3 ASTM C501 - Standard Test Method for Relative Resistance to Wear of Unglazed Ceramic Tile by the Taber Abraser 2021.

.4 ASTM C903 - Standard Practice for Preparing Refractory Specimens by Cold Gunning 2015 (Reapproved 2020).

.5 ASTM D543 - Standard Practices for Evaluating the Resistance of Plastics to Chemical Reagents 2021.

.6 ASTM D570 - Standard Test Method for Water Absorption of Plastics 1998 (Reapproved 2018).

.7 ASTM D638 - Standard Test Method for Tensile Properties of Plastics 2022.

.8 ASTM D695 - Standard Test Method for Compressive Properties of Rigid Plastics 2015.

.9 ASTM D790 - Standard Test Methods for Flexural Properties of Unreinforced and Reinforced Plastics and Electrical Insulating Materials 2017.

.10 ASTM D2047 - Standard Test Method for Static Coefficient of Friction of Polish-Coated Flooring Surfaces as Measured by the James Machine 2017.

.11 ASTM G155 - Standard Practice for Operating Xenon Arc Light Apparatus for Exposure of Nonmetallic Materials 2021.

.12 CAN/ULC S102 - Method of Testing for Surface Burning Characteristics of Building Materials and Assemblies 2018.

.13 CSA B651 - Accessible Design for the Built Environment 2018.

.14 SAE AMS-STD-595 - Colors Used in Government Procurement 2017a.

1.03 SUBMITTALS

.1 See Division 01 for submittal procedures.

.2 Product Data: Submit manufacturer's product data, standard details, details specific to this project; written installation and maintenance instructions.

.3 Samples: For each product specified provide two samples, 305 mm square, minimum; show actual product, colour, and patterns.

.4 Shop Drawings: Submit plan and detail Drawings. Indicate:

- .1 Locations on project site. Demonstrate compliance with referenced accessibility standards.
- .2 Sizes and layout.
- .3 Pattern spacing and orientation.
- .4 Attachment and fastener details, if applicable

.5 Manufacturer's Qualification Statement.

.6 Installer's Qualification Statement.

.7 Warranty: Submit manufacturer warranty; complete forms in Owner's name and register with manufacturer.

1.04 QUALITY ASSURANCE

.1 Manufacturer Qualifications: Company specializing in manufacturing products specified in this section, with not less than five years documented experience.

.2 Installer Qualifications: Company certified in writing by product manufacturer as having successfully completed work substantially similar to the work of this section.

1.05 DELIVERY, STORAGE, AND HANDLING

.1 Deliver to project site in manufacturer's protective wrapping and in manufacturer's unopened packaging.

.2 Store covered and elevated above grade and in manufacturer's unopened packaging until ready for installation. Maintain at ambient temperature between 4 and 32 degrees C.

1.06 WARRANTY

.1 See Section 01 70 00 - Contract Closeout for additional warranty requirements.

.2 Plastic Tiles: Provide manufacturer's standard five year warranty against manufacturing defects, breakage or deformation.

PART 2 PRODUCTS

2.01 MANUFACTURERS

.1 Plastic Tactile and Detectable Warning Surface Tiles:

.1 Basis of Design: Model "Access Tiles" by Kinesik Engineered Products.

.2 Armor-Tile, a brand of Engineered Plastics, Inc; [_____]: www.armortiletransit.com/#sle.

2.02 TACTILE AND DETECTABLE WARNING DEVICES

.1 Plastic Tactile and Detectable Warning Tiles: CSA B651 compliant, glass fiber and carbon fiber reinforced, exterior grade, matte finish polyester sheet with truncated dome pattern, solid colour throughout, internal reinforcing of sheet and of truncated domes, integral radius cut lines on back face of tile; with factory applied removable protective sheeting.

.1 Material Properties:

.1 Water Absorption: 0.20 percent, maximum, when tested in accordance with ASTM D570.

.2 Slip Resistance: 0.50 minimum dry static coefficient of friction, when tested in accordance with ASTM D2047.

.3 Compressive Strength: 175 MPa, minimum, when tested in accordance with ASTM D695.

.4 Tensile Strength: 70 MPa, minimum, when tested in accordance with ASTM D638.

.5 Flexural Strength: 175 MPa, minimum, when tested in accordance with ASTM D790.

.6 Chemical Stain Resistance: No reaction to 1 percent hydrochloric acid, motor oil, calcium chloride, gum, soap solution, bleach, or

antifreeze, when tested in accordance with ASTM D543.

.7 Abrasion Resistance: 300, minimum, when tested in accordance with ASTM C501.

.8 Flame Spread Index: 25, maximum, when tested in accordance with CAN/ULC S102.

.9 Accelerated Weathering: Delta-E of less than 5.0 at 2,000 hours exposure, when tested in accordance with ASTM G155.

.10 Adhesion: No delamination of tile prior to board failure in a temperature range of minus 7 to 82 degrees C, when tested in accordance with ASTM C903.

.11 Loading: No damage when tested according to AASHTO LRFD test method HS20.

.12 Salt and Spray Performance: No deterioration or other defect after 200 hours of exposure, when tested in accordance with ASTM B117.

.2 Installation Method: Cast in place.

.3 Shape: Rectangular.

.4 Dimensions: 610 mm by 1220 mm.

.5 Pattern: In-line pattern of truncated domes complying with CSA B651.

.6 Colour: SAE AMS-STD-595, Table IV, Federal Yellow No. 33538.

2.03 ACCESSORIES

PART 3 EXECUTION

3.01 EXAMINATION

.1 When installation location is near site boundary or property line, verify required location using property survey.

.2 Verify that work area is ready to receive work:

.1 If existing conditions are not as required to properly complete the work of this section, notify Consultant.

.2 Do not proceed with installation until deficiencies in existing conditions have been corrected.

.3 Verify that dimensions, tolerances, and attachment methods for work in this section are properly coordinated with other work on site.

.4 Coordinate with Civil drawings for responsibility.

3.02 INSTALLATION, GENERAL

.1 Install in accordance with manufacturer's written instructions.

.1 Do not install damaged, warped, bowed, dented, abraded, or otherwise defective units.

.2 Do not install when ambient or substrate temperature has been below 4 degrees C during the preceding 8 daylight hours.

.2 Field Adjustment:

.1 Orient so dome pattern is aligned with the direction of ramp.

.3 Install units fully seated to substrate, square to straight edges and flat to required slope.

3.03 INSTALLATION, CAST IN PLACE PLASTIC TILES

.1 Tamp and vibrate units as recommended by manufacturer.

.2 Place and position weights on units while concrete cures as recommended by manufacturer. Ensure no voids or air pockets exist between top surface of concrete and underside of units.

3.04 CLEANING PLASTIC UNITS

.1 Remove protective plastic sheeting within 24 hours of installation.

.2 Remove excess sealant or adhesive from joints and edges.

.3 Clean four days prior to date of scheduled inspection.

3.05 PROTECTION

.1 Protect installed units from traffic, subsequent construction operations or other imposed loads until concrete is fully cured.

.2 Touch-up, repair or replace damaged products prior to Date of *Ready-For-Takeover.*

END OF SECTION 32 17 26