347 Pido Road, Unit 29
Peterborough, Ontario K9J 6X7
Canada
www.ghd.com

Our ref: 12619478

February 05, 2024

Laurent Malepart
American Iron and Metal
9100, boul. Henri-Bourassa E
Montreal, Quebec
H1E 2S4

Grey Water Tank – 1533 McAdoo's Lane, Kingston, ON

Dear Laurent Malepart,

The following letter was prepared by GHD Limited (GHD) and presents the results of a grey water evaluation that was completed for the above noted location (herein referred to as "the Site"). The municipal address of the Site is 1533 McAdoo's Lane, Kingston, Ontario.

This work was completed to support the handling of grey water from the floor drains of the proposed building. No municipal service is available for the property and due to the hydrogeological sensitivity of the site and surrounding area it is recommended that discharge from the floor drains be directed to a self-contained holding tank. The holding tank would need to be checked periodically for liquid levels and be fitted with a high level alarm. The tank would need to be pumped out periodically and the collected liquid disposed at a licenced facility.

Based on our understanding of the client's use of a similar collection method at another location, it is recommended that the holding tank have a total capacity of 11,500 litres per day (L/day). The proposed location of the tank is shown on the **Site Plan, Figure 1**. A typical schematic of the tank is presented on the **Concept Plan, Figure 2**. A suppliers product sheet is also attached, other suppliers would have a similar vessel.

We trust this letter report meets your immediate requirements. Should questions arise regarding any aspect of this letter, please contact the undersigned or our office.

Regards,

GHD

Steve Gagne, H.S.Bc.

Andy Fawcett, P.Eng

Figures

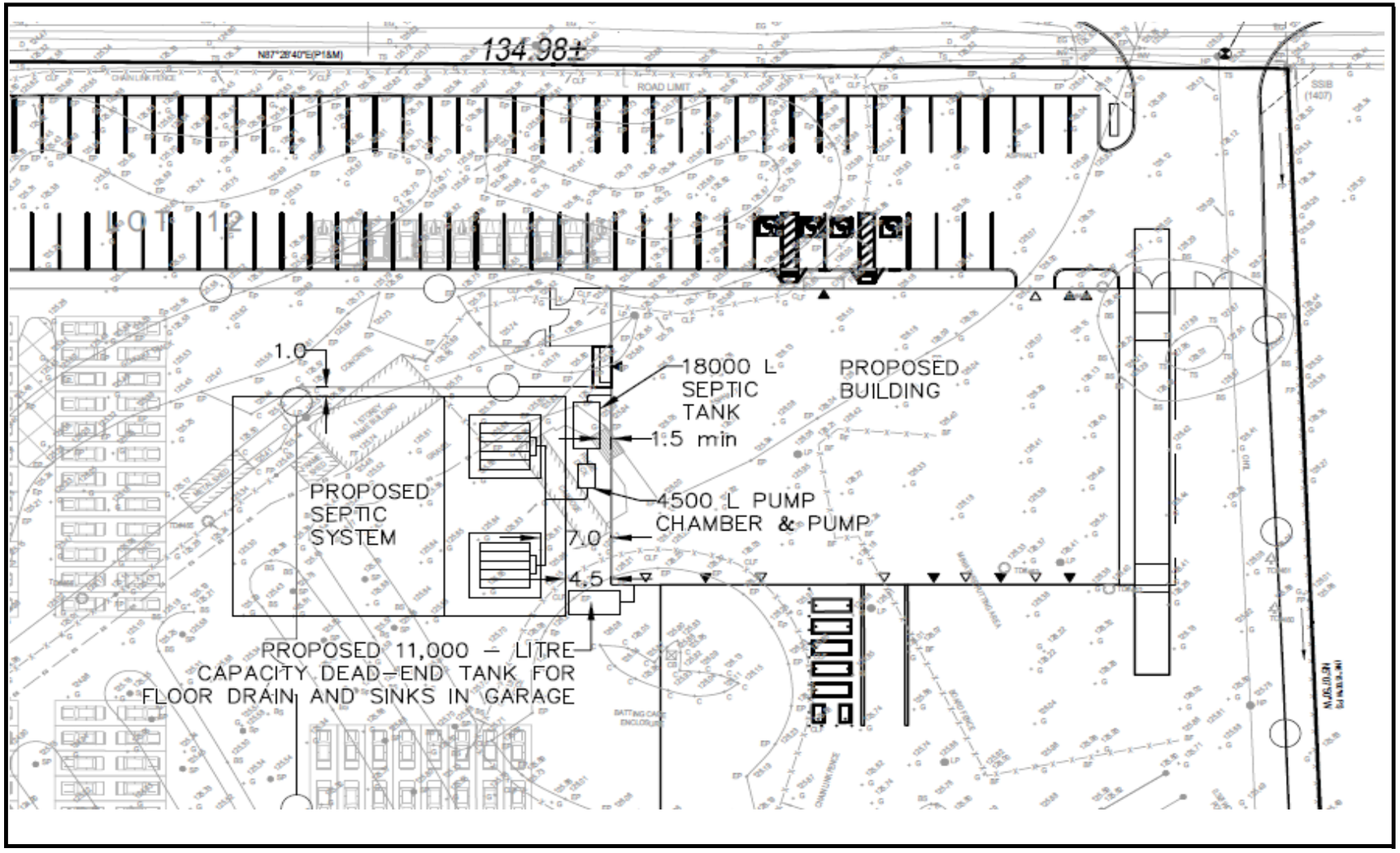

LICENSED PROFESSIONAL ENGINEER
A. F. FAWCETT
PROVINCE OF ONTARIO

GHD

American Iron and Metal
1533 McAdoo's Lane, Kingston, ON

12575911
February 7, 2024

Site Plan

FIGURE 1

PROPOSED 11,000–LITRE CAPACITY DEAD–END TANK FOR FLOOR DRAINS IN GARAGE

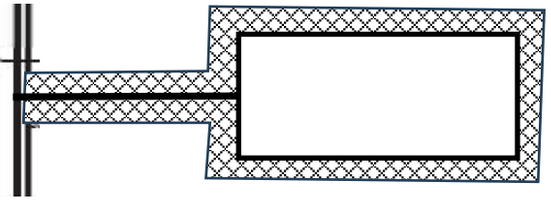

DEAD–END FOR GREYWATER

(NOT TO SCALE)

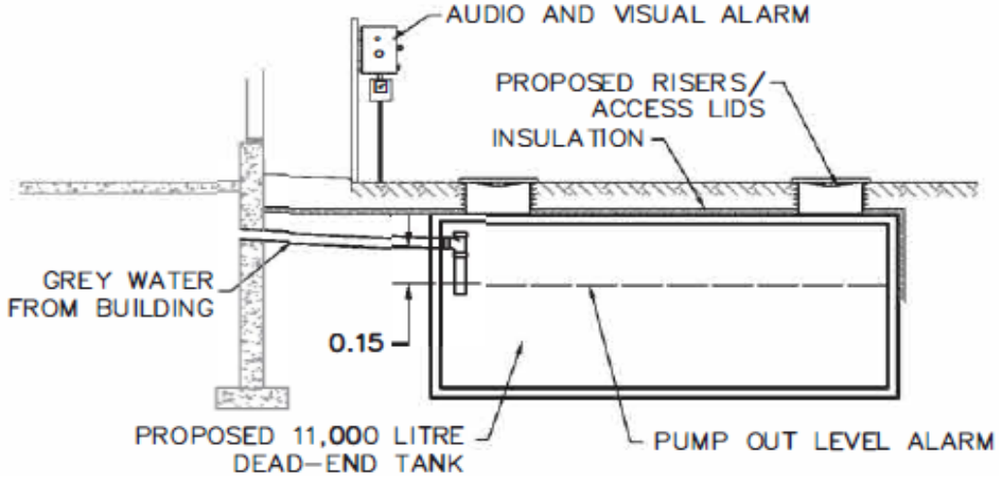

LICENSED PROFESSIONAL ENGINEER
A. F. FAWCETT
PROVINCE OF ONTARIO

GHD

American Iron and Metal
1533 McAdoo's Lane, Kingston, ON

12575911
February 7, 2024

Concept Plan

FIGURE 2

Appendices

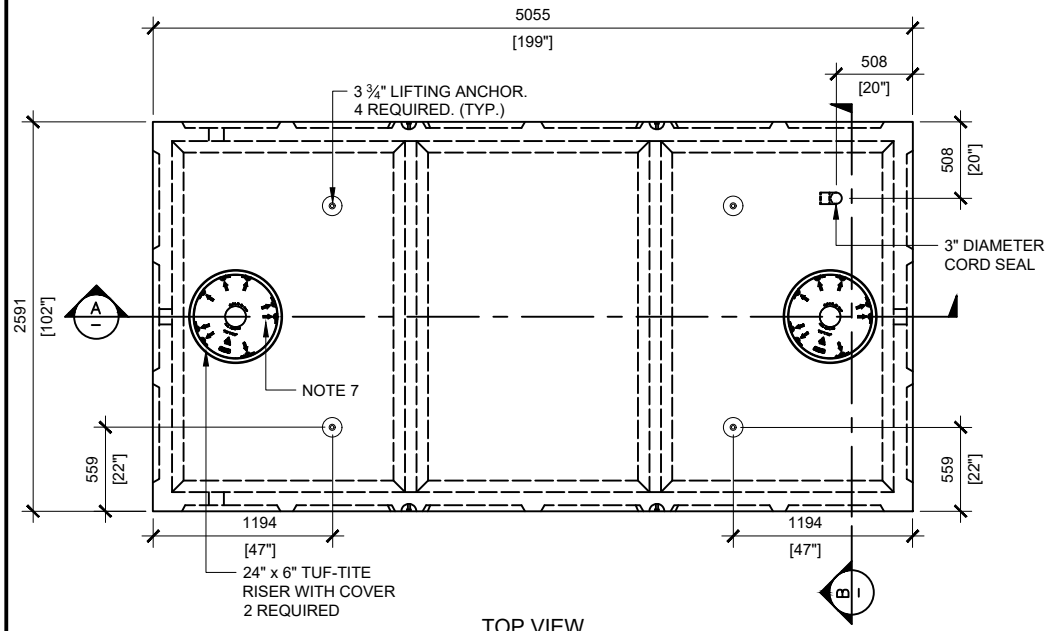

TOP VIEW
SCALE:1/50

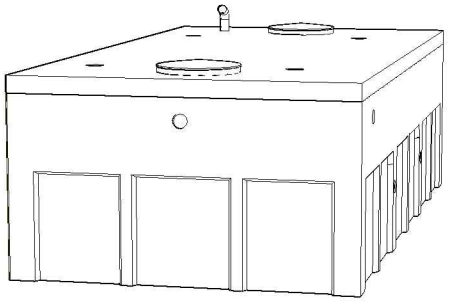

GENERAL NOTES:

1. UNITS ARE SEALED WITH BUTYL TAPE AT THE JOINTS
2. DELIVERY IS MADE BY CRANE-EQUIPPED TRUCKS
3. EXCAVATION MUST BE READY, SAFE AND ACCESSIBLE FOR UNLOADING FROM THE REAR OF THE TRUCK.
4. MIN OVERHEAD CLEARANCE OF 18FT (5.5 METERS) IS REQUIRED
5. ALL UNITS MUST BE HANDLED WITH PROPER LIFTING EQUIPMENT
6. MAXIMUM BURIAL DEPTH = 1 METRE IN FIRM SOIL AWAY FROM ANY VEHICULAR TRAFFIC
7. TUF-TITE SAFETY LIDS INSTALLED IN BOTH OPENINGS AS PER CSA-B66-21

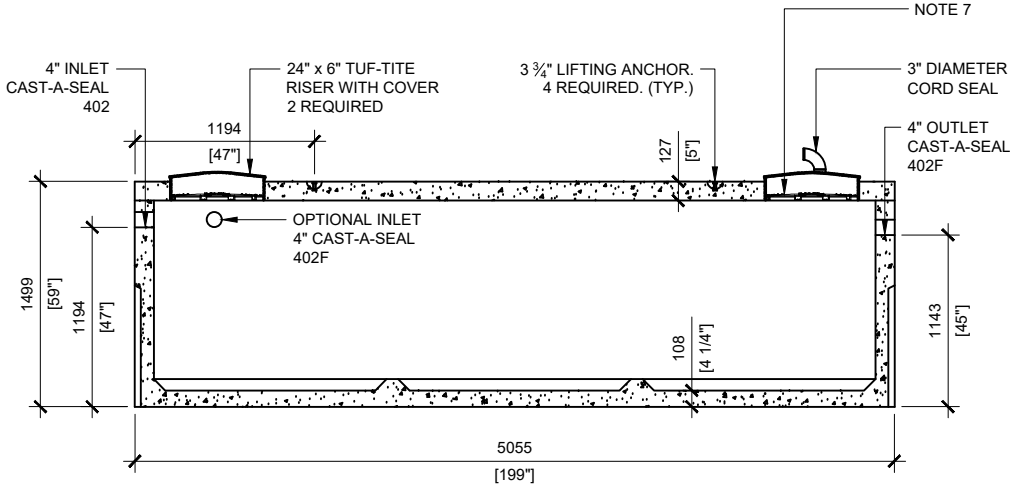

SECTION A
SCALE:1/50

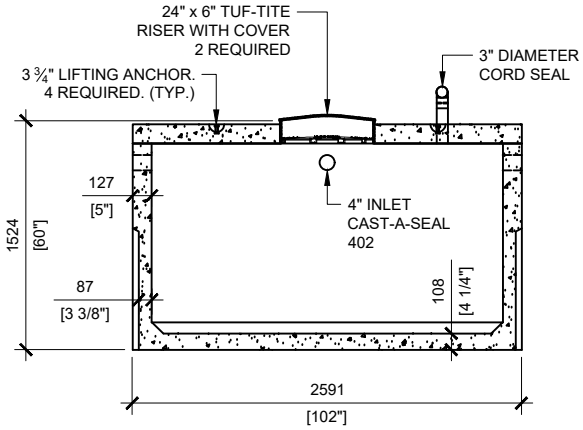

SECTION B
SCALE:1/50

BROOKLIN CONCRETE PRODUCTS

MANUFACTURED:
BROOKLIN, ON
1-800-655-3430

CONCRETE: 35MPa at 28 days/5000PSI
AIR ENTRAINMENT: 5-8%
REINFORCEMENT: STEEL TO CSA CAN A23.1 /A23.3 G30.18 Fy=400MPa

WEIGHT: 27,180lbs / 12,330kg
CPA CERTIFIED
MEETS CAN/CSA-B66
"AGINP"

DRAWN BY: JAY PATEL
DATE: APRIL/2022

11000 LITRES SINGLE CHAMBER

WORKING CAPACITY: 12,136L TO INVERT OF INLET
TOTAL CAPACITY: 14,086L TO UNDERSIDE OF CHAMBER LID