# Kingston Health Sciences Centre

## HDH Jeanne Mance Level 0 MDR Phase 2 Infrastructure

## Construction Documents
## Project Manual

**Issued For Bid/Permit**

**2023-05-16**

**HDR Project No. 10358808**

hdrinc.com

**HDR Architecture Associates, Inc.**
27 Princess Street, Suite 400 | Kingston, ON, K7L 1A3
**T** 613-549-1403

This page intentionally left blank.

# TABLE OF CONTENTS

**DIVISION 00 — PROCUREMENT AND CONTRACTING REQUIREMENTS**
00 00 07 - SEAL SHEET
00 01 15 - LIST OF DRAWINGS
00 21 13 - INSTRUCTIONS TO BIDDERS
00 41 00 - BID FORM
00 73 00 - SUPPLEMENTARY CONDITIONS

**DIVISION 01 — GENERAL REQUIREMENTS**
01 11 00 - SUMMARY OF WORK
01 14 00 - WORK RESTRICTIONS
01 14 00A - KHSC VACCINATION POLICY FOR CONTRACTORS & SERVICE PROVIDERS - SEP 1, 2021
01 25 00 - SUBSTITUTION PROCEDURES
01 26 00 - CONTRACT MODIFICATION PROCEDURES
01 29 00 - PAYMENT PROCEDURES
01 31 19 - PROJECT MEETINGS
01 32 00 - CONSTRUCTION PROGRESS DOCUMENTATION
01 33 00 - SUBMITTAL PROCEDURES
01 35 00 - SPECIAL PROCEDURES
01 35 30 - HEALTH AND SAFETY REQUIREMENTS
01 35 33 - INFECTION CONTROL GUIDELINES FOR CONSTRUCTION
01 35 33.01 - INFECTION CONTROL ASSESSMENT
01 40 00 - QUALITY REQUIREMENTS
01 51 00 - TEMPORARY UTILITIES
01 52 00 - CONSTRUCTION FACILITIES
01 56 00 - TEMPORARY BARRIERS AND ENCLOSURES
01 57 00 - TEMPORARY CONTROLS
01 61 00 - COMMON PRODUCT REQUIREMENTS
01 71 00 - EXAMINATION AND PREPARATION
01 73 00 - EXECUTION
01 73 29 - CUTTING AND PATCHING
01 74 00 - CLEANING AND WASTE MANAGMENT
01 77 00 - CLOSEOUT PROCEDURES
01 78 00 - CLOSEOUT SUBMITTALS

**DIVISION 02 — EXISTING CONDITIONS**
02 41 99 - DEMOLITION
02 61 33 - DESIGNATED SUBSTANCES REPORT
02 61 33.01 - HAZARDOUS BUILDING MATERIALS ASSESSMENT

**DIVISION 04 — MASONRY**
04 05 10 - CONCRETE AND MASONRY CLEANING
04 05 13 - PORTLAND CEMENT - LIME MORTAR AND GROUT
04 05 23 - MASONRY ACCESSORIES
04 22 00 - CONCRETE MASONRY (CMU)

**DIVISION 05 — METALS**
05 50 00 - METAL FABRICATIONS

**DIVISION 07 — THERMAL AND MOISTURE PROTECTION**
07 92 16 - INTERIOR JOINT SEALANTS

**DIVISION 09 — FINISHES**
09 22 16 - NON-STRUCTURAL METAL FRAMING
09 29 00 - GYPSUM WALLBOARD

09 51 13 - ACOUSTICAL PANEL CEILINGS
09 53 00 - ACOUSTICAL SUSPENSION
09 66 23 - THIN-SET EPOXY TERRAZZO (TER)
09 91 23 - INTERIOR PAINTING

**DIVISION 20 MECHANICAL COMMON WORK RESULTS**
20 05 05 MECHANICAL WORK GENERAL INSTRUCTIONS
20 05 10 BASIC MECHANICAL MATERIALS AND METHODS
20 05 25 MECHANICAL INSULATION
20 05 35 DEMOLITION AND REVISION WORK

**DIVISION 21 FIRE SUPPRESSION**
21 13 00 FIRE PROTECTION SPRINKLER SYSTEM

**DIVISION 22 PLUMBING**
22 11 00 DOMESTIC WATER PIPING AND SPECIALTIES
22 13 00 DRAINAGE AND VENT PIPING AND SPECIALTIES
22 15 00 GENERAL SERVICE COMPRESSED AIR SYSTEM

**DIVISION 23 HEATING, VENTILATING AND AIR CONDITIONING**
23 22 00 STEAM AND CONDENSATE PIPING AND PUMPS
23 30 00 HVAC AIR DISTRIBUTION

**DIVISION 26/27/28 - ELECTRICAL**
26 00 10 ELECTRICAL WORK GENERAL INSTRUCTIONS
26 05 00 BASIC ELECTRICAL MATERIALS AND METHODS
26 05 19 LOW VOLTAGE CABLES
26 05 20 WIRE AND BOX CONNECTORS 0-1000V
26 05 26 GROUNDING AND BONDING
26 05 29 HANGERS AND SUPPORTS ELECTRICAL SYSTEMS
26 05 31 SPLITTERS, JUNCTION, PULL BOXES
26 05 32 OUTLET BOXES, CONDUIT BOXES AND FITTINGS
26 05 34 CONDUITS, CONDUIT FASTENINGS AND FITTINGS
26 05 70 ELECTRICAL WORK ANALYSIS AND TESTING
26 05 90 HAZARDOUS MATERIALS
26 27 26 WIRING DEVICES
26 28 16.02 MOULDED CASE CIRCUIT BREAKERS
26 28 23 DISCONNECT SWITCHES – FUSED AND NON-FUSED
26 50 00 LIGHTING
27 05 28 PATHWAYS FOR COMMUNICATIONS SYSTEMS
27 10 00 STRUCTURED CABLING
28 31 00 FIRE ALARM SYSTEM

**APPENDICES**
APPENDIX I
AMSCO 400 STERILIZER PREVAC SINGLE (HINGE) DOOR RECESSED STEAM...
STERIS-CENTURY-V160-STERILIZER-TECHNICAL-SPECIFICATIONS
APPENDIX II
VIDMAR STORAGE SOLUTIONS

# SECTION 00 00 07

SEAL SHEET

| COMPANY | SEAL | SECTIONS |
|---|---|---|
| **HDR Architecture Associates, Inc.**<br>27 Princess Street, Suite 400<br>Kingston, Ontario. K7L 1A3<br><br>Telephone: (613) 549-1403<br><br>PRIME CONSULTANT | | Divisions 0, 1, 2, 5, 6, 7, , and 9 |
| **WSP Canada Inc.**<br>1224 Gardiners Road, Suite 201<br>Kingston, Ontario, K7P 0G2, Canada<br><br>Telephone: (613) 634-7373<br>Fax: (613) 634-3523<br><br>MECHANICAL CONSULTANT | | Divisions 20, 22, and 23 |
| **WSP Canada Inc.**<br>1224 Gardiners Road, Suite 201<br>Kingston, Ontario, K7P 0G2, Canada<br><br>Telephone: (613) 634-7373<br>Fax: (613) 634-3523<br><br>ELECTRICAL CONSULTANT | | Division 26 |

**END OF SEAL SHEET**

This page intentionally left blank.

# SECTION 00 01 15

LIST OF DRAWINGS

## ARCHITECTURAL

A000 COVER SHEET
A001 OBC MATRIX AND DETAILS
A050 ARCHITECTURAL DEMOLITION
A100 ARCHITECTURAL NEW WORK

## MECHANICAL

M100 KEY PLAN AND LEGENDS
M101 PARTIAL LEVEL 0 FIRE PROTECTION DEMOLITION & NEW
M200 PARTIAL LEVEL 0 PLUMBING SYSTEMS DEMOLITION & NEW
M300 PARTIAL LEVEL 0 STEAM SYSTEMS DEMOLITION & NEW
M400 PARTIAL LEVEL 0 HVAC SYSTEMS DEMOLITION & NEW

## ELECTRICAL

E101 ELECTRICAL LEGEND AND DETAILS
E102 LIGHTING LAYOUTS
E201 POWER AND SYSTEM LAYOUTS

**END OF LIST OF DRAWINGS**

This page intentionally left blank.

# SECTION 00 21 13
## INSTRUCTIONS TO BIDDERS

### 1.1 COMPLIANCE

A. The bidder acknowledges that by submitting a compliant bid, it has accepted an offer by the *Owner* to enter into a "bid contract" for the evaluation of bids and the award of the *Contract*, if an award is made. The bidder acknowledges that the terms of the "bid contract" are represented by the Bid Documents.

B. A bid which fails to comply with the requirements of these Instructions to Bidders may cause a bid to be declared non-compliant.

### 1.2 INTENT

A. The intent of this Bid call is to obtain an offer to perform work to complete the *Kingston Health Sciences Centre - HDH Jeanne Mance Level 0 MDR Phase 2 Infrastructure* for a Stipulated Price contract, in accordance with the *Contract Documents*.

B. Initiate work within 2 weeks of receipt of notice of *Contract* award.

C. Achieve *Ready-for-Takeover* and *Total Completion of the Work* by the *Scheduled Ready-for-Takeover Date* and *Scheduled Total-Completion Date* as defined by Supplementary Conditions 2.2 H. and 2.2 I.

### 1.3 CONTRACT DOCUMENTS IDENTIFICATION

A. *Contract Documents* are identified as *Kingston Health Sciences Centre - HDH Jeanne Mance Level 0 MDR Phase 2 Infrastructure Owner*'s project number *PLO 22-0014, HDR Architecture Associates, Inc., Contract* number *10358808* as prepared by *HDR Architecture Associates, Inc.,* Prime Consultant

B. The form of *Contract* for this project will be the CCDC 2-2020 and Supplementary Conditions included in section 00 73 00.

C. The following documents form the basis of this bid process (the "Bid Documents"):
1. Instructions to Bidders
2. Bid Forms
3. Agreement, Definitions and General Conditions of the CCDC 2-2020
4. Supplementary Conditions
5. *Specifications* (per List of Contents)
6. *Drawings* (per List of Drawings)
7. Addenda issued during bidding period

D. Check Bid Documents for completeness upon receipt. Inform *Consultant* immediately should any documents be missing or incomplete or upon finding any discrepancies or omissions.

E. Documents obtained from sources other than the Prime Consultant may be incomplete or otherwise deficient. Bidders assume all risks associated with the use of such documents.

F. Unauthorized reproduction of Bid Documents is prohibited without written consent of the *Consultant*.

G. The Bid Documents are made available only for the purpose of submitting bids for the *Project*. Availability and/or use of the Bid Documents do not confer a license or grant for any other purpose.

H. Bid Documents are on display at the following construction association plans rooms:
*1.* Kingston Construction Association, *1575 John Counter Boulevard, Kingston, Ontario. K7M 3L5*

I. Except as otherwise defined in these Instructions to Bidders, the defined terms in these Bid Documents are taken from the *Contract*. The term *Contract* is defined in the Agreement.

## 1.4 CONDITIONS OF THE PLACE OF THE WORK

A. The *Place of the Work* is located at the *Hotel Dieu Hospital Site*, *166 Brock St., Kingston, Ontario*.

B. Before submitting a bid, investigate the *Place of the Work* to fully ascertain existing conditions, circumstances and limitations affecting the *Work*. No allowances will be made for additional costs and no claims will be entertained in connection with conditions which could reasonably have been ascertained by such investigation or other due diligence prior to submitting a bid.

## 1.5 MANDATORY SITE MEETING

A. A mandatory site meeting has been scheduled to take place on ***May 23rd, 2023 @ 09:00 h*** and is to commence from the 166 Brock Street Hotel Dieu Hospital **Johnson Street Staff Entrance.**
   1. All prequalified general contract bidders must attend and will be required to sign the "Site Meeting Log" to confirm their attendances.
   2. Prequalified mechanical and electrical subcontract bidders may attend but are not required.

**B. All general contractor bidders and mechanical and electrical subcontract bidders are to advise the *Consultant* and *Owner* of their intent to bid and identify name(s) of individuals that will be attending the Mandatory Site Meeting by *16:00 h May 18th, 2023*. Visitor names will be added to our COVID-19 Screening database prior to the site visit.**
   1. Consultant representative:
      **Reginald Hesman**
      **HDR Architecture Associates, Inc.**
      **Phone: 613-776-0507**
      **Email: reginal.hesman@hdrinc.com**
   2. Owner representative:
      **Scott Farmer**
      **Kingston Health Sciences Centre**
      **Phone: 613-549-6666 x3620**
      **Email: scott.farmer@kingstonhsc.ca**

C. All contractors will be screened when entering any Kingston Health Sciences Centre sites. For COVID-19 screening, all staff, volunteers, vendors (including contractors) must enter through designated staff entries where screening will occur for proof of double COVID-19 vaccination and COVID-related risks such as symptoms, travel history, and possible contact with affected travellers and/or suspected or confirmed cases of COVID-19. After hands sanitizing, all visitors must wear KHSC provided masks for the duration of the visit, and other PPE as directed by *Owner* representative.

D. Bidders not in attendance at the mandatory site visit, as determined by the "Site Meeting Log" will not be permitted to submit a bid for this project. Bids received by the *Owner*, submitted by general contract bidders not in attendance will be returned unopened.

## 1.6 PREQUALIFICATION

A. The following bidders have been prequalified:
   1. E.S. Fox
   2. GEN-EER Construction
   3. Bradford Construction
   4. David J. Cupido Construction Limited
   5. Emmons & Mitchell Construction (2000) Limited
   6. M. Sullivan & Son Limited

B. Bidders must use *Subcontractors* from the following prequalified list:
   1. Mechanical Subcontract Bidders:

a. Alex McCoy
b. E.S Fox Ltd
c. Kelson Mechanical

2. Electrical Subcontract Bidders:
   a. E.S Fox Ltd
   b. Modern Niagara
   c. A.M. Tech Electrical Supply
   d. Plan Group
   e. McClement Electrical Ltd

C. Bids received from bidders which have not been prequalified shall be returned unopened.

## 1.7 BID AND PERFORMANCE SECURITY

A. Each bid submitted shall be accompanied by bid security in the form of a Bid Bond in an amount of not less than 10% of Bid price submitted, naming the *Owner* as obligee and issued by a surety licensed to conduct surety and insurance business in Ontario. The bid security is for the benefit of the *Owner* and stands as security that the bidder, if awarded the *Contract*, will deliver the performance security and evidence of insurance and other documents required by these Instructions to Bidders or by the *Contract*, and will execute the *Contract*. The bid security shall remain valid for a period of ninety (90) days from the date of bid submission. No other form of bid security is acceptable.

B. The bid security of the bidder whose bid is accepted will be retained by the *Owner* to compensate the *Owner* for the damages it will suffer should the successful bidder fail to execute the *Contract* and/or fail to provide the specified performance security and/or evidence of insurance and other documents required by these Instructions to Bidders or by the *Contract*.

C. The bid security of the bidder whose bid is accepted will be returned after the delivery of the specified performance security and evidence of insurance and other documents required by these Instructions to Bidders or by the *Contract*, and after the execution of the *Contract*. The bid security of all other bidders will be returned after the execution of the *Contract* or after the expiry of this bid process without an award of *Contract* or after the rejection of all bids.

D. Each bid shall be accompanied by an agreement to bond issued by the same surety company that provides the bid bond, undertaking to provide a fifty percent (50%) Performance Bond and a fifty percent (50%) Labour and Material Payment Bond, both to be delivered to the *Owner* if the bidder is awarded the *Contract*.

E. Bids not accompanied by the required bid security, the required agreement to bond and declaration of insurance may be declared non-compliant and be disqualified at the discretion of the *Owner*.

F. Include the cost of all bonds in the bid price.

G. All forms shall be latest CCDC approved bonding forms.

## 1.8 UNDERTAKING OF INSURANCE

A. Provide signed "Undertaking of Insurance" on standard form provided by insurance company stating intention to provide insurance to Bidder in accordance with insurance requirements of *Contract Documents*. Include this form with Bid submission.

## 1.9 AMENDMENTS TO BID DOCUMENTS

A. Direct questions arising during the bidding period to:

**Reginald Hesman**
**HDR Architecture Associates, Inc.**
**Email:** **reginald.hesman@hdrinc.com**

B. The Bid Calling Authority shall be the sole contact for bidding inquiries on this *Project*.

C. Neither the *Owner* nor the *Consultant* will be responsible for instructions, clarifications or amendments communicated orally. Instructions, clarifications, or amendments which affect the Bid Documents may only be made in writing by written addendum.

D. If bidders find discrepancies, omissions, errors, departures from building by-laws, codes or good practice, and points considered to be ambiguous or conflicting, they shall bring them to the attention of the Bid Calling Authority in writing, not less than seven (7) *Working Days* before the bid closing date, so that the *Consultant* may, if the *Consultant* deems it necessary, issue instructions, clarifications or amendments by addendum to all bidders prior to the bid closing date. The *Consultant* will endeavor to issue such addenda at least forty-eight (48) hours prior to bid closing date.

E. Addenda issued during the bidding period shall become part of the Bid Documents and their receipt shall be acknowledged in the space provided on the Bid Form. Addenda will be sent to all bidders. Associated costs shall be included in the Base Bid.

**1.10 REQUESTS FOR CLARIFICATION**

A. The *Consultant* may contact any one or more bidders to request clarification without any obligation to contact other bidders. Such additional clarification shall be provided promptly by the bidder to the *Consultant*.

B. Requests for information shall not be construed as acceptance of a bid.

**1.11 PRODUCT/SYSTEM OPTIONS**

A. Where Bid Documents stipulate a particular product, consideration for *consultant* approved equivalents will be considered by *Consultant* up to ten (10) days before receipt of Bids.

B. Bidders shall supply the *Consultant* with all pertinent data required to carry out a detailed review of the proposed equivalent.

C. When a request to substitute a product is made, *Consultant* may approve equivalents and will issue an Addendum to known bidders.

D. In submission of equivalents to products specified, Bidders shall include in their Bid, any changes required in work to accommodate such substitutions. A later claim by Bidder for an addition to contract price because of changes in work necessitated by use of substitutions shall not be considered.

E. Unless equivalents are submitted in this manner and subsequently accepted, provide products as specified.

**1.12 VALUE ADDED TAXES**

A. The bid price shall not include any *Value Added Taxes*. All other eligible taxes shall be included in the bid price. Any taxes or increases to taxes announced prior to the date of the issuance of the Bid Documents and scheduled to come into effect subsequent to it shall be taken to be included in the bid price.

**1.13 BID COMPLETION**

A. Fill in all blank spaces on the Bid Forms in ink, or typewritten, providing all information requested, and ensure an authorized person or persons sign all forms where indicated. Failure to provide all requested information on the Bid Form and failure to fill in all blank spaces may result in a bid being declared non-compliant at the *Owner*'s discretion.

B. Use only the Bid Form issued as part of the Bid Documents for this Project. If any or all pages of the Bid Forms are amended by addendum, the Bid Form will be reissued in its entirety. The latest Bid Form shall be used when submitting as bid. Failure to comply with this paragraph may result in the bid being declared non-compliant at the *Owner*'s discretion.

C. Information provided by bidders on the Bid Forms may be amended prior to bid closing, provided corrections are initialed by an authorized representative of the bidder. Other modifications, erasures, additions, conditions, qualifications or un- initialed pre-closing amendments may result in the bid being declared non-compliant at the *Owner*'s discretion.

D. Bids that are not originals, are unsigned, improperly signed, un- initialed, incomplete, conditional or illegible, may be declared non-compliant at the *Owner*'s discretion.

E. Bid Price
   1. The Bid Form provides that the bid price shall be provided in numbers and expanded written text.
   2. Where the Bid Forms require the bidder to provide a breakdown of the bid price, the bid price shall govern in the case of conflict or ambiguity between the bid price and the sum of the breakdown of the bid price.
   3. In the case of a conflict or ambiguity between the numeric and written bid price, the numeric price shall govern.

F. Listing of *Subcontractors*
   1. Where required by the Bid Documents, a bidder shall complete and submit a Supplementary Bid Form – List of *Subcontractors*, naming the *Subcontractors* and *Suppliers* which the bidder will employ to perform an item of the *Work* called for by the *Contract*. Failure of the bidder to list *Subcontractors* and *Suppliers*, where required, or the listing by a bidder of more than one *Subcontractor* and *Supplier* to perform or supply an item of work listed, may result in the bid being declared non-compliant.
   2. Where a bidder lists "own forces" in lieu of a *Subcontractor*, the bidder shall carry out such item of the *Work* with its own forces. Where "own forces" have been listed by a bidder, the *Owner* reserves the right to obtain information from the bidder and from third parties respecting the qualifications and experience of the bidder's "own forces" for such item of the *Work*. If the *Owner*, acting reasonably, determines that the bidder's "own forces" are not sufficiently qualified or sufficiently experienced to undertake such item of the *Work*, it may reject the bid.

G. Itemized Prices: Where required by the Bid Document, a bidder shall complete and submit a Supplementary Bid Form – Itemized Prices. The costs associated with Itemized Prices shall be included in the base bid and are provided to the *Owner* for informational purposes. The *Owner* reserves the right to use such pricing to delete scope from the project for budgetary reasons, at their discretion.

H. Identified Prices: Where required by the Bid Document, a bidder shall complete and identify on their submitted bid form. The costs associated with Identified Prices shall be included in the base bid and are provided to the *Owner* for informational purposes.

I. Alternative Prices: Where required by the Bid Documents, a bidder shall complete and submit a Supplementary Bid Form – Alternative Prices. Alternative prices shall show the net difference in cost of supplying and installing the alternative constructions or materials in lieu of the constructions or materials indicated on the drawings and/or described in the specifications. The *Owner* reserves the right to accept or reject any or all alternative prices, at their discretion.

J. Unit Prices: Where required by the Bid Documents, a bidder shall complete and submit a Supplementary Bid Form – Unit Prices. Submit Unit Prices for the items of work listed. Unit Prices shall show the total cost of supplying and installing work listed. Unit Prices shall include all overhead and profit for the *Contractor* and *Subcontractor* and shall follow the intent and conditions for each part of the work indicated on the drawings and/or described in the specifications.

K. Separate Prices: Provide separate prices for items of work as listed on the Bid Form. Separate Prices ARE NOT included in the Base Bid submitted. The *Owner* reserves the right to accept of reject any or all alternative prices, at their discretion.

### 1.14 BID ELIGIBILITY

A. Bid eligibility will be determined by and at the discretion of the *Owner* and Bid Calling Authority based on the requirements set by the Bid Documents.

B. Bids that are unsigned, improperly signed or sealed, conditional, illegible, obscure, contain arithmetical errors, erasures, alterations, or irregularities of any kind, may be declared informal at the discretion of the *Owner*.

C. The *Owner* reserves the right to obtain additional information from the bidders following receipt of the bids and prior to the selection of a successful bidder, as required to aide in the review and selection of a successful bidder, including, but not limited to the correction of irregularities.

### 1.15 BID SUBMISSION

A. Submit one (1) completed original of the Base Bid Form, and any required Supplementary Bid Forms, accompanied by the bid enclosures, in a sealed opaque envelope. Ensure that the outside of the envelope bears the bidder's return address and a label clearly identifying the *Project* Name and *Contract* Number for which the bid is submitted.

B. Bids shall be signed under seal, executed, and dated and will be addressed to and received by:

**Mr. Stacey Gregory**
**Director, Redevelopment & Planning**
**c/o Mr. Scott Farmer**
**Kingston Health Sciences Centre**
**Planning Office**
**24 Barrie Street,**
**Kingston ON K7L 3J6**

C. Bids must be received before ***15:00 h local time on June 6th, 2023***. The term "local time" shall mean the time as measured by the identified clock at the recipient's location.

D. Bids will be date and time stamped at the place receiving the bids.

E. Bids which are submitted by facsimile transmission or by electronic means will not be considered.

F. Bidders are solely responsible for the method and timing of delivery of their bids.

### 1.16 BID EXPIRY PERIOD

A. Bids shall be irrevocable for a period of ninety (90) days from the date of submission, after which period the bid expires.

### 1.17 BID OPENING AND EVALUATION

A. Bids will be opened in public at the office of the *Owner*, located at *24 Barrie Street, Kingston, Ontario*, *Room 17-205* immediately following the close of bids.

B. To gain access to the building, please call:
**Scott Farmer**
**Kingston Health Sciences Centre**
**Phone: 613-530-7189**

C. In the event that more than one envelope is received from the same bidder, only the last envelope received will be considered.

D. The Bids will be reviewed by the Bid Calling Authority and the *Owner*.

E. CCDC 23-2005 "A Guide to Calling Bids and Awarding Contracts" and CCA 29-1995 "A Guide on Standard Contracting and Bidding Procedures" will be used as guidelines in reviewing the bids.

## 1.18 AWARD OF CONTRACT, EXECUTION OF THE CONTRACT AND DOCUMENTS TO BE DELIVERED

A. Bidders shall not issue or make any statements or news release concerning their bid, the bid process, the *Owner*'s evaluation of the bids, or the *Owner*'s award or cancellation of the bid process without the express written consent of the *Owner*.

B. If the *Owner* decides to award the *Contract* to a bidder, the *Consultant* will issue a Letter of Intent on behalf of the *Owner*.

C. Prior to commencing the *Work*, the *Contractor* shall deliver to the *Owner* the following:
   1. Performance Bond and the Labour and Material Payment Bond described in the Bid Documents, the form of such bonds to comply with the requirements of the *Contract*;
   2. Certificate of Insurance. Certified true copies of the insurance policies required by the Bid Documents shall be provided within 90 days of notice of award of contract; and
   3. Current Clearance Certificate issued by the Workplace Safety and Insurance Board.
   4. Schedule "A" – Key Personnel as outlined in 01 11 00 paragraph 1.2.

D. The *Contractor* shall execute the *Contract* and deliver the executed original to the *Owner* within ten (10) *Working Days* of receipt from the *Consultant*.

E. The *Owner* will be recognized as *"Kingston Health Sciences Centre".*

## 1.19 LIMIT OF LIABILITY

A. The liability of the bidder to the *Owner* for loss and damage arising out of the bidder's breach of the "bid contract" shall be limited to the lesser of the actual loss suffered by the *Owner* and the amount indicated on the Bid Bond.

B. The liability of the *Owner* to any bidder for loss and damage arising in tort or for the breach by the *Owner* of the "bid contract" shall be limited to the lesser of the sum of the Bid Bond and the reasonable cost to the bidder of preparing its bid.

## 1.20 DISPUTES

A. In the event of a dispute arising in connection with this bid process including, without limitation, a dispute concerning the existence of the "bid contract" or a breach of the "bid contract", or a dispute as to whether the bid of any bidder was submitted on time or whether a bid is compliant, the *Owner* may refer the dispute to a confidential binding arbitration pursuant to the Arbitration Act, 1991, as amended, before a single arbitrator with knowledge of procurement/bidding law. In the event that the *Owner* refers the dispute to arbitration, the bidder agrees that it is bound to arbitrate such dispute with the *Owner*. Unless the *Owner* shall refer such dispute to binding arbitration, there shall be no arbitration of such dispute.

B. In the event the *Owner* refers a dispute to binding arbitration, the *Owner* may give notice of the dispute to one or more of the other bidders who submitted bids, whether or not they may be compliant, each of who m shall be a party to and shall be entitled to participate in the binding arbitration, and each of whom shall be bound by the arbitrator's award, whether or not they participated in the binding arbitration.

C. In the event the *Owner* refers a dispute to binding arbitration, the parties to the arbitration shall exchange brief statements of their respective positions on the dispute, together with the relevant documents, and submit to a binding arbitration hearing which shall last no longer than two days, subject to the discretion of the arbitrator to increase such time. The parties further agree that there shall be no appeal from the arbitrator's award.

D. This Article is not intended to form part of any "bid contract" that may come into being between a bidder and any prospective *Subcontractor* or *Supplier* of that bidder.

**END OF INSTRUCTIONS TO BIDDERS**

This page intentionally left blank.

# SECTION 00 41 00
## BID FORM

**Name of *Contractor***: ……

**Bid For:** ***Kingston Health Sciences Centre***
***HDH Jeanne Mance Level 0 MDR Phase 2 Infrastructure***
Kingston, Ontario.

**To:** Stacey Gregory
Director, Redevelopment & Planning
Kingston Health Sciences Centre - Hotel Dieu Hospital Site
Planning Office
24 Barrie Street,
2nd Floor, Room 17-213
Kingston ON K7L 3J6

We, the undersigned, having carefully examined the Bid Documents, visited the site, and taken into account all conditions affecting the *Work*, hereby offer to furnish all necessary labour, *Products* and *Construction Equipment* required to perform expeditiously, and complete in a satisfactory manner, the above mentioned *Project* in accordance with the Bid Documents, for the Stipulated Sum of

……

…….dollars ($ …….)

We confirm that the above sum includes all applicable taxes, royalties, custom duties, overhead and profit, insurance premiums, permits, and all other charges at the date of this Bid, and is not subject to revisions due to changes in the cost of labour, materials or other items, but does not include any *Value Added Taxes*.

**1.1 VALUE ADDED TAXES**

The Stipulated Sum does not include *Value Added Taxes*.

**1.2 SUBCONTRACTS**

We list hereunder the names of the *Subcontractors* whose bids we have used in our Bid and with whom we intend to award subcontracts, if awarded the *Contract*. We acknowledge that no changes to the list will be made without the *Consultant*'s approval.

**1.3 TRADE NAME**

Demolition ……

Masonry ……

Metal Flashings ……

Gypsum Board, Framing ……

Acoustical Panel Ceiling, Suspension ……

Terrazzo Flooring ……

Painting / Elastomeric Coating ……

Sprinklers ……

Mechanical Prime ……

Electrical Prime ……

**1.4 VALIDITY OF THE BID**

Our bid will remain in good standing for a period of ninety (90) days after the closing date of general contract bids.

**1.5 COMPLETION OF THE WORK**

We understand the sequence of work as outlined in the Project Manual and undertake to complete the work within _____ weeks.

**1.6 ACCEPTANCE OF THE BID**

We recognize the right of the *Owner* not to accept the lowest or any other bid received.

**1.7 ALTERNATIVES**

We hereby submit for your consideration the following alternatives and understand that the *Owner* may reject any or all of these proposals:

| SPEC SECTION | ADD TO STIPULATED SUM | DEDUCT FROM STIPULATED SUM |
|---|---|---|
| _____ | _____ | _____ |
| _____ | _____ | _____ |
| _____ | _____ | _____ |

**1.8 ENCLOSURES**

We enclose herewith the following:

A. Letter of Consent from the Surety Company.

B. A Bid Bond made out in favour of the *Owner* in the amount of 10% of the Bid Price.

C. Undertaking of Insurance.

**1.9 ADDENDA**

We acknowledge receipt of the following addenda issued during the bidding period.

Addendum No. _____ dated _____.

Addendum No. _____ dated _____.

Addendum No. _____ dated _____.

Addendum No. _____ dated _____.

Addendum No. _____ dated _____.

**1.10 BID EVALUATION**

We understand that the Bid will be evaluated based on the Base Bid only and the below Identified prices are included in the Base Bid.

Dated at _____

This _____ Day of _____ 2023.

**Seal (If a Corporation)** …….

Signature of Bidder

**END OF BID FORM**

This page intentionally left blank.

# SECTION 00 73 00

SUPPLEMENTARY CONDITIONS

## AMENDMENTS TO THE STIPULATED PRICE CONTRACT, CCDC2-2020

The Standard Construction Document for Stipulated *Price the Contract,* English version, consisting of the Agreement Between *the Owner* and the *Contractor*, Definitions, and General Conditions of the Stipulated *Price the Contract*, Parts 1 to 13 inclusive, governing same is hereby made part of these *the Contract Documents*, with the following amendments, additions and modifications:

## PART 1 - AGREEMENT BETWEEN OWNER AND CONTRACTOR

### 1.1 ARTICLE A-1 THE WORK

A. Delete paragraph 1.3 and replace it with the following:
"1.3 commence the *Work* by the _____ day of _____ in the year _____ and, subject to adjustment in the *Contract Time* as provided for in the *Contract Documents* attain *Ready-for Takeover,* by the *Scheduled Ready-to-Takeover Date;* and attain the *Total Completion of the Work* by the *Scheduled Total Completion Date. (Refer to Section 00 21 13, Instruction to Bidders Item 1.2 B)*

### 1.2 ARTICLE A-5 – PAYMENT

A. Amend paragraph 5.1.3, in the first line, by deleting the words "the issuance of the" and replacing them with "receipt of the *Consultant*'s".

B. Delete paragraph 5.2.1 and replace it with the following:
"Should either party fail to make payments as they become due under the terms of the *Contract* or in an award by arbitration or a court, interest shall also become due and payable on such unpaid amounts at 1% above the prime rate. Such interest shall be compounded on a monthly basis. The prime rate shall be the rate of interest quoted by Bank of Canada for prime business loans as it may change from time to time."

C. Amend paragraph 5.2.1(1) by deleting "for the first 60 days".

D. Delete paragraph 5.2.1(2) and replace it with "Intentionally deleted".

### 1.3 ARTICLE A-6 – RECEIPT AND ADDRESSES FOR NOTICES IN WRITING

A. Delete paragraph 6.1 and replace it with the following:
"*Notices in Writing* between the parties or between them and the *Consultant* shall be considered to have been received by the addressee on the date of receipt if delivered by hand or by commercial courier or if sent during normal business hours by fax and addressed as set out below. Such *Notices in Writing* will be deemed to be received by the addressee on the next business day if sent by fax after normal business hours or if sent by overnight commercial courier. Such *Notices in Writing* will be deemed to be received by the addressee on the fifth *Working Day* following the date of mailing, if sent by pre-paid registered post, when addressed as set out below. An address for a party may be changed by *Notice in Writing* to the other party setting out the new address in accordance with this Article."

### 1.4 ARTICLE A-8 – SUCCESSION

A. Amend paragraph 8.1 by inserting "permitted" before "assigns".

### 1.5 ARTICLE A-9 TIME OF THE ESSENCE

A. Add new Article A-9 as follows:

"9.1 The *Contractor* acknowledges and agrees that one of the reasons the *Contractor* was selected for the *Work* is the *Contractor's* representation and warranty that it will attain *Ready-for-Takeover* and the *Total Completion of the Work* by the dates set out in Article A-1, paragraph 1.3, and the *Contractor* acknowledges and agrees that they have been advised by the *Owner* that it is critical to the *Owner* that *Ready-for-Takeover* be achieved by the prescribed dates and that time is of the essence of this *Contract.*

9.2 No approval or consent of, or certification, inspection, review, comment, verification, confirmation, acknowledgement or audit by, any governmental authority, the *Owner*, or the *Consultant*, or anyone on their behalf, shall relieve the *Contractor* from performing or fulfilling any of its obligations under the *Contract*. Without limitation, whenever any drawings, plans, procedures, programs or other work product of the *Contractor* requires any review, inspection, comment or approval by any governmental authority, the *Owner*, or the *Consultant*, or anyone on their behalf, any such review, inspection, comment or approval shall not, in any way, reduce or modify any of the *Contractor's* obligations under the *Contract*.

9.3 If any part of the *Contract* or the application of such part to any party, person or circumstance shall, to any extent, be invalid or unenforceable, the remainder of the *Contract*, or the application of such part to any other party, person or circumstance, shall not be affected thereby and each provision of the *Contract* shall be valid and enforceable to the fullest extent permitted by law.

9.4 The terms of the *Contract*, which by their nature are continuing, shall survive the termination or other expiration of the *Contract*.

9.5 This Agreement, including the *Contract Documents* described herein and the attachments, documents and other agreements to be furnished or executed in connection herewith, supersede all prior negotiations, representations or agreements, either written or oral, with respect to the subject matter hereof. No modification to the *Contract* shall be effective unless made in writing signed by both the *Owner* and the *Contractor*, unless otherwise provided for herein.

9.6 This Agreement may be executed at different times and in counterparts, each of which when executed and delivered, including any counterpart executed by a Party and transmitted by email by way of pdf attachment or facsimile transmission, shall be deemed an original, but all of which together will constitute one and the same instrument binding upon the parties hereto, notwithstanding that all such parties may not have executed the same counterpart. Signature and delivery by any party of signature pages by an electronic signature service shall be as binding an execution and delivery of this Agreement by such party as if the party had delivered an actual physical original of this Agreement with an ink signature from such party."

## PART 2 - DEFINITIONS

### 2.1 AMEND DEFINITION OF, "*CONSULTANT*", BY ADDING THE FOLLOWING TO THE END OF THAT DEFINITION:

A. "For purposes of the *Contract*, the terms "*Consultant*", "Architect" and "Engineer" shall be considered synonymous."

### 2.2 ADD THE FOLLOWING NEW DEFINITIONS:

A. "'*Act*' means the *Construction Act* (Ontario), RSO 1990, c C.30."

B. *"'Commissioning'* means the process of putting the *Work* or any part thereof into operation and includes Start-Up, Verification and Performance Testing as described in the *Contract* Documents."

C. *"'COVID-19'* means the novel coronavirus infectious disease SARS-CoV-2 as referenced by the World Health Organization, including all related viruses, diseases, or variants, and any subsequent waves."

D. *"'Dispute'* has the meaning ascribed in GC 8.1.1."

E. "'*Environmental Programs*' means the environmental plans, programs, procedures and requirements of the *Owner*. The *Environmental Programs* incorporate *the Owner's* infection control program including measures to suppress dust and noise and to avoid conditions likely to propagate mould or fungus of any kind."

F. "'*Key Personnel'* means the project managers, superintendents, coordinators or other personnel of the *Contractor*, if any, identified in Schedule "A" – Key Personnel to the *Contract*. Reference project manual section 01 11 00 and Schedule "A" submittal.

G. "'*OHSA*' means the *Occupational Health and Safety Act* (Ontario), RSO 1990, c O.1, as amended, and all regulations passed thereunder."

H. "'*Scheduled Ready-for-Takeover Date'* means ***August 31st, 2023***."

I. "'*Scheduled Total Completion Date*' means ***September 29, 2023***."

**J.** "'*Submittals*' are documents, items or other forms of information required by the *Contract Documents* to be provided by the *Contractor to* the *Owner or the Consultant*, and include, without limitation: (a) *Shop Drawings*, samples, models, mock-ups to indicate details or characteristics, before the portion of the *Work* that they represent can be fabricated and incorporated into the *Work*; and (b) *Record Drawings*, manuals and other close-out documentation to provide instructions for the operation and maintenance of the *Work*".

K. "'*Total Completion of the Work'* means the date that the *Work* is fully complete as prescribed by the *Contract Documents*, including, without limitation, the rectification of all defects and deficiencies."

L. "'*WSIB*' means the *Work*place Safety & Insurance Board."

## PART 3 - GENERAL CONDITIONS OF THE STIPULATED PRICE CONTRACT

Where a General Condition or paragraph of the General Conditions of the Stipulated Price Contract is deleted by these Supplementary Conditions, the numbering of the remaining General Conditions or paragraphs shall remain unchanged, and the numbering of the deleted item will be retained, unused.

### 3.1 GC 1.1 - CONTRACT DOCUMENTS

A. Amend paragraph 1.1.3 by inserting "Applying the standard of care described in paragraph 1.5.1.1 of GC 1.5 – PROJECT REQUIREMENTS," at the beginning of the first sentence.

B. Amend paragraph 1.1.4 by inserting "Except for its obligations to review under GC 1.1.3 and to report under this GC 1.1.4," at the beginning of the first sentence and by adding "Neither the *Owner* nor the *Consultant* will be responsible for oral instructions." after the second sentence.

C. Amend paragraph 1.1.5.1 by moving the reference to "Supplementary Conditions" to the top of the order of priority.

D. Delete subparagraph 1.1.5.5 in its entirety and substitute new subparagraph 1.1.5.5 as follows:
"In case of discrepancies, noted materials and annotations shall take precedence over graphic indications in the *Contract Documents*."

E. Add the following as paragraph 1.1.6.3:
"The S*pecifications* are divided into divisions and sections for convenience but shall be read as a whole and neither such division nor anything else contained in the *Contract Documents* will be construed to place responsibility on the *Consultant* to settle disputes among the *Subcontractors* and *Suppliers* in respect to such divisions. The *Drawings* are, in part, diagrammatic and are intended to convey the scope of the *Work* and indicate general and appropriate locations, arrangement and sizes of fixtures, equipment and outlets. The *Contractor* shall obtain more accurate information about the locations, arrangement and sizes from study and coordination of the *Drawings*, including *Shop Drawings* and shall become familiar with conditions and spaces affecting these matters before proceeding with the *Work*. Where site conditions require reasonable minor changes in indicated locations and arrangements, the *Contractor* shall make such changes at no additional cost to the *Owner*. Similarly, where known conditions or existing conditions interfere with new installation and require relocation, the *Contractor* shall include such relocation in the *Work*. The *Contractor* shall arrange and install fixtures and equipment in such a way as to conserve as much headroom and space as possible. The schedules are that portion of the *Contract Documents* wherever located and whenever issued, compiling information of similar content and may consist of *Drawings*, tables and/or lists."

F. Delete paragraph 1.1.8 in its entirety and substitute new paragraph 1.1.8:
"1.1.8 The *Owner* shall provide the *Contractor*, without charge, up to six copies of the *Contract Documents* if requested in writing."

G. Amend paragraph 1.1.9 by adding the following to the end of the paragraph:

"The *Specifications* may be divided into Divisions and the Divisions into Sections for the purpose of convenience, but a Section may consist of work of more than one *Subcontractor* or *Supplier*. The *Specifications* are intended to be read as a whole."

H. Delete paragraph 1.1.10 in its entirety and substitute new paragraph 1.1.10 as follows:

"1.1.10 The design information furnished to the *Contractor* as part of the *Contract Documents*, including the *Drawings* and *Specifications*, are the property of the *Owner* and/or the *Consultant*, and are to be used by the *Contractor* only for the purposes of performing the *Work*. The *Contractor* shall not copy, alter or utilize the aforesaid design information for any purpose unrelated to the *Work* without written authorization from the *Owner* and the *Consultant*."

I. Add new paragraph 1.1.12 as follows:

"1.1.12 The table of contents, titles, section headings, running headlines and marginal notes contained in the *Contract Documents* are solely to facilitate reference to various provisions of the *Contract Documents* and in no way affect or limit the interpretation or construction of the provisions to which they refer."

**3.2 GC 1.4 ASSIGNMENT**

A. Delete paragraph 1.4.1 in its entirety and substitute new paragraph 1.4.1 as follows:

"1.4.1 The *Contractor* shall not assign the *Contract* or any of its rights or interest in the *Contract*, nor shall the *Contractor* assign or subcontract all or substantially all of the *Work* or the *Contractor's* responsibilities under the *Contract* to a single *Subcontractor* or any other person, without the prior written consent of the *Owner*, which consent may not be unreasonably withheld. The *Owner* may assign the *Contract* without the consent of the *Contractor* upon providing *Notice in Writing* to the *Contractor*. "

**3.3 GC 1.5 PROJECT REQUIREMENTS**

A. Add new paragraph 1.5.1 as follows:

"1.5.1 The *Contractor* represents, covenants and warrants to the *Owner* that:

.1 it has the necessary high degree of experience and expertise required to perform the *Work* and it will in the performance of the *Work* exercise a standard of care, skill and diligence that would normally be provided by an experienced and prudent contractor providing similar services for hospital projects of a similar nature, and the *Contractor* shall exercise the same standard of due care and diligence in respect of any *Products*, personnel, or procedures which it may recommend to the *Owner*;

.2 the personnel it assigns to the *Project* are experienced and it has a sufficient staff of qualified and competent personnel to replace its designated *the Contract* personnel referred to in GC 3.5, subject to the *Owner's* approval, in the event of death, incapacity, termination or resignation;

.3 there are no pending, threatened or anticipated claims or litigation involving the *Contractor* that would have a material adverse effect on the financial ability of the *Contractor* to perform the *Work*, and

.4 it will achieve *Ready-for-Takeover* and the *Total Completion Date* by the date set out in Article A-1, paragraph 1.3."

**3.4 GC 2.2 - ROLE OF THE CONSULTANT**

A. Amend paragraph 2.2.3 by adding the following to the end of that paragraph:

"The presence of such project representatives at the *Place of the Work* or the *Work* shall not relieve the *Contractor* from any responsibility to perform the *Work* as required by the *Contract* Documents."

B. Amend paragraph 2.2.5 by: (a) adding the word ", schedules" after the word "techniques"; (b) adding the words "to the *Contractor*" after the words "the *Consultant* will not be responsible" in the first sentence, (c) adding to the following to the end of the second sentence "or to adhere to the construction schedule", and (d) adding the following sentence to the end of the paragraph: "the *Consultant* will not have control over, charge of or be responsible for the acts or omissions of the *Contractor*, *Subcontractors*, *Suppliers*, or their agents, employees, or any other person performing any portion of the *Work*.

C. Amend paragraph 2.2.6 by deleting the words "Except with respect to GC 5.1 – FINANCING INFORMATION REQUIRED OF THE OWNER" and capitalizing "the".

D. Amend paragraph 2.2.7 by adding "the *Contractor* or *the Owner* on its own behalf or on behalf of" after the word "by" in the second line.

E. Amend paragraph 2.2.12 by: (a) deleting the word "will" and replacing it with the word "may"; and (b) adding the following to the end of that paragraph:
"The *Contractor* shall be responsible for requesting any additional instructions or clarifications that may be required from the *Consultant* which are needed for the performance of the *Work*, and shall request such instructions or clarifications in time to avoid any delay or additional cost of the *Work*. If, in the opinion of the *Contractor*, the *Supplemental Instruction* involves an adjustment in the *Contract Price* or the *Contract Time*, the *Contractor* shall, within ten (10) *Working Day*s of receipt of a *Supplemental Instruction* provide the *Consultant* with a written notice to that effect. In the event that the *Contractor* needs additional information to determine whether a *Supplemental Instruction* involves an adjustment of the *Contract Price* or the *Contract Time*, the *Contractor* may issue a written request to the *Consultant* seeking such additional information. The *Contractor* shall, within ten (10) *Working Day*s of receipt of such additional information, provide the *Consultant* with a written notice if, in the opinion of the *Contractor*, the *Supplemental Instruction* involves an adjustment in the *Contract Price* or the *Contract Time*. Failure to provide written notification within the time stipulated in this paragraph 2.2.12 shall be deemed an acceptance of the *Supplemental Instruction* by the *Contractor* without adjustment in the *Contract Price* or the *Contract Time*."

F. Amend paragraph 2.2.13 by deleting the word "submittals" and replacing it with "*Submittals*".

G. Amend paragraph 2.2.18 by deleting the words "immediately engage a *Consultant* against whom the *Contractor* makes no reasonable objection and" and replace it with "engage a *Consultant"*.

H. Add new paragraph 2.2.19 as follows:
"2.2.19 Neither the *Contractor* nor any *Subcontractor*, *Supplier* or other third party shall have any claim against the *Consultant* as a result of the performance or non-performance of the *Consultant*'s services. The *Contractor* shall include this provision in any contracts it makes with its *Subcontractor*s, *Suppliers* and others and shall require such *Subcontractor*s, *Suppliers* and others to include the same term in their contracts with sub-subcontractors, sub-suppliers and others."

## 3.5 GC 2.3 – REVIEW AND INSPECTION OF THE WORK

A. Amend paragraph 2.3.2 by inserting in line 1 ", *Commissioning*" after "inspections," and inserting in line 3 "and *Commissioning*" after "inspection".

B. Amend paragraph 2.3.3 by inserting in line 1 ", *Commissioning*" after "certificates".

C. Amend paragraph 2.3.4 by inserting in line 2 "*Commissioning*" after "inspections," and inserting in line 3 "or *Commissioning*" after "tests".

D. Amend paragraph 2.3.5 by inserting "Subject to paragraph 2.3.4" at the beginning of the third sentence.

E. Amend paragraph 2.3.6 and paragraph 2.3.7 by inserting "or *Commissioning*" after "inspection" in all instances.

## 3.6 GC 2.4 - DEFECTIVE WORK

A. Amend paragraph 2.4.1 by: (a) adding the words "or the *Owner*" after "the *Consultant"* in the first line; and (b) by adding the following to the end of the paragraph:

"The *Contractor* shall rectify, in a manner acceptable to the *Owner* and the *Consultant*, all defective work and deficiencies throughout the *Work*, whether or not they are specifically identified by the *Consultant*."

B. Amend paragraph 2.4.3 by deleting the words "the difference in value between the work as performed and that called for by the *Contract Documents*" and inserting the words "the value of such work as is necessary to correct any non-compliance with the *Contract Documents*."

C. Add new paragraphs 2.4.4, 2.4.5, and 2.4.6 as follows:

"2.4.4 The *Contractor* shall prioritize the correction of any defective work which, in the sole discretion of the *Owner*, adversely affects the day to day operation of the *Owner*.

2.4.5 Upon notification of a defect in the *Work*, the *Contractor* shall promptly, and no later than five (5) *Working Days*, provide a written statement outlining the proposed remedial measures and a schedule for implementation. Once approved by the *Consultant*, the *Contractor* shall proceed with the remedial measures without adversely affecting the construction schedule.

2.4.6 Notwithstanding any rejection of the *Work* by the *Consultant* or *the Owner*, or the deduction of an amount otherwise due to the *Contractor* by the *Owner* as a result of defective work, the *Contractor* is required to continue the *Work* in accordance with the *Contract Documents*."

**3.7 GC 3.1 - CONTROL OF THE WORK**

A. Amend paragraph 3.1.1 by inserting the words "schedule, coordinate and" after the word "effectively".

B. Amend paragraph 3.1.2 by adding the word ", schedules" after the word "techniques" and by adding the following to the end of the sentence: "and shall coordinate the *Work* so as not to interfere with, interrupt, obstruct, delay, or otherwise affect, the work of others".

C. Add new paragraph 3.1.3:
"3.1.3 Prior to commencing individual procurement, fabrication and construction activities, the *Contractor* shall verify, at the *Place of the Work*, all relevant measurements and levels necessary for proper and complete fabrication, assembly and installation of the *Work* and shall further carefully compare such field measurements and conditions with the requirements of the *Contract Documents*. Where dimensions are not included or exact locations are not apparent, the *Contractor* shall immediately notify the *Consultant* in writing and obtain written instructions from the *Consultant* before proceeding with any part of the affected *Work*."

**3.8 GC 3.2 - CONSTRUCTION BY THE OWNER OR OTHER CONTRACTORS**

A. Delete subparagraphs 3.2.2.1 and 3.2.2.2 in their entirety.

B. Amend paragraph 3.2.3.2 by adding the following to the end of that paragraph:
", and for *Other Contractors* or the *Owner's* own forces, the *Contractor* shall assume overall responsibility for compliance with *OHSA* and all other aspects of the applicable health and safety legislation of the *Place of the Work*, including the responsibilities of the "constructor" under *OHSA*."

C. Amend paragraph 3.2.3.4 by adding the following to the end of that paragraph:
"Failure by the *Contractor* to so report shall invalidate any claims against the *Owner* by reason of the deficiencies in the work of *Other Contractors* or the *Owner's* own forces except for those deficiencies not then reasonably discoverable;"

D. Add new subparagraph 3.2.3.5:
"Subject to GC 9.4 CONSTRUCTION SAFETY, for the *Owner's* own forces and for the *Other Contractors*, assume overall responsibility for compliance with all aspects of the applicable health and safety legislation in the *Place of the Work*, including all of the responsibilities of the constructor under the *OHSA."*

E. Delete the last sentence of paragraph 3.2.5.

F. Delete paragraph 3.2.6 in its entirety and substitute the following:

"3.2.6 Entry by the *Owner*, the *Owner's* forces and/or by *Other Contractors* does not indicate acceptance of the *Work* and does not relieve the *Contractor* of any responsibility under the *Contract* including the responsibility to complete the *Work*."

G. Add new paragraph 3.2.7 as follows:

"3.2.7 Placing, installing, application and connection of work by the *Owner, the Owner's* own forces, and/or by *Other Contractors*, on and to the *Work* will not relieve the *Contractor's* responsibility to provide and maintain the specified warranties unless a defect has been created by the *Owner, the Owner's* own forces or *Other Contractors*."

3.9 **GC 3.3 - TEMPORARY WORK**

A. Add new paragraph 3.3.4 as follows:

"3.3.4 Temporary or trial usage of any mechanical device, machinery, apparatus, equipment or materials shall not be construed as evidence of acceptance of the same and no claim for damage shall be made by the *Contractor* for damage to or breaking of any part of such work which may be used."

3.10 **GC 3.4 - CONSTRUCTION SCHEDULE**

A. Delete paragraph 3.4.1 and replace it with the following new paragraph 3.4.1 as follows:

"3.4.1 The *Contractor* shall:

.1 unless it is required to be submitted earlier in accordance with the *Specifications*, then prior to site mobilization, submit to the *Owner* and the *Consultant* for their review and acceptance a construction schedule, indicating the critical milestone dates for the *Project* using a scheduling program which is approved by the *Consultant*, acting reasonably, to demonstrate that the *Work* will be performed in conformity with the *Contract Time* and the *Contract Documents*. The *Contractor* shall provide the schedule information required by this paragraph 3.5.1.1 in both electronic format and hard copy. Once accepted by the *Owner* and the *Consultant*, the construction schedule submitted by the *Contractor* shall become the baseline construction schedule;

.2 provide the necessary expertise and resources, including, without limitation, manpower and *Construction Equipment*, as are necessary to maintain progress under the accepted baseline construction schedule referred to in paragraph 3.4.1.1 or any successor or revised schedule accepted by the *Owner*;

.3 monitor the progress of the *Work* on a weekly basis relative to the construction schedule, reviewed and accepted pursuant to paragraph 3.4.1.1, or any successor or revised schedule accepted in writing by the *Owner* pursuant to GC 3.4, update the construction schedule on a monthly basis, and advise the *Consultant* and the *Owner* by *Notice in Writing* of any variation from or slippage in the baseline construction schedule or any other schedule; and

.4 if after applying the expertise and resources required under paragraph 3.4.1.2, the *Contractor* forms the opinion that the slippage in the construction schedule or any other schedule, reported in paragraph 3.4.1.3, cannot be recovered by the *Contractor*, it shall, in the same notice provided under paragraph 3.4.1.3, indicate to the *Consultant* if the *Contractor* intends to apply for an extension of the *Contract Time*."

B. Add a new paragraph 3.4.2 as follows:

"3.4.2 Without limiting the other obligations of the *Contractor* under GC 3.4, the *Contractor* shall not amend the construction schedule without the prior written consent of the *Owner*. In addition, at each site construction meeting, the *Contractor* shall provide to the *Owner* and the *Consultant* a two (2) week look-ahead schedule indicating the major activities to be undertaken or constructed in such two (2) week period."

C. Add new paragraph 3.4.3:

"3.4.3 If at any time it should appear to the *Owner* or the *Consultant* that the actual progress of the *Work* is behind schedule or is likely to become behind schedule, based on critical path methodology, or if the *Contractor* has given notice of such to the *Owner* or the *Consultant* pursuant to 3.4.1.3, the *Contractor* shall take appropriate steps to cause the actual progress of the *Work* to conform to the schedule and shall produce and present to the *Owner* and the *Consultant* a recovery plan demonstrating how the *Contractor* will achieve the recovery of the schedule. The *Owner* may instruct the *Contractor*, at the *Contractor*'s expense, to employ additional labour and equipment or work overtime or employ any other reasonable procedures, at no expense to the *Owner*, to bring the *Work* back to conform with the schedule."

**3.11 GC 3.5 - SUPERVISION**

A. Delete paragraph 3.5.1 in its entirety and substitute new paragraph 3.5.1:

"3.5.1 The *Contractor* shall provide all necessary supervision and appoint competent representatives who shall be in attendance at the *Place of the Work* while *Work* is being performed. The appointed

representatives shall not be changed except for valid reasons, and upon the *Contractor* obtaining the *Owner's* written consent, which consent shall not be unreasonably withheld."

B. Add new paragraphs 3.5.3, 3.5.4, 3.5.5, and 3.5.6 as follows:

"3.5.3 The *Contractor* shall employ competent *Key Personnel* who will not be removed or replaced during the course of the *Work* without the prior written consent of the *Owner*, which approval shall not be unreasonably withheld.

3.5.4 The *Contractor*'s site supervisor for the *Contract* shall devote their full time during working hours to the *Project* and remain at the *Place of the Work* until a final certificate of payment has been issued by the *Consultant* and all deficiencies in the *Work* have been rectified to the satisfaction of the *Owner*. The full-time site supervisor for the *Contract* shall be named in the Schedule "A" – Key Personnel and any acceptable replacement shall represent the *Contractor* at the *Place of the Work* and notices and instructions given to the site supervisor for the *Contract* by the *Consultant* shall be held to have been received by the *Contractor*.

3.5.5 The *Owner* acting reasonably, shall have the right to give written notice to the *Contractor* who shall, within seven (7) days of receipt of the written notice, at the *Contractor's* sole expense, remove from the *Project* any representative or employee of the *Contractor*, *Subcontractors* or *Suppliers* who, in the opinion of the *Owner* are unacceptable or a detriment to the *Project*. The *Contractor* shall not be entitled to receive any compensation or extension of the *Contract Time* in connection with such removal.

3.5.6 The supervisor appointed by the *Contractor* shall demonstrate competency in both spoken and written English."

## 3.12 GC 3.6 - SUBCONTRACTORS AND SUPPLIERS

A. Delete paragraph 3.6.2 in its entirety and substitute new paragraph 3.6.2:

"3.6.2 The *Contractor* agrees not to change *Subcontractors* without prior written approval of the *Owner*, which approval will not be unreasonably withheld. Where the *Contractor* wishes to change any identified *Subcontractors* or *Suppliers*, the *Contractor* shall set out in writing to the *Owner* sufficient reasons for the desired change. The *Owner* or *Consultant* shall advise the *Contractor* if the *Owner* agrees to the proposed change. If the *Owner* is not satisfied with the *Contractor's* reason for wanting to change an identified *Subcontractor* or *Supplier*, the *Contractor* shall be required to proceed with the identified *Subcontractor* or *Supplier.*"

B. Amend 3.6.4 by inserting the following at the end of the paragraph:

"unless the request to change a proposed *Subcontractor* or *Supplier* is a result of issues with the ability of the *Subcontractor* or *Supplier* to complete the *Work* in a proper manner, in which case the *Contractor* will not be entitled to any change in the *Contract Price* or *the Contract Time*".

C. Add a new paragraph 3.6.7 as follows:

"3.6.7 The *Owner* may assign to the *Contractor*, and the *Contractor* agrees to accept, any contract procured by the *Owner* for work or services or *Products* required on the *Project* that has been pre-tendered or pre-negotiated by the *Owner*, where the *Owner* has identified, before bid close, the contract or contracts that are to be assigned to the *Contractor*."

## 3.13 GC 3.7 - LABOUR AND PRODUCTS

A. Amend paragraph 3.7.1 by: (a) adding the words "agents, *Subcontractor*s and *Suppliers*" after the word "employees"; and (b) adding the following three new sentences to the end of that paragraph:

"Without in any way limiting the generality of the foregoing, the *Contractor* shall prepare and implement the job site rules more particularly described in the *Contract Documents*. If no job site rules are described in the *Contract Documents*, the *Contractor* shall draft job site rules for the review and approval of the *Owner*. Any such job site rules prepared by the *Contractor* shall be consistent with the *Contractor*'s duties and obligations under the *OHSA* and shall also include provisions making smoking and the consumption of alcohol or non-prescription drugs on the *Project* site the subject of discipline proceedings and/or termination of employment."

B. Amend paragraph 3.7.2 by adding the following sentence at the end of that paragraph:

"The *Contractor* represents and warrants that the *Products* provided in accordance with the *Contract Documents* are not subject to any conditional sales contracts and are not subject to any security rights

claimed or obtained by any third party which may subject any of the *Products* to seizure and/or removal from the *Place of the Work*."

C. Delete paragraph 3.7.3 and replace it with the following:

"3.7.3 *Products* provided shall be new and shall conform to all current applicable specifications of the Canadian Standards Association, Canadian Standards Board or General Standards Board, ASTM, National Building Code, Ontario Building Code and all governmental authorities having jurisdiction at the *Place of the Work*, unless otherwise specified. *Products* which are not specified shall be of a quality consistent with those specified and their use acceptable to the *Consultant*. *Products* brought on to the *Place of the Work* by the *Contractor* shall be deemed to be the property of the *Owner*, but the *Owner* shall be under no liability for loss thereof or damage thereto arising from any cause whatsoever, and such *Products* shall be at the sole risk of the *Contractor*."

D. Add new paragraphs 3.7.4, 3.7.5 and 3.7.6 as follows:

"3.74 The *Contractor* is responsible for the safe on-site storage of *Products* and their protection (including *Products* supplied by the *Owner* and *Other Contractors* to be installed under the *Contract*) in such ways as to avoid dangerous conditions or contamination to the *Products* or other persons or property and in locations at the *Place of the Work* to the satisfaction of the *Owner* and the *Consultant*. The *Owner* shall provide all relevant information on the *Products* to be supplied by the *Owner*.

3.7.5 The *Contractor* shall not employ any persons on the *Work* whose labour affiliation, or lack thereof, is incompatible with other labour employed in connection with the *Work*. Any costs arising from labour disputes as a result of the employment of any such person by the *Contractor*, its *Subcontractor*s or *Suppliers*, shall be the sole expense of the *Contractor*.

"3.7.6 The *Contractor* shall cooperate with the *Owner* and its representatives and shall take all reasonable and necessary actions to maintain stable and harmonious labour relations with respect to the work at the *Place of the Work*, including cooperation to attempt to avoid work stoppages, trade union jurisdictional disputes, and other labour disputes."

**3.14 GC 3.8 - SHOP DRAWINGS**

A. Add the words "AND OTHER SUBMITTALS" to the title of GC 3.8 after "SHOP DRAWINGS".

B. Add "and *Submittals*" after the words "*Shop Drawings*" in clauses 3.8.1, 3.8.2, 3.8.3, 3.8.3.2, 3.8.5, and 3.8.6.

C. Delete paragraph 3.8.3 in its entirety and substitute new paragraph 3.8.3:

"3.8.3 Prior to the first application for payment, the *Contractor* and the *Consultant* shall jointly prepare a schedule of the dates for submission and return of *Shop Drawings* and any *Submittals*, and that:"

D. Delete subparagraph 3.8.3.1 in its entirety and substitute new subparagraph 3.8.3.1:

"the *Contractor* has determined and correlated the field measurements with the *Shop Drawings* and any *Submittals* and field construction conditions, *Product* requirements, catalogue numbers and similar data, or will do so if not possible at that time, and"

E. Delete paragraph 3.8.7 in its entirety and substitute new paragraph 3.8.7:

"3.8.7 The *Consultant* will review and return *Shop Drawings* and *Submittals* in accordance with the schedule agreed upon in paragraph 3.8.2, or, in the absence of such schedule, within fifteen (15) *Working Days*. If, for any reason, the *Consultant* cannot process the *Shop Drawings* and *Submittals* within the agreed-upon schedule or with reasonable promptness, the *Consultant* shall notify the *Contractor* and they shall meet to review and arrive at an acceptable revised schedule for processing. The *Contractor* shall update the *Shop Drawings* and *Submittals* schedule to correspond to changes in the construction schedule. Changes in the *Contract Price* or *the Contract Time* may be made only as provided in the *Contract*."

3.15 **GC 3.9 - DOCUMENTS AT THE SITE**

A. Add a new GC 3.9 DOCUMENTS AT THE PLACE OF THE WORK as follows:

"GC 3.9 DOCUMENTS AT THE PLACE OF THE WORK

3.9 The *Contractor* shall keep one copy of the current the *Contract Documents, Supplemental Instructions, Contemplated Change Orders, Change Orders, Change Directives*, reviewed *Shop*

*Drawings*, *Submittals*, reports and records of meetings at the *Place of the Work*, in good order and available to the *Owner* and the *Consultant*."

3.16 **GC 3.10 - CLEAN UP**

A. Add a new GC 3.10 CLEAN UP as follows:

"GC 3.10 CLEAN UP

3.10.1 The *Contractor* shall maintain the *Work* and *Place of the Work* in a safe and tidy condition and free from the accumulation of waste products and debris, other than that caused by the *Owner*, *Other Contractors*, or their employees.

3.10.2 Before applying for *Substantial Performance of the Work* as provided in GC 5.4 – SUBSTANTIAL PERFORMANCE OF THE WORK AND PAYMENT OF HOLDBACK, the *Contractor* shall remove waste products and debris, other than that resulting from the work of the *Owner*, *Other Contractors*, or their employees, and shall leave the *Place of the Work* clean and suitable for use or occupancy by the *Owner*. The *Contractor* shall remove products, tools, *Construction Equipment*, and *Temporary Work* not required for the performance of the remaining work.

3.10.3 Prior to application for the final payment, the *Contractor* shall remove any remaining products, tools, *Construction Equipment*, *Temporary Work*, and waste products and debris, other than those resulting from the work of the *Owner*, *Other Contractors*, or their employees."

**3.17 GC 3.11 - USE OF THE WORK**

A. Add new GC 3.11 USE OF THE WORK as follows:

"GC 3.11 USE OF THE WORK

3.11.1 The *Contractor* shall confine *Construction Equipment*, *Temporary Work*, storage of *Products*, waste products and debris, and operations of employees and *Subcontractors* to limits indicated by laws, ordinances, permits, or the *Contract Documents* and shall not unreasonably encumber the *Place of the Work*.

3.11.2 The *Contractor* shall not load or permit to be loaded any part of the *Work* with a weight or force that will endanger the safety of the *Work*.

3.11.3 Except for those normally used during the performance of the *Work*, such as elevator, mechanical, electrical, hydro, the *Contractor* shall not use any service plant or equipment installed as part of the *Work* without prior written consent from *the Owner*. On receipt of such consent, the *Contractor* shall be subject to any conditions set out as part of such consent and shall be responsible for all costs, damage and compensation for wear and tear.

3.11.4 If storage or other areas are required for the *Work* in addition to the *Work Site*, the *Contractor* shall be responsible for making arrangements to obtain the additional areas and obtaining any necessary permits, permission or authorization and, if required, for making permit, rental or other payments that may be required for such purpose."

**3.18 GC 3.12 – CONTRACTOR'S USE OF PERMANENT EQUIPMENT OR SYSTEMS**

A. Add a new GC 3.12 as follows:

"GC 3.12 CONTRACTOR'S USE OF PERMANENT EQUIPMENT OR SYSTEMS

3.12.1 With the prior written approval of the *Owner*, the *Contractor* may make use of elements of the mechanical and electrical systems or equipment comprising a permanent part of the *Work* for the purpose of providing heat or power to the *Project* during the final stages of construction. In such event, and before the issuance of the certificate of *Substantial Performance of the Work*, the *Contractor* shall clean and make good, to the satisfaction of the *Consultant*, such systems and equipment as it had been permitted to use. The *Contractor* shall pay any and all costs associated with such use, cleaning and making good.

3.12.2 Where the *Contractor* has made use of elements of the mechanical and electrical systems or equipment comprising a permanent part of the *Work*, as described in paragraph 3.12.1 above, the *Contractor* shall obtain, from the manufacturer or *Supplier* of the systems or equipment used, a

confirmation from such manufacturer or *Supplier* that the warranty on such systems or equipment begins on the date of *Substantial Performance of the Work* and is not impaired in scope or reduced in time by virtue of the *Contractor*'s use of such systems or equipment."

**3.19 GC 4.1 - CASH ALLOWANCES**

A. Delete paragraph 4.1.4 in its entirety and substitute new paragraph 4.1.4:

"4.1.4 Any surpluses in one or more cash allowance may at the election of the *Owner* be expended pursuant to paragraph 4.1.3 in respect of other cash allowances or to fund changes in the *Work* by way of *Change Order* or *Change Directive*, as the case may be, but without the imposition of Overhead or profit in respect *Work* pertaining to such other cash allowances or changes."

B. Delete paragraph 4.1.5 in its entirety and substitute new paragraph 4.1.5:

"4.1.5 Where the value of the *Work* under cash allowances exceeds the aggregate amount of all the cash allowances stated in the *Contract Documents*, the *Contractor* shall be compensated for the approved amount of such excess and for *Overhead* and profit on such approved amount, with the *Contract Price* being adjusted to reflect such excess, all pursuant to and only to the extent permitted under, GC 6.1 – CHANGES, 6.2 – CHANGE ORDER and GC 6.3 – CHANGE DIRECTIVE."

C. Delete paragraph 4.1.7 in its entirety and substitute new paragraph 4.1.7:

"4.1.7 The *Contractor* shall provide a schedule prior to the first application for progress payment that shows when the items called for under cash allowances must be ordered to avoid delaying the progress of the *Work*."

D. Add new paragraph 4.1.8:

"4.1.8 The *Owner* reserves the right to call, or to have the *Contractor* call, competitive bids for portions of the *Work*, to be paid for from cash allowances. If the *Owner* determines to proceed with competitive bids, the *Contractor* shall comply with the directions of the *Owner*."

**3.20 GC 5.1 - FINANCING INFORMATION REQUIRED OF THE OWNER**

A. Amend the heading, "GC 5.1 FINANCING INFORMATION REQUIRED OF THE OWNER" to read, "GC 5.1 FINANCING INFORMATION REQUIRED".

B. Delete paragraph 5.1.1 in its entirety and substitute new paragraph 5.1.1:

"5.1.1 The *Contractor* shall provide the *Owner* with timely *Notice in Writing* of any material change in its financial ability to (a) properly complete the *Work* in accordance with the *Contract Documents* or (b) fulfil its obligations under the *Contract*."

C. Delete paragraph 5.1.2 in its entirety and substitute the following: "Intentionally deleted".

**3.21 GC 5.2 - APPLICATIONS FOR PAYMENT**

A. Amend paragraph 5.2.2 by adding the following sentence to the end of that paragraph:
"Applications for payment shall be made in a form that is mutually acceptable to the *Owner* and the *Contractor*, and shall include, as a separate line item, the applicable *Value Added Taxes* payable on that application."

B. Amend paragraph 5.2.3 by: (a) deleting the word "delivered" and replacing it with the words "incorporated into"; and (b) adding the following to the end of that paragraph:
"No amount claimed shall include *Products* incorporated into to the *Place of the Work* unless the *Products* are free and clear of all security interests, liens, and other claims of third parties."

C. Add to the end of paragraph 5.2.8 the following new sentence:
"Any *Products* delivered to the *Place of the Work* but not yet incorporated into the *Work* shall remain at the risk of the *Contractor* until *Ready-for-Takeover* notwithstanding that title has passed to the *Owner* pursuant to GC 13.1 OWNERSHIP OF MATERIALS."

D. Add new paragraph 5.2.9:

"5.2.9 The *Contractor* shall submit, with each application for payment, as true conditions precedent to the *Contractor's* right to payment under this *Contract*:

.1 after the first payment, a Statutory Declaration, on an original form of CCDC Document 9A-2001, stating that payments in connection with the *Work*, as noted in the Statutory Declaration, have been made to the end of the period immediately preceding that covered by the current application."

.2 evidence of compliance with workers' compensation legislation at the *Place of the Work*, including a WSIB Clearance Certificate, with each application for progress payment.

.3 if the application is for payment of the lien holdback amount, a written request for release of holdback including a declaration that no written notices of lien have been received by the *Contractor*."

E. Add new paragraph 5.2. 10:

"5.2.10 The *Contractor* shall prepare and maintain current as-built Drawings which shall consist of the Drawings and Specifications revised by the *Contractor* during the *Work*, showing changes to the Drawings and Specifications, which current as-built Drawings shall be maintained by the *Contractor* and made available to the *Consultant* for review with each application for progress payment. The *Consultant* reserves the right to retain a reasonable amount for the value of the as-built *Drawings* not presented for review."

**3.22 GC 5.3 - PAYMENT**

A. Add a new paragraph 5.3.2 as follows:

"5.3.2 If the *Contractor* fails to provide a statutory declaration as required by paragraph 5.2.8, or if the *Contractor* fails to demonstrate compliance with GC 10.4 – WORKERS' COMPENSATION, the *Owner* shall be entitled to deduct from amounts otherwise payable to the *Contractor* an amount sufficient to cover any liability which it might incur as a result of the *Contractor*'s failure to provide a statutory declaration or to demonstrate compliance with GC 10.4."

**3.23 GC 5.4 - SUBSTANTIAL PERFORMANCE OF THE WORK AND PAYMENT OF HOLDBACK**

A. Amend paragraph 5.4.1 by deleting the words "20 calendar days" in the second line and substituting the words "fifteen (15) *Work*ing Days" therefor, and by adding the following at the beginning of the paragraph:

"5.4.1 When the *Contractor* considers that the *Work* is substantially performed, or if permitted by the lien legislation applicable to the *Place of the Work* a designated portion thereof which the *Owner* agrees to accept separately is substantially performed, the *Contractor* shall, within one (1) *Working Day*, deliver to the *Consultant* and the *Owner* a written application for payment of the lien holdback amount, in accordance with GC 5.3, for review by the *Consultant* to establish *Substantial Performance of the Work* or substantial performance of the designated portion of the *Work*."

B. Delete paragraph 5.4.2 in its entirety and substitute the following: "Intentionally deleted".

C. Delete paragraph 5.4.3 in its entirety and substitute new paragraph 5.4.3:

"5.4.3 Subject to the terms and conditions of the *Contract*, the requirements of any *Payment Legislation*, and any Notice of Non-Payment of Holdback, the holdback amount authorized by the certificate for payment of the holdback shall be due and payable on the first (1st) *Working Day* following the expiration of the holdback period stipulated in the *Payment Legislation* applicable to the *Place of the Work*. The *Owner* may retain out of the holdback amount any sums required by law to satisfy any liens against the *Work* or, if permitted by the lien legislation applicable to the *Place of the Work*, other third party monetary claims against the *Contractor* which are enforceable against the *Owner*."

D. Amend paragraph 5.4.5 by deleting "hereby agrees to release, and shall release," and substituting "may agree to release".

E. Add new paragraph 5.4.7 as follows:

"5.4.4 The *Contractor* shall publish a copy of the Certificate of *Substantial Performance of the Work* within seven (7) days of receiving a copy of the Certificate of *Substantial Performance of the Work* signed by the *Consultant*, and the *Contractor* shall provide suitable evidence of the publication to the *Consultant* and *the Owner*. If the *Contractor* fails to publish such notice, the *Owner* shall be at liberty to publish and back charge the *Contractor* its reasonable costs for doing so."

**3.24 GC 5.5 – FINAL PAYMENT**

A. Delete paragraph 5.5.1 in its entirety and substitute new paragraph 5.5.1:

"5.5.1 When the *Contractor* considers that the *Work* is completed and satisfies the requirements of *Total Completion of the Work* and *Completion of Commissioning*, the *Contractor* shall submit an application for final payment. The *Contractor's* application for final payment shall be accompanied by any documents or materials not yet delivered as agreed to in writing by the *Owner* pursuant to paragraph 12.1.2 of GC 12.1 - READY-FOR-TAKEOVER together with fully complete as-built *Drawings.* Should the *Contractor* fail to deliver any of the said documents, or other documents required to be delivered pursuant to the *Contract Documents*, the *Owner* shall be at liberty to withhold from amounts otherwise payable to the *Contractor,* an amount, in the discretion of the *Owner,* up to the full amount otherwise payable to the *Contractor* as security for the obligation of the *Contractor* to deliver the undelivered documents."

B. Delete from the first line of paragraph 5.5.2 the words, "calendar days" and substitute the words "*Working Days*".

C. Delete paragraph 5.5.4 in its entirety and substitute new paragraph 5.5.4:

"5.5.4 Subject to the other requirements of the *Contract*, the unpaid balance of the *Contract Price* shall become payable to the *Contractor* on the tenth (10th) *Working Day* following the issuance of the *Consultant's* final certificate for payment, subject to the *Owner's* right to withhold payment from the unpaid balance of the *Contract Price* for any amounts required pursuant to GC 5.6 DEFERRED WORK, and any sums required to satisfy any lien or trust claims arising from the *Work*".

D. Add new paragraph 5.5.5:

"5.5.5 As additional preconditions for release of the final payment, the *Contractor* shall submit the following documentation:

.1 the *Contractor's* written request for release of final payment, including a declaration that no written notices of lien have been received by it.;

.2 the *Contractor's* Statutory Declaration CCDC 9A-2001.; and

.3 the *Contractor's* WSIB Clearance Certificate."

3.25 **GC 5.6 - DEFERRED WORK**

A. Add new paragraph GC 5.6.2:

"5.6.2 Notwithstanding the provisions of GC 5.3 PAYMENT, GC 5.4 SUBSTANTIAL PERFORMANCE OF THE WORK AND PAYMENT OF HOLDBACK and GC 5.5 FINAL PAYMENT, the *Owner* may withhold payment of any amounts otherwise due under the *Contract* on account of any costs or damages the *Owner* has incurred or, is likely to incur, by reason of:

.1 defective or incomplete portions of the *Work* or damage to the work of *Other Contractors* not rectified in accordance with the *Contract*;

.2 failure of the *Contractor* to indemnify the *Owner* in accordance with the terms of the *Contract*;

.3 failure of the *Contractor* to fulfil its obligations in respect of construction liens in accordance with GC 14.2 CONSTRUCTION LIENS;

.4 evidence of the *Contractor*'s failure to make payments to *Subcontractors* or *Suppliers*;

.5 unsatisfactory prosecution of the *Work* by the *Contractor* or any *Subcontractor*, and

.6 failure to attain the *Contract Time*. "

B. Add new paragraph GC 5.6.3:

"5.6.3 Where the *Owner* has withheld payment of any portion of the *Contract Price* pursuant to the provision of paragraphs 5.6.1 or 5.6.2, the *Owner* shall be entitled to apply such withheld portion towards any costs or damages suffered by the *Owner*."

### 3.26 GC 6.1 – OWNER'S RIGHT TO MAKE CHANGES

A. Amend paragraph 6.1.2 by adding the following to the end of that paragraph:
"This requirement is of the essence and it is the express intention of the parties that any claims by the *Contractor* for a change in the *Contract Price* and/or *the Contract Time* shall be barred unless there has been strict compliance with PART 6 – CHANGES IN THE WORK. No course of conduct or dealing between the parties, no express or implied acceptance of alterations or additions to the *Work*, and no claims that the *Owner* has been unjustly enriched by any alteration or addition to the *Work*, whether in fact there has been any such unjust enrichment or not, shall be the basis of a claim for additional payment under this *Contract* or a claim for any extension of the *Contract Time*."

B. Add new paragraphs 6.1.3, 6.1.4, 6.1.5, 6.1.6, and 6.1.7, 6.1.8, 6.1.9, 6.1.10, 6.1.11, and 6.1.12 as follows:
"6.1.3 The *Contractor* shall not be entitled to receive any compensation or extension of *the Contract Time*, and the *Owner* shall have no obligation or liability to pay compensation to the *Contractor*, unless a *Change Order* or *Change Directive* has been issued to the *Contractor*, in writing, and before the *Contractor* commences with any work in respect of such *Change Order* or *Change Directive*.

6.1.4 There shall be no adjustment to the *Contract Time* should the *Contractor* fail to present a request for a specific adjustment to the *Contract Time*, if any:
.1 at the time of first presenting a request for adjustment to the *Contract Pri*ce in response to a *Contemplated Change Order*; or
.2 within ten (10) *Working Days* of receipt of a *Change Directive*.

6.1.5 There shall be no adjustments to the *Contract Time* or *the Contract Price* or compensation or payment of any kind whatsoever relating to a *Contractor* claim unless notice in writing of the claim is given to *the Owner*, through *Consultant* not later than twenty (20) *Working Days* after the *Contractor* becomes aware of the claim.

6.1.6 Any *Change Order* or *Change Directive* shall clearly set out what, if any, extension of the *Contract Time* is anticipated as a result thereof and failing the inclusion of the same, the *Contractor* shall be barred in making a claim for extension of the *Contract Time* in respect thereof.

6.1.7 The following fee percentage and overhead charges shall be applied to additional work directed by the *Consultant* through a *Change Directive* or *Change Order*:
.1 for changes to the *Work* with a value of less than or equal to $50,000, the *Contractor* shall be entitled to mark-ups for overhead and profit of ten percent (10%) on work performed by the *Contractor*'s own forces plus five percent (5%) on work performed by *Subcontractor*s; and
.2 for changes to the *Work* with a value greater than $50,000, the *Contractor* shall be entitled to mark-ups for overhead and profit of seven and a half percent (7.5%) on work performed by the *Contractor*'s own forces plus five percent (5%) on work performed by *Subcontractor*s.
.3 Where a change is made in work to be carried out by the *Contractor*'s own forces, and for which no *the Contract* unit prices are scheduled, the value of the additional work shall be determined by adding to the reasonable cost of materials and labour (as assessed by the *Consultant*), an allowance for the *Contractor*'s combined overhead and profit of not more than ten percent.
.4 Where such a change is made in work to be carried out by a *Subcontractor*, the value of the additional work shall be determined in a similar manner; the allowances for *Subcontractor*'s overhead and profit, being not more than ten percent for overhead and five percent for profit. In such cases, the *Contractor* shall be permitted to add an allowance in

respect of combined overhead and profit of not more than ten percent on the total of the *Subcontractor*'s quotation.

.5 Additional charges for bonds and insurance relating to the increased value of the *Work* as a result of changes in the *Work*, shall be included in the *Contractor*'s and *Subcontractor*'s overhead relating to the change in the *Work*.

.6 *Work* performed by *Subcontractor* to a *Subcontractor* (sub-subcontractor): Cost of sub-contactor's work plus 5% for the *Contractor*'s overhead and profit. *Subcontractor*'s mark-up shall consist of cost of sub-sub-contactor's work plus 5% for overhead and profit. Sub-subcontractor's mark-up shall consist of the actual cost of the work plus 10% for overhead and profit.

.7 Rates for labour shall be based on standard normal time prevailing rate in the area of work. Rates used in determination of additional work value shall be mutually agreed upon by the *Owner*, *Consultant* and the *Contractor* prior to the commencement of additional work."

6.1.8 Overtime labour costs and labour burdens are the lesser of either the basic or approved overtime hourly wages actually paid for labour in the direct employ of the *Contractor*, *Subcontractor* and Supplier or, those hourly wages established in the community under collective bargaining agreements in effect at the time of the changed *Work* being performed, plus a labour burden mark-up of 50% for every hour the worker consumes in the interests of the changed *Work* on the *Project*. Labour burden covers the full cost of labour in addition to actual wages paid, and includes, but is not necessarily limited to, the cost of workers compensation, employment insurance, holiday pay, travelling time (related to the change) consumed at all times other than actually performing *Work* onsite, sick time, travelling expenses and subsistence allowances, welfare, union dues, industrial training, Canada or Quebec Pension plans, or other pension funds, rest periods, small tools allowances, uniforms, safety equipment and protection, insurance against property damage and personal injury, medical and dental insurance, and all other items reasonably expected to be provided as part of the cost of labour for the provision of the changed *Work*.

6.1.9 There shall be no adjustments to the *Contract Time* or *the Contract Price* or compensation or payment of any kind whatsoever including potential or contingent costs for matters such as loss of profit, loss of productivity, loss of opportunity or any other such losses based on the quantity, scope or cumulative value or number of changes in the *Work* whether resulting from one or more *Change Orders* or *Change Directives*, unless agreed in writing by the parties in a *Change Order*.

6.1.10 Superintendent costs means the overhead costs associated with the provision of superintendence of the *Work* of the *Contractor*, *Subcontractor* or Supplier. Where a Superintendent actually performs *Work* on the improvement, then such costs are payable at the appropriate labour cost as defined in Item 2 above. The additional costs associated with the overhead portion of the superintendent *Work* are to be included in the appropriate the *Contractor*'s, *Subcontractor*'s and Supplier's overhead costs.

6.1.11 Overhead and profit costs means all costs relating to the changed *Work* by the *Contractor*s, *Subcontractors* and Suppliers. Overhead and profit costs include, but are not necessarily limited to, the following: profit, superintendence (other than the actual labour cost and labour burden for a working superintendent) head office costs, site security, temporary facilities, parking, travel and subsistence (including meals and accommodation), site office and communication, disposal (including waste and debris storage transportation and disposal), and small tools (other than those covered by labour burden) estimating, drafting and engineering (including cost associated with any required additional drafting, detailing and modifications to shop or engineering drawings resulting from the change and the distribution and processing of the same), time sensitive costs, schedule acceleration costs, impact costs, financing costs, quality assurance, code compliance inspection and testing services, royalties, patent fees, damages for infringement of patents and costs of defending suits thereof, adjustments in premiums for all bonds and insurance, and adjustments in taxes and duties, the charges for all long distance telephone, facsimile and other communications, courier services, as-built and record drawings, and petty cash items and other

such items reasonably expected to be provided as part of the overhead costs relating to the provision of the changed *Work*.

6.1.12 The *Owner*, through the *Consultant*, reserves the right to authorize payment for a change in the *Work* by means of the *Cash Allowance*."

3.27 **GC 6.2 - CHANGE ORDER**

A. Delete paragraph 6.2.1 inserting new paragraph 6.2.1 as follows:

"6.2.1 When a change in the *Work* is proposed or required, *Consultant* or *the Owner* shall provide a notice describing the proposed change in the *Work* to the *Contractor*. The *Contractor* shall provide:

.1 a quotation from the *Contractor*, on the *Contractor's* letterhead and with the *Contractor's* signature;

.2 quotations from all *Subcontractors*, each on *Subcontractor's* respective letterhead and with *Subcontractor's* respective signature; and

.3 the following information in quotations from *Subcontractors* and the *Contractor:*

(1) a complete breakdown for all items of material;

(2) a total number of hours for labour;

(3) a dollar rate applied against individual material items and labour quantities;

(4) stipulated adjustment in the *Contract Time*, if any, for the proposed change in the *Work;*

(5) percentage values for overhead and profit by the *Contractor* and *Subcontractors*; and

(6) all mathematical calculations, which shall be complete.

Quotations submitted with any of the above items or information in this paragraph 6.2.1 missing or incorrect will be returned for revision."

**3.28 GC 6.3 - CHANGE DIRECTIVE**

A. Delete paragraphs 6.3.7.1(1), (2), (3) and (4) and replace them with the following:

"(1) carrying out the *Work*, including necessary supervisory services;"

"(2) intentionally left blank;"

"(3) engaged in the preparation of *Shop Drawings*, fabrication drawings, coordination drawings and *Project* record drawings: or…"

"(4) including clerical staff engaged in processing changes in the *Work*."

B. Delete paragraphs 6.3.7.5, 6.3.7.11, 6.3.7.15 and 6.3.7.19.

C. Add new paragraph 6.3.14 as follows:

"6.3.14 For purposes of calculating the cost of performing the work attributable to a Change Directive, the *Contractor* shall not be entitled to charge the following:

.1 head office salaries and benefits and all other overhead or general expenses, except only for the salaries, wages and benefits of personnel described in paragraph 6.3.7.1 and the contributions, assessments or taxes referred to in paragraphs 6.3.7.2;

.2 capital expenses and interest on capital;

.3 general clean-up, except where the performance of the work in the *Change Directive* causes specific additional clean-up requirements;

.4 wages paid for field supervision of *Subcontractors*;

.5 wages, salaries, rentals, or other expenses that exceed the rates that are standard in the locality of the *Place of the Work* that are otherwise deemed unreasonable by the *Consultant*;

.6 any costs or expenses attributable to the negligence, improper work, deficiencies, or breaches of *the Contract* by the *Contractor* or *Subcontractor*; and

.7 any cost of quality assurance, such as inspection and testing services, charges levied by authorities, and any legal fees unless any such costs or fees are pre-approved in writing by the *Owner*."

**3.29 GC 6.4 - CONCEALED OR UNKNOWN CONDITIONS**

A. Amend paragraph 6.4.2 by adding a new first sentence which reads as follows:

"Having regard to paragraph 6.4.1, if the *Contractor* believes that the conditions of the *Place of the Work* differ materially from those reasonably anticipated, or differ materially from those indicated in the *Contract* Documents, or were concealed from discovery notwithstanding the conduct of the investigation described in paragraph 6.4.1, it shall notify the *Owner* and *Consultant* in writing no later than five (5) *Work*ing Days after the first observation of such conditions."

B. Amend the existing second sentence of paragraph 6.4.2 so that, as amended, it reads as follows:
"If the finding is that the conditions differ materially, or were concealed from discovery not withstanding the conduct of the investigation described in paragraph 6.4.1, and this would cause an increase or decrease in the *Contractor*'s cost or time to perform the *Work*, the *Consultant*, with the *Owner*'s approval, will issue appropriate instructions for a change in the *Work* as provided in GC6.2 – CHANGE ORDER or GC6.3 – CHANGE DIRECTIVE."

C. Delete paragraph 6.4.3 and substitute the following:
"6.4.3 If the *Consultant* makes a finding pursuant to paragraph 6.4.2 that no change in the *Contract Price* or *the Contract Time* is justified, the *Consultant* shall report in writing the reasons for this finding to the *Owner* and the *Contractor*."

D. Add new paragraphs 6.4.5 and 6.4.6:

"6.4.5 The *Contractor* confirms that, prior to entering into the *Contract*, applying the standard of care described in paragraph 1.5.1.1 of GC 1.5 - PROJECT REQUIREMENTS, it carefully investigated the *Place of the Work*. Notwithstanding any other provision in the *Contract*, the *Contractor* is not entitled to compensation or to an extension of the *Contract Time* for conditions which could reasonably have been ascertained by the *Contractor* by such investigation undertaken prior to the submission of the bid.

6.4.6 The *Contractor* shall not be entitled to claim, and waives its rights to make a claim, for any additional compensation or any increase to the *Contract Time* or *the Contract Price*, if the *Contractor* fails to provide notice to the *Owner* as required in paragraph 6.4.1."

**3.30 GC 6.5 - DELAYS**

A. Delete the period at the end of paragraphs 6.5.1 and 6.5.2 and substitute the following words in each case, "but excluding any any consequential, indirect or special losses or damages, including but not limited to loss of use, loss of productivity, loss of revenue, loss of opportunity, overhead and/or profit."

B. Amend paragraph 6.5.3 by adding the following to the end of that paragraph:
", in which case the *Contractor* shall be reimbursed by the *Owner* for reasonable direct costs directly flowing from the delay but excluding any consequential, indirect or special losses or damages, including but not limited to loss of use, loss of productivity, loss of revenue, loss of opportunity, overhead and/or profit."

C. Amend paragraph 6.5.3.3 by adding "epidemics or pandemics (except for *COVID-19*)," after the word "conditions,"

D. Add new subparagraphs 6.5.6, 6.5.7, 6.5.8, 6.5.9, 6.5.10, 6.5.11, and 6.5.12:
"6.5.6 During and throughout the performance of the *Work*, the *Contractor* shall assume any and all known conditions of *COVID-19* at the time of the execution of this *Contract*, and without limitation shall comply with any and all vaccination and/or *COVID-19* policies and procedures of the *Owner*. Where there is any delay to the *Contract Time* and/or *Project* or increase to the cost of the *Work*, caused by, resulting from, or related to any stop work order, legislation, measures, or direction, issued by any governmental authority having jurisdiction over the *Project*, in respect to, related to, or resulting from *COVID-19* which arises after the execution of this *Contract*, then:
.1 the *Contractor* shall be entitled to an extension of the *Contract Time* for a reasonable time caused by such stop work order, other order, measure, or direction; and
.2 the *Contractor* shall not be entitled to any increase in compensation whatsoever, including, without limitation, any (a) increase to the *Contract Price*, payment of (b) costs, expenses or damages, and/or (c) any consequential, indirect or special losses or damages, including but not limited to loss of use, loss of productivity, loss of revenue, loss of opportunity, overhead and/or profit.

6.5.7 The *Contractor* shall at all times perform the services required to perform the *Work* in accordance with the *Contract Documents* diligently and expeditiously, to maintain an orderly progress of the *Work*, and in conformity with the *Contract Time* and any revisions made thereto in accordance with the *Contract Documents*. The *Contractor* shall at all times provide sufficient personnel to accomplish its services within the *Contract Time*.

6.5.8 If the *Contractor* is delayed in the performance of the *Work* by an act or omission of the *Contractor* or anyone employed or engaged by the *Contractor* directly or indirectly, or by any cause within the *Contractor*'s control, then the *Contractor* shall take appropriate steps, in accordance with paragraph 3.4.2 of GC 3.4 – CONSTRUCTION SCHEDULE to recover any lost time, and the costs of such recovery efforts shall be to the *Contractor's* account. The *Owner* shall be reimbursed by the *Contractor* for all reasonable costs incurred by the *Owner* as the result of such delay, including all services required by the *Owner* from the *Consultant* as a result of such delay by the *Contractor* and, in particular, the cost of the *Consultant*'s services during the period between the date of *Ready-for-Takeover* stated in Article A-1 herein as the same may be extended through the provisions of these General Conditions and any later, actual date of *Ready-for-Takeover* achieved by the *Contractor*.

6.5.9 The *Contractor* shall be responsible for the care, maintenance and protection of the *Work* in the event of any suspension of construction as a result of the delay described in paragraphs 6.5.1, 6.5.2 or 6.5.3. In the event of such suspension, the *Contractor* shall be reimbursed by the *Owner* for the reasonable costs incurred by the *Contractor* for such care, maintenance and protection, but excluding the costs of the *Contractor*'s head office personnel. The *Contractor*'s entitlement to costs pursuant to this paragraph 6.5.9, if any, shall be in addition to amounts, if any, to which the *Contractor* is entitled pursuant to paragraphs 6.5.1, 6.5.2 or 6.5.3.

6.5.10 Without limiting the obligations of the *Contractor* described in GC 3.2 – CONSTRUCTION BY OWNER OR OTHER CONTRACTORS and GC 9.4 – CONSTRUCTION SAFETY, the *Owner* may, by Notice in Writing, direct the *Contractor* to stop the *Work* where the *Owner* determines that there is an imminent risk to the safety of persons or property at the *Place of the Work*. In the event that the *Contractor* receives such notice, it shall immediately stop the *Work* and secure the Project site. The *Contractor* shall not be entitled to an extension of the *Contract Time* or to an increase in the *Contract Price* unless the resulting delay, if any, would entitle the *Contractor* to an extension of the *Contract Time* or the reimbursement of the *Contractor*'s costs as provided in paragraphs 6.5.1, 6.5.2 or 6.5.3.

6.5.11 If the *Contractor* is delayed in the performance of the *Work* by a labour dispute, civil disobedience, riot, sabotage, acts of God or any of the events described in paragraphs 6.5.3.1 through 6.5.3.4 for a period of thirty calendar days or longer, the *Owner* may terminate the *Contract* by giving Notice in Writing to that effect. In such event, the *Owner* shall pay for the *Work* performed up to the effective date of termination, including mobilization and demobilization costs, and for such additional costs, if any, directly flowing from such termination which are a reasonable consequence of the termination, but excluding any consequential, indirect or special losses or damages, including but not limited to loss of use, loss of productivity, loss of revenue, loss of opportunity, overhead and/or profit. The *Owner* shall not be liable to the *Contractor* for any other claims, costs or damages whatsoever arising from such termination of the *Contract*.

6.5.12 The *Contractor* shall provide the *Consultant* with prompt written notice of any actual or anticipated labour dispute which may reasonably be expected to affect the *Contractor*'s performance of the *Work*."

## GC 6.6 CLAIMS FOR A CHANGE IN CONTRACT PRICE

A. In paragraph 6.6.5, delete "claim" in the second line and substitute "necessary claim information".

B. Add new paragraphs 6.6.7 and 6.6.8 as follows:

"6.6.7 The *Owner* may make claims arising out of the costs incurred for additional services provided by *Consultant* resulting from the *Contractor's* failure to perform the *Work* in accordance with the terms and conditions of the *Contract*, including the *Contractor's* issuance of unnecessary requests for information. *Consultant* will notify *the Owner* and the *Contractor* where it has been determined that additional services will be required or have been provided in order not to cause a delay. The *Owner* shall make claims against the *Contractor* based on *Consultant's* invoices.

6.6.8 The *Contractor* shall not make claims arising out of any *COVID-19* conditions known at the time of the execution of this *Contract*."

**3.31 GC 7.1 - OWNER'S RIGHT TO PERFORM THE WORK, TERMINATE THE CONTRACTOR'S RIGHT TO CONTINUE WITH THE WORK, OR TERMINATE THE CONTRACT**

A. Amend paragraph 7.1.2 by (a) adding the words "or fails or neglects to maintain the latest construction schedule" immediately following the word "properly" in the first line; (b) adding the words "or *the Owner* determines that sufficient cause exists to justify such action," in line three after the words "substantial degree"; and (c) deleting the words "including references to applicable provisions of the *Contract*".

B. Delete paragraph 7.1.5.2 and insert new paragraph 7.1.5.2 as follows:
"withhold further payment to the *Contractor* until the *Owner* has completed all *Work* required by the *Contract Documents* and satisfied any of its costs or damages resulting from the *Contractor's* default,"

C. Amend paragraph 7.1.5.3 by deleting the words "as certified by the *Consultant*".

**3.32 GC 7.2 - CONTRACTOR'S RIGHT TO SUSPEND THE WORK OR TERMINATE THE CONTRACT**

A. Amend paragraph 7.2.2, by: (a) in line 1, by deleting "20" and replacing it with "35"; (b) adding the words "or related to *COVID-19*" after the first instance of the word "the *Contractor*" in the third line; and (c) adding the following second sentence at the end of the paragraph: "If the *Work* is suspended or otherwise delayed as a result of *COVID-19* for a period of ninety (90) *Working Days*, the *Contractor* may, upon giving *the Owner* twenty (20) days *Notice in Writing*, terminate the *Contract*."

B. Delete subparagraph 7.2.3.1 in its entirety and substitute the words "Intentionally deleted."

C. Delete subparagraph 7.2.3.3 in its entirety and substitute new subparagraph 7.2.3.3:
"the *Owner* fails to pay the *Contractor* when due the amount certified by the *Consultant* or awarded by adjudication, arbitration or a court, except where the *Owner* has a bona fide claim for set off, or"

D. Delete from line 2 of subparagraph 7.2.3.4, the words, "except for GC5.1 – FINANCING INFORMATION REQUIRED OF THE OWNER,".

E. Delete paragraph 7.2.5 and replace it with the following:
"7.2.5 If the default cannot be corrected within the five (5) *Work*ing Days specified in paragraph 7.2.4, the *Owner* shall be deemed to have cured the default if it
.1 commences the correction of the default within the specified time; and
.2 provides the *Contractor* with an acceptable schedule for such correction; and
.3 completes the correction in accordance with such schedule."

F. Add new paragraphs 7.2.6 and 7.2.7:
"7.2.6 If the *Contractor* terminates the *Contract* under the conditions described in this GC 7.2, the *Contractor* shall be entitled to be paid for all *Work* performed to the date of termination. The *Contractor* shall also be entitled to recover the direct and demonstrable costs and expenses associated with termination, including the costs of demobilization, losses sustained on Products and construction machinery and equipment. The *Contractor* shall not be entitled to any recovery for any consequential, indirect or special losses or damages, including but not limited to loss of use, loss of productivity, loss of revenue, loss of opportunity, overhead and/or profit.

7.2.7 The *Owner*'s withholding of progress payments, holdback payment and/or final payments pursuant to GC 5.6 shall not constitute a default under paragraph 7.2.3 permitting the *Contractor* to stop the *Work* or terminate the *Contract*."

### 3.33 GC 8.1 AUTHORITY OF THE CONSULTANT

A. Delete paragraphs 8.1.1, 8.1.2 and 8.1.3 and substitute the following:

"8.1.1 Differences between *the Owner* and the *Contractor* as to the interpretation, application, or administration of this *Contract*, or any failure to agree where agreement between the parties is called for in the *Contract* (the "Dispute") which are not resolved in the first instance by finding of *Consultant* pursuant to the provisions of GC - 2.2 ROLE OF THE CONSULTANT, paragraphs 2.2.6 and 2.2.7 shall be settled in accordance with the requirements of this GC 8.1.

8.1.2 The claimant shall give written notice of the Dispute ("Notice of Dispute") to the other party no later than seven (7) days after the receipt of *Consultant*'s finding given under paragraphs 2.2.7 or 2.2.8 of GC 2.2 ROLE OF THE CONSULTANT. The Notice of Dispute shall set forth particulars of the matters in dispute, the probable extent and value of the damage, and the relevant provisions of the *Contract* Documents. The other party shall reply within seven (7) days of receipt of the Notice of Dispute, or such longer period as mutually agreed by the parties in writing, setting out the response and any relevant provisions of the *Contract* Documents.

8.1.3 The parties shall make all reasonable efforts to resolve the Dispute by amicable negotiations and agree to provide, without prejudice, full, frank, candid, and timely disclosure of relevant facts, information and documents to facilitate the negotiations.

8.1.4 If the *Dispute* is not resolved promptly by amicable negotiations in accordance with GC 8.1.3, *Consultant* may provide instructions that, in *Consultant*'s opinion, are necessary for the proper performance of the *Work* and to prevent delays pending settlement of the *Dispute.* The parties shall act immediately according to such instructions, it being understood that by so doing neither party will jeopardize any claim they may have. If it is subsequently determined that such instructions were in error or at variance with the *Contract Documents*, *the Owner* shall pay the *Contractor* verifiable costs incurred by the *Contractor* in carrying out such instructions, which the *Contractor* was required to do beyond what the *Contract Documents* correctly understood and interpreted would have required the *Contractor* to do including costs resulting from interruption of the *Work*.

8.1.5 It is agreed that no act by either party shall be construed as a renunciation or waiver of any of their rights or recourses, provided the party has given the notices in accordance with paragraph 8.1.2 and has carried out the instructions as provided in paragraph 8.1.4, if any.

8.1.6 If the parties have not been able to resolve the Dispute in accordance with paragraph 8.1.3, the parties may agree to submit the *Dispute* to be finally resolved by arbitration under the rules of arbitration as provided in CCDC 40 in effect at the time of the execution of the *Contract*.

8.1.7 If no agreement is made for arbitration, then either party may submit the *Dispute* to such judicial tribunal as the circumstances may required."

### 3.34 GC 8.3 NEGOTIATION, MEDIATION AND ARBITRATION

A. Delete 8.3 in its entirety and substitute the following: "Intentionally deleted".

### 3.35 GC 8.4 - RETENTION OF RIGHTS

A. Amend paragraph 8.4.2 by deleting "paragraph 8.3.6 of GC 8.3 – NEGOTIATION, MEDIATION AND ARBITRATION" and substituting "GC 8.1 – AUTHORITY OF THE CONSULTANT".

B. Add new subparagraph 8.4.3:

"8.4.3 If the either party give a *Notice in Writing* described in paragraph 8.3.6 to have a *Dispute* resolved by arbitration, the *Contractor* agrees that this paragraph 8.4.3 shall be construed as a formal consent to the stay of any lien proceedings until an award is rendered in the arbitration or such *Dispute* is otherwise resolved between the parties. In no event shall the *Contractor* be deprived of its right to enforce its lien against the *Project* should the *Owner* fail to satisfy any arbitral award against it in full on the dispute in respect of which the lien proceedings were commenced. Provided

nothing in this paragraph 8.4.3 shall prevent the *Contractor* from taking the steps required by the *Act* to preserve and/or perfect a lien to which it may be entitled."

### 3.36 GC 9.1 - PROTECTION OF WORK AND PROPERTY

A. Delete subparagraph 9.1.1.1 in its entirety and substitute new subparagraph 9.1.1.1:
"errors or omissions in the *Contract* Documents which the *Contractor* could not have reasonably discovered applying the standard of care described in paragraph 1.5.1.1 of GC 15 – PROJECT REQUIREMENTS; or"

B. Delete paragraph 9.1.2 in its entirety and substitute the following new paragraph 9.1.2:
"9.1.2 Before commencing any *Work*, the *Contractor* shall determine the locations of all underground utilities and structures indicated in or reasonably apparent or determinable from the *Contract* Documents or that are reasonably discoverable by applying to an inspection of the *Place of the Work* the degree of care and skill described in paragraph 1.5.1.1 of GC 1.5 – PROJECT REQUIREMENTS."

C. Add a new paragraphs 9.1.5, 9.1.6 and 9.1.7 as follows:
"9.1.5 Without in any way limiting the *Contractor*'s obligations under this GC 9.1, should the *Contractor* or any *Subcontractor* or Supplier cause loss or damage to trees or other plantings, whether owned by the *Owner* or third parties, the *Contractor* shall be liable for the replacement cost of the trees or other plantings damaged, including the cost of any arborist or other consultant, and such costs may be deducted by the *Owner* from amounts otherwise owing to the *Contractor*."

"9.1.6 The *Contractor* shall neither undertake to repair and/or replace any damage whatsoever to the *Work* of *Other Contractors*, or to adjoining property, nor acknowledge the same was caused or occasioned by the *Contractor*, without first consulting the *Owner* and receiving written instructions as to the course of action to be followed from either the *Owner* or the *Consultant*. However, where there is danger to life or public safety, the *Contractor* shall take such emergency action as it deems necessary to remove the danger."

"9.1.7 The *Contractor* shall be responsible for keeping the *Work* free from trespassers and for protection of the *Work* and the public from any loss or injury directly or indirectly caused by the *Work* from the commencement of construction until *Substantial Performance of the Work*."

### 3.37 GC 9.2 - TOXIC AND HAZARDOUS SUBSTANCES

A. Amend paragraph 9.2.5.3 by asserting the following words after the words "place of the work" in line two of that paragraph:
"and no property is injured or destroyed as a result of exposure to or the presence of the toxic or hazardous substances,"

B. Delete the word "and" at the end of paragraph 9.2.5.3.

C. Add the word "and" at the end of paragraph 9.2.5.4.

D. Add a new paragraph 9.2.5.5 as follows:
"take any further steps it deems necessary to mitigate or stabilize any conditions resulting from encountering toxic or hazardous substances.

E. Add to paragraph 9.2.6 after the word "responsible", the following new words:
"or that any toxic or hazardous substances already at the *Place of the Work* (and which were then harmless or stored, contained or otherwise dealt with in accordance with legal and regulatory requirements) were dealt with by the *Contractor* or anyone for whom the *Contractor* is responsible in a manner which does not comply with legal and regulatory requirements, or which threatens human health and safety or the environment, or material damage to the property of the *Owner* or others,".

F. Amend paragraph 9.2.7.3 by inserting the following words after the word "delay" in line two of that paragraph:
", but excluding any consequential, indirect or special losses or damages, including but not limited to loss of use, loss of productivity, loss of revenue, loss of opportunity, overhead and/or profit."

G. Add to paragraph 9.2.8 after the word "responsible", the following new words:

"or that any toxic or hazardous substances already at the *Place of the Work* (and which were then harmless or stored, contained or otherwise dealt with in accordance with legal and regulatory requirements) were dealt with by the *Contractor* or anyone for whom the *Contractor* is responsible in a manner which does not comply with legal and regulatory requirements, or which threatens human health and safety or the environment, or material damage to the property of the *Owner* or others,".

H. Add "and the *Consultant*" after the word "*the Owner*" in subparagraph 9.2.8.4.

I. Add a new paragraph 9.2.10 as follows:

"9.2.10 Without limiting its other obligations under this GC 9.2, the *Contractor* acknowledges that its obligations under the *Contract* include compliance with the *Environmental Programs.* The *Contractor* acknowledges that the *Owner* may suffer loss and damage should the *Contractor* fail to comply with the *Environmental Programs* and agrees to indemnify and hold harmless the *Owner* with respect to any loss or damage to which the *Owner* is exposed by the *Contractor*'s failure to comply. The *Contractor* expressly agrees that such loss and damage shall be included within the scope of the *Contractor*'s indemnity described in paragraph 12.1.1. The *Contractor* acknowledges that should it fail to comply with the *Environmental Programs*, such failure will constitute a failure to comply with the *Contract* to a substantial degree within the meaning of paragraph 7.1.2."

**3.38 GC 9.4 - CONSTRUCTION SAFETY**

A. Delete paragraph 9.4.1 in its entirety and substitute new paragraph 9.4.1:

"9.4.1 The *Contractor* shall be solely responsible for construction safety at the *Place of the Work*, and for compliance with the rules, regulations and practices required by the applicable construction health and safety legislation, the *Owner*'s health and safety regulations, guidelines, and instructions for contractors, and the *Owner's* vaccination and/or *COVID-19* policies, as may be amended. The *Contractor* shall be responsible for initiating, maintaining and supervising all safety precautions and programs in connection with the performance of the *Work*. The *Contractor* shall be deemed to be and accepts the designation of "constructor" as defined in the *OHSA* for the Project, and responsibility for the obligations and liabilities associated therewith. Prior to the commencement of the *Work*, the *Contractor* shall submit to the *Owner* a copy of the Notice of Project filed with the Ministry of Labour in respect of the *Work*."

B. Add new paragraphs 9.4.6, 9.4.7, 9.4.8, 9.4.9, 9.4.10, and 9.4.11:

"9.4.6 Prior to the commencement of the *Work*, the *Contractor* shall submit to the *Owner*:

.1 a current WSIB clearance certificate;

.2 copies of the *Contractor*'s insurance policies having application to the Project or certificates of insurance, at the option of the *Owner*;

.3 documentation of the *Contractor*'s in-house safety-related programs;

.4 a copy of the Notice of Project filed with the Ministry of Labour naming itself as "constructor" under OHSA.

9.4.7 The *Contractor* hereby represents and warrants to the *Owner* that appropriate health and safety instruction and training have been provided and will be provided to the *Contractor*'s employees, *Subcontractors* and Suppliers, before the *Work* is commenced. The *Contractor* also undertakes to provide such health and safety instruction and training to the *Owner*'s representatives, the *Owner*'s own forces and other contractors, should they fall under the jurisdiction of the *Contractor* as more particularly described in paragraph 9.4.1 above.

9.4.8 The *Contractor* shall indemnify and save harmless the *Owner*, the *Consultant* and their respective agents, officers, directors, employees, consultants, subconsultants, successors and assigns from and against any and all liability, cost, damage or loss, including legal fees and fines, related to or arising out of any and all acts or omissions of the *Contractor*, its *Subcontractors*, *Suppliers*, employees, agents or representatives which contravene the *Contractor*'s duties and obligations, as constructor, pursuant to the *OHSA* (including, without limitation, the consequences of any and all safety infractions committed by the *Contractor* under the *OHSA*), including the payment of legal fees and disbursements on a solicitor and client basis. Such indemnity shall apply to the extent to which the *Owner* is not covered by insurance, provided that the indemnity contained in this

paragraph shall be limited to costs and damages resulting directly from such infractions and shall not extend to any consequential, indirect or special damages.

9.4.9 Without limiting the generality of paragraph 9.4.7, the *Contractor*,

.1 agrees to waive and release *the Owner* and its agents, officers, directors, employees, successors and assigns from any and all claims, demands, losses, costs, damages, actions, suits, or proceedings as against; and

.2 shall indemnify and save harmless *the Owner*, *Consultant* and their respective agents, officers, directors, employees, successors and assigns, from and against any and all claims, demands, losses, costs, damages, actions, suits, or proceedings by any the *Contractor*'s employees, *Subcontractors*, Suppliers, and/or third parties,

that arise out of, are caused or contributed by, or are attributable to *COVID-19*, including and without limiting the generality of the foregoing, any claims, demands, losses, costs, damages, actions, suits or proceedings arising from, caused or contributed by, or attributable to *COVID-19* outbreaks originating from or on *the Owner*'s premises.

9.4.10 In the event that the *Owner* engages *Other Contractors* at the *Place of the Work* or performs work with its own forces, the *Owner* undertakes to include in its contracts with *Other Contractors* and/or in its instructions to its own forces the requirement that the *Other Contractors* or own forces, as the case may be, will comply with directions and instructions from the *Contractor*, as "constructor", with respect to occupational health and safety and related matters. The text of such instruction is attached to these Supplementary Conditions as Appendix 1 to these Supplementary Conditions.

9.4.11 All of the safety measures outlined in this agreement, or reasonably requested by the *Owner*, or implemented in order to comply with applicable law shall be at the sole expense of the *Contractor*."

**3.39 GC 9.5 - MOULD**

A. Delete paragraph 9.5.3.3 in its entirety and substitute new paragraph 9.5.3.3:

"extend the *Contract Time* for such reasonable time as the *Consultant* may recommend in consultation with the *Contractor*. If, in the opinion of the *Consultant*, the *Contractor* has been delayed in performing the *Work* and / or has incurred additional costs under paragraph 9.5.1.2, the *Owner* shall reimburse the *Contractor* for reasonable costs incurred as a result of the delay and as a result of taking those steps, but excluding any consequential, indirect or special losses or damages, including but not limited to loss of use, loss of productivity, loss of revenue, loss of opportunity, overhead and/or profit, and"

**3.40 GC 10.1 - TAXES AND DUTIES**

A. Amend paragraph 10.1.2 by adding the following sentences at the end of that paragraph:

"Except where the Specifications require otherwise, this increase in costs shall not apply where taxes and duties known before bid submission, become effective after bid submission. The *Contract Price* shall be deemed to include such increased duties and taxes. For greater certainty, the *Contractor* shall not be entitled to any mark-up for overhead or profit on any increase in such taxes and duties and the *Owner* shall not be entitled to any credit relating to mark-up for overhead or profit on any decrease in such taxes."

B. Add new paragraphs 10.1.3, 10.1.4, 10.1.5 and 10.1.6 as follows:

"10.1.3 Where the *Owner* is entitled to an exemption or a recovery of sales taxes, customs duties, excise taxes or Value Added Taxes applicable to the *Contract*, the *Contractor* shall, at the request of the *Owner* or the *Owner*'s representative, assist with application for any exemption, recovery or refund of all such taxes and duties and all amounts recovered or exemptions obtained shall be for the sole benefit of the *Owner*. The *Contractor* agrees to endorse over to the *Owner* any cheques received from the federal or provincial governments, or any other taxing authority, as may be required to give effect to this paragraph."

"10.1.4 The *Contractor* shall maintain accurate records of equipment, material and component costs reflecting the taxes, customs duties, excise taxes and *Value Added Taxes* paid."

"10.1.5 Any refund of taxes including, without limitation, any government sales tax, customs duty, excise tax or Value Added Tax, whether or not paid, which is found to be inapplicable or for which exemption may be obtained, is the sole and exclusive property of the *Owner*. The *Contractor* agrees to cooperate with the *Owner* and to obtain from all *Subcontractors* and Suppliers cooperation with the *Owner* in the application for any refund of any taxes, which cooperation shall include, but not be limited to, making or concurring in the making of an application for any such refund or exemption and providing to the *Owner* copies, or where required, originals of records, invoices, purchase orders and other documentation necessary to support such applications or exemptions or refunds. All such refunds shall either be paid to the *Owner*, or shall be a credit to the *Owner* against the *Contract Price*, in the *Owner*'s discretion."

"10.1.6 Customs duties penalties, or any other penalty, fine or assessment levied against the *Contractor* shall not be treated as a tax or customs duty for purposes of this GC 10.1."

**3.41 GC 10.2 - LAWS, NOTICES, PERMITS, AND FEES**

A. Delete paragraph 10.2.2 in its entirety and replace it with the following:
"10.2.2 The *Owner* shall obtain and pay for permanent easements and rights of servitude. The building permit will be obtained and paid for by the *Contractor*. The *Contractor* shall be responsible to obtain and pay for all other permits, licenses or certificates necessary for the performance of the *Work* which were in force at the date of bid closing. The *Owner* shall pay any plan inspection fee charged by the Ministry of Labour."

B. Add to the end of paragraph 10.2.4, the following words:
"The *Contractor* shall notify the Chief Building Official or the registered code agency where applicable, of the readiness, substantial completion, and completion of the stages of construction set out in the Ontario Building Code. The *Contractor* shall be present at each site inspection by an inspector or registered code agency as applicable under the Ontario Building Code. The *Contractor* shall be present at each site inspection by an inspector or registered code agency as applicable under the Ontario Building Code"

C. Delete from the first line of paragraph 10.2.5 the word, "The" and substitute the words:
"Subject to paragraph 1.1.3 and 1.1.4 of GC 1.1 – GENERAL CONDITIONS OF THE STIPULATED PRICE CONTRACT, the".

D. Amend paragraph 10.2.7 by (a) deleting "bid closing" and substituting "execution of the *Contract*", and (b) adding the following to the end of the paragraph: ", save and except for changes related to COVID-19 which are provided for under paragraph 6.5.6 of GC 6.5 - DELAYS."

3.42 **GC12.1 – READY-FOR-TAKEOVER**

A. Amend paragraph 12.1.1.1 by adding ", and all prerequisites for substantial performance under the Construction Act, RSO 1990, c C.30 have been satisfied." after the word "*Work*".

B. Amend paragraph 12.1.1.4 by (a) adding "spare parts, maintenance materials, warranties, data manuals, and specifications" after the words "maintenance documents" and (b) deleting the word "immediate".

C. Add new paragraphs 12.1.1.9, 12.1.1.10, and 12.1.1.11:

"12.1.1.9 Local fire authority has inspected and confirmed that life safety systems are acceptable, if required by the *Contract Documents.*

12.1.1.10 Elevator inspection and approval by governing authority received by *Consultant*, if required by the *Contract Documents.*

12.1.1.11 Any other prerequisites required by the *Contract Documents*."

D. Amend paragraph 12.1.2 by deleting "to 12.1.1.6" and substituting ", 12.1.1.5, and 12.1.1.8".

E. Amend paragraph 12.1.4 by deleting "10 calendar days" and substituting "fifteen (15) *Work*ing Days, or such longer period as may be reasonably required in the circumstances".

F. Amend paragraph 12.1.6 by adding "RIGHT OF ENTRY AND " after "GC 12.2 – ".\

**3.43 GC 12.2 RIGHT OF ENTRY AND EARLY OCCUPANCY BY THE OWNER**

A. Delete GC 12.2 EARLY OCCUPANCY BY THE OWNER in its entirety and substitute the following:

"GC 12.2 RIGHT OF ENTRY AND EARLY OCCUPANCY BY THE OWNER

12.2.1 *the Owner* shall have the right to enter or occupy the *Work* in whole or in part for the purpose of placing fittings and equipment or for other uses before Ready-for-Takeover, if, in the opinion of *Consultant* and *the Owner*, such entry or occupation does not prevent or substantially interfere with the *Contractor* in completion of the *Contract* within the *Contract Time*. Such entry or occupation shall not be considered as acceptance of the *Work* or in any way relieve the *Contractor* from responsibility to complete the *Contract* or its obligations under the *Contract*.

**3.44 GC 12.3 WARRANTY**

A. Amend paragraph 12.3.1 by adding the following sentence to the end of the paragraph:

"Where the Project is phased and the Specifications instruct the *Contractor* that the *Work* will be completed in stages or phases and turned over to the *Owner* for permanent use and occupancy prior to the *Substantial Performance of the Work*, the warranty for such stage or phase shall commence, for the particular phase or stage only, on the date the *Owner* takes possession of the phase or stage for permanent use or occupancy and issues a Notice in Writing to that effect."

B. Delete from the first line of paragraph 12.3.2 the word, "The" and substitute the words "Subject to paragraphs 1.1.3 and 1.1.4 of GC 1.1 – GENERAL CONDITIONS OF THE STIPULATED PRICE CONTRACT, the".

C. Amend paragraph 12.3.6 by adding the words ", unless otherwise required by the *Contract* Documents" to the end of the third sentence.

D. Add new paragraphs 12.3.7 and 12.3.8 as follows:

"12.3.7 Any items which are replaced under warranty or extended warranty shall be warranted from the time of such replacement for an additional period equalling the original warranty under which they were repaired or replaced.

12.3.8 During the month prior to the end of the warranty period, the *Owner*, the *Consultant* and the *Contractor* shall conduct an inspection of the *Work* and the *Contractor* shall promptly remedy any defects to faulty materials or workmanship."

**3.45 GC13.1 - INDEMNIFICATION**

A. Delete paragraphs 13.1.1 through 13.1.6 and replace them with the following:

"13.1.1 Without restricting the parties obligations to indemnify respecting toxic and hazardous substances, patent fees, and health and safety:

.1 the *Contractor* shall indemnify and hold harmless the *Owner* and the *Consultant*, their agents and employees from and against all claims, demands, losses, costs, damages, actions, suits, or proceedings (hereinafter called "claims"), by third parties that arise out of, or are attributable to, the *Contractor*'s performance of the *Contract* provided such claims are:

(1) attributable to bodily injury, sickness, disease, or death, or to injury to or destruction of tangible property, and

(2) caused by negligent acts or omissions of the *Contractor* or anyone for whose acts the *Contractor* may be liable, and

(3) made in writing within a period of 6 years from the date of *Substantial Performance of the Work* as set out in the certificate of *Substantial Performance of the Work*, or within such shorter period as may be prescribed by any limitation statute of the province or territory of the Place of *Work*.

(4) Except as otherwise provided in this *Contract*, the *Owner* expressly waives the right to indemnity for claims other than those stated above.

The obligation of the *Contractor* to indemnify hereunder shall be limited to $5,000,000 per occurrence from the commencement of the *Work* until *Substantial Performance of the Work* and thereafter to an aggregate limit of $5,000,000.

.2 The *Owner* shall indemnify and hold harmless the *Contractor*, the *Contractor*'s agents and employees from and against claims, demands, losses, costs, damages, actions, suits, or proceedings arising out of the *Contractor*'s performance of the *Contract* which are attributable to a lack of or defect in title or an alleged lack of or defect in title to the Place of *Work*."

### 3.46 GC 13.2 - WAIVER OF CLAIMS

A. Delete paragraphs 13.2.1 through 13.2.10 and replace them with the following:

"13.2.1 As of the date of final payment, the *Owner* expressly waives and releases the *Contractor* from all claims against the *Contractor* including without limitation those that might arise from negligence or breach of contract by the *Contractor* except for one or more of the following:

.1 those made in writing prior to the date of final payment and still unsettled;

.2 those arising from the provisions of GC13.1 – INDEMNIFICATION or GC13.3 – WARRANTY;

.3 those arising from GC9.2 – TOXIC AND HAZARDOUS SUBSTANCES and arising from the *Contractor* bringing or introducing any toxic or hazardous substances and materials to the *Place of the Work* after the *Contractor* commences the *Work*;

.4 those made by Notice in Writing within a period of six years from the date of *Substantial Performance of the Work* as set out in the certificate of substantial performance, or within such shorter period as may be prescribed in any limitation statute of the province or territory of the *Place of the Work* and arising from any liability of the *Contractor* for damages resulting from the *Contractor*'s performance of the *Contract* with respect to substantial defects or deficiencies in the *Work* for which the *Contractor* is proven responsible. As used herein, "substantial defects or deficiencies" means any defect or deficiency in the *Work* where the reasonable cost of repair of such defect or deficiency exceeds:

.1 for a *Contract Price* of $2,000,000 or less, the sum of $50,000, before GST;

.2 for a *Contract Price* of $2,000,000 or more, the sum of $100,000, before GST.

13.2.2 As of the date of certificate of *Substantial Performance of the Work*, the *Contractor* expressly waives and releases the *Owner* from all claims which it has or reasonably ought to have knowledge of that could be advanced against the *Owner* including without limitation those that might arise from the negligence or breach of contract by the *Owner* except:

.1 those for which *Notice in Writing* was given prior to the *Contractor*'s application for final payment and still unsettled; and

.2 those arising from the provisions of GC9.2 – TOXIC AND HAZARDOUS SUBSTANCES or GC10.3 – PATENT FEES."

### 3.47 PART 14 - OTHER PROVISIONS

A. Add new **PART 14 – OTHER PROVISIONS** as follows:

**GC 14.1 - OWNERSHIP OF MATERIALS**

14.1.1 Unless otherwise specified, all materials existing at the *Place of the Work* at the time of execution of the *Contract* shall remain the property of the *Owner*. All *Work* and Products delivered to the *Place of the Work* by the *Contractor* shall be the property of the *Owner*. The *Contractor* shall remove all surplus or rejected materials as its property when notified in writing to do so by the *Consultant*.

GC 14.2 - CONSTRUCTION LIENS

14.2.1 In the event that a construction lien is registered against the Project by or through a *Subcontractor* or Supplier, and provided that the liens did not arise as a direct result of the failure by the *Owner* to pay the *Contractor* in accordance with the *Contract*, the *Contractor* shall, at its own expense:

.1 within ten (10) days, ensure that any and all construction liens and certificates of action are discharged, released or vacated by the posting of security in accordance with the *Act*; and

.2 in the case of written notices of lien, ensure that such notices are withdrawn, in writing.

14.2.2 In the event that the *Contractor* fails to comply with GC 14.2, the *Owner* may see to the removal of the construction lien or certificate of action or the withdrawal of the written notice of lien, and in that event, the *Contractor* shall be liable to *the Owner* for any and all costs and expenses, including legal costs on a full indemnity basis, associated therewith. the *Owner* shall be at liberty to set off such costs and expenses against any amount otherwise due to the *Contractor* under this *Contract*. If there is no amount owing by the *Owner* to the *Contractor*, then the *Contractor* shall reimburse the *Owner* for all of the said costs and associated expenses."

**GC 14.3 - CONTRACTOR DISCHARGE OF LIABILITIES**

14.3.1 In addition to the obligations assumed by the *Contractor* pursuant to GC 3.6, the *Contractor* agrees to discharge all liabilities incurred by it for labour, materials, services, *Subcontractors* and Products, used or reasonably required for use in the performance of the *Work*, except for amounts withheld by reason of legitimate dispute and which have been identified to the party or parties, from whom payment has been withheld.

**GC 14.4 - AS-BUILT DRAWINGS**

14.4.1 Unless otherwise provided in the *Contract Documents*, the *Contractor* shall prepare as-built drawings and provide them to the *Consultant* for review in accordance with paragraph 12.1.1.5.

**GC 14.5 - DAILY REPORTS/DAILY LOGS**

14.5.1 The *Contractor* shall cause its supervisor, or such competent person as it may delegate, to prepare a daily log or diary reporting on weather conditions, work force of the *Contractor*, *Subcontractors*, Suppliers and any other forces on site and also record the general nature of Project activities. Such log or diary shall also include any extraordinary or emergency events which may occur and also the identities of any persons who visit the site who are not part of the day-to-day work force.

14.5.2 The *Contractor* shall also maintain records, either at its head office or at the job site, recording manpower and material resourcing on the Project, including records which document the activities of the *Contractor* in connection with GC 3.4, and comparing that resourcing to the resourcing anticipated when the most recent version of the schedule was prepared pursuant to GC 3.4.

**GC 14.6 - NEUTRAL APPOINTING AUTHORITY**

14.6.1 For purposes of the Rules the term "neutral appointing authority", shall mean the "Appointing Committee" at ADR Chambers presiding at the time notice of the dispute is given pursuant to the *Contract*."

**GC 14.7 - PUBLIC STATEMENTS**

14.7.1 The *Contractor* shall not publish, issue or make any statements or news release, electronic or otherwise, concerning the *Contract*, the *Work*, or the *Project*, without the express written consent of the *Owner*.

**GC 14.9 - HOSPITAL RELATED PROVISIONS**

14.9.1 The *Contractor* acknowledges that the security and safety of the patients, employees and other occupants of the existing hospital is paramount. If any of the employees of the *Contractor* or the *Subcontractors* is determined by the *Owner* to be a concern for the security or safety of such patients, employees or occupants, the *Owner* may require that the *Contractor* replace such employee.

14.9.2 The *Contractor* recognizes that part of the *Work* may consists of the renovation of existing buildings and structures or the addition of a structure to an existing building. The *Contractor*:

.1 recognizes that that the provision of patient care during construction is a priority for the *Owner*. The *Contractor* shall comply with the reasonable instructions provided by the *Owner* (including, without limitation, the *Owner*'s infection control practitioner) in regard to patient care and the operation and use of the hospital during the performance of the *Work*. Any costs incurred by the *Contractor* in complying with the said instructions shall be part of the *Contract Price*.

.2 without in any way limiting its responsibilities under this *Contract*, the *Contractor* shall take all reasonable steps to avoid interference with fire exits, building access and egress, continuity of electric power and all other utilities, to suppress dust and noise, to avoid conditions likely to propagate mould or fungus of any kind, and all other steps reasonably necessary to promote and maintain the safety and comfort of the users and occupants of such structures or adjacent structures. Without *the Owner's* prior approval, the *Contractor* shall not permit any *Work*er or *Subcontractor*s to use any existing facilities including, without limitation, lavatories, toilets, entrances and parking areas other than those designated by the *Owner*.

14.9.3 Notwithstanding any other provision in the *Contract*, paramountcy of access must be given to emergency vehicles and no claim may be made by the *Contractor* for any delay in the performance of the *Work* as a result of any temporary lack of access to the Place of *Work* resulting from this paramountcy of access by emergency vehicles, provided that the *Owner* will use commercially reasonable efforts to avoid and to limit the duration of any temporary lack of access for this reason.

14.9.4 The *Owner* has the authority, but without the obligation, to stop the *Work* in any circumstance affecting the safety of life or property or otherwise may cause an unsafe condition for the operation of the existing hospital. The *Contractor* shall abide by the *Owner*'s instructions to stop the *Work* and to any related instructions pertaining to the circumstance without any increase in the *Contract Price* and extension in the *Contract Time* if such circumstance was caused by the *Contractor*, *Subcontractors* or Suppliers.

14.9.5 The *Contractor* shall, and shall cause the *Subcontractors* and Suppliers to, comply with hospital policies and procedures including, without limitation, environmental requirements, infection control measures and safety and emergency preparedness guidelines which are or come into force (including, without limitation, those forming part of the *Contract* Documents) as such documents are amended by the *Owner* from time to time, provided that a material amendment to the hospital policies and procedures by the *Owner* after the date of the Agreement which gives rise to a significant change in the *Work* shall be dealt with in accordance PART 6 - CHANGES IN THE WORK."

***END OF SUPPLEMENTARY CONDITIONS***

# APPENDIX 1

## LANGUAGE FOR OWNER PERSONNEL OR FOR THIRD PARTY CONTRACTORS ENTERING A PROJECT SITE WHERE THE CONTRACTOR HAS ASSUMED OVERALL RESPONSIBILITY – IN CONTRACT – FOR OCCUPATIONAL HEALTH AND SAFETY

"The (trade or employee) acknowledges that the work it will perform on behalf of Kingston General Hospital (the "*the Owner*") requires it to enter a job site which is under the total control of a [name of contractor] (the "the *Contractor*").

The (trade or employee) acknowledges that the *Contractor* has assumed overall responsibility for compliance with all aspects of the health and safety legislation of Ontario, including all the responsibilities of the "constructor" under the Occupational Health and Safety Act (Ontario). Further, (trade or employee) acknowledges that the *Contractor* is also responsible to the *Owner* to co-ordinate and schedule the activities of our work with the work of the *Contractor*.

We agree to comply with the *Contractor* directions and instructions with respect to occupational health and safety and coordination. We acknowledge that it will be cause for termination under our contract with the *Owner* should (I/we) fail or refuse to accept the direction and instruction of the *Contractor* with respect to matters of occupational health and safety or matters related to coordination of work.

We agree to have the *Contractor* named as an additional insured on our comprehensive liability policy."

# APPENDIX 2

## AMENDMENT TO RULES FOR MEDIATION AND ARBITRATION OF CONSTRUCTION INDUSTRY DISPUTES

## (CCDC-40, 2018) (THE "RULES")

This Amendment supersedes, replaces or amends the Rules, as the case may be, as outlined below.

## RULES FOR MEDIATION OF CCDC 2 CONSTRUCTION INDUSTRY DISPUTES

A. By Agreement. Delete clause 5.1 and replace it with the following:

B. "5.1 By Agreement . Where a party desires the appointment of a Project Mediator and gives a Notice in Writing to that effect, such notice shall include the names of two qualified individuals who are prepared to act as mediator, ranked in order of preference. Within five Working Days of receiving such a notice, the other party shall deliver a responding notice including the names of two qualified individuals who are prepared to act as mediator, ranked in order of preference. From the names submitted by the parties, the parties shall unanimously appoint a mediator."

C. Appointment of Project Mediator. Add a new clause 5.5 which reads as follows:

D. "5.5 Formal Agreement. When the Project Mediator has been appointed, whether pursuant to clause 5.1 or clause 5.2, the parties and the mediator shall enter into an agreement in writing pursuant to which the terms and conditions of the engagement of the Project Mediator shall be set out. Such agreement shall include an undertaking by the Project Mediator to carry out the mediation pursuant to these Rules and such agreement shall specifically set out the undertaking of the Project Mediator and the parties as to "Costs of the Mediation" (Section 12) and "Privileged Process" (Section 14)."

Representation. Amend clause 8.1 by deleting the last six words of that clause.

## RULES FOR ARBITRATION OF CCDC 2 CONSTRUCTIONS INDUSTRY DISPUTES

1) Location of Arbitration. Add the following as a second sentence to clause 6.1: "Failing agreement by the parties, the arbitrator may select a location for the arbitration within the jurisdiction of the Place of Work, which is convenient to both parties".

2) Single Arbitrator. Delete clause 9.1 and replace it with the following:

"9.1 The arbitration shall be conducted before a single arbitrator who possesses the qualifications specified in Clause 9.5."

3) Appointment Of Arbitrator. Delete Clause 9.2 in its entirety and replace it with the words, "intentionally left blank".

4) Appointment of 3 Arbitrators. Delete Clause 9.4 in its entirety and replace it with, "intentionally left blank".

E. Appointment of Arbitrator. Add a new clause 9.13 which reads as follows:

"9.13 Where the arbitrator has been appointed pursuant to the Section 9, the parties and the arbitrator shall enter an agreement in writing setting out, at minimum, the name of the arbitrator, the undertaking of the arbitrator and the parties to conduct the arbitration pursuant to these Rules and the terms and conditions of engagement of the arbitrator including the fees to be paid and expenses to be reimbursed and any arrangements required to provide for interim payment of fees and/or expenses to the arbitrator."

F. Procedural Meeting. Add the following new sentence to clause 10.2:
"Such written record shall be deemed to be the procedural code for the conduct of the arbitration, subject to any further orders of the arbitrator or of the Court of competent jurisdiction."

G. Powers of the Arbitrator. Delete clause 11.1 and substitute the following:
"Subject to these Rules and subject to the written record described in clause 10.3, the arbitrator may conduct the arbitration in such manner as the arbitrator, acting reasonably, considers appropriate provided that in all events each party shall be treated fairly and given a full opportunity to present its case and respond to the case presented by the other party."

H. Exchange of Statements. Delete clause 13.1(a) and replace it with the following:
"(a) which are relevant to the issues in dispute, and..".

I. Disclosure. Delete clause 13.2 and replace it with the following:
"13.2 The arbitrator may order one or both parties to prepare an affidavit, within a specified time, in which such party deposes under oath that it has made a full and complete listing of documents pursuant to clause 13.1(a) where the arbitrator has reason to believe that one or both parties may not have made full and complete disclosure of the documents relevant to the issues in the arbitration."

J. Add a new clause 16.7 as follows:
"16.7 In the event that a party provides the statement or report of an expert witness pursuant to clause 16.1, the provisions of clauses 16.4 and 16.5 shall apply, with necessary modifications."

K. Hearings and Meetings. Amend clause 13.3 by adding the following language to that clause:
"..unless otherwise agreed by both parties or directed by the arbitrator."

L. Arbitrator Retained Experts. Add clause 16.2(c) as follows:
"(c) provide the party with a written summary of any other information, beyond that described in clauses 16.2(a) and (b), upon which the expert relied in preparing the expert's report."

M. Consolidation, Conducting Together or Consecutively, or Stay of Arbitrations. Amend clause 24.1(a) by adding the following wording to that clause:
"...on the same Project,..".

**END OF SUPPLEMENTARY CONDITIONS**

This page intentionally left blank.

# SECTION 01 11 00
SUMMARY OF WORK

## PART 1 - GENERAL

### 1.1 WORK OF THIS CONTRACT

A. *Work* of this *Contract* comprises the following:
*Kingston Health Sciences Centre - HDH Jeanne Mance Level 0 MDR Phase 2 Infrastructure*

B. Municipal Address:
166 Brock Street, Kingston, Ontario, K7L 5G2

C. Legal Description:
Part Park Lot 1, Selma Block, Part Lots 294 & 295, Original Survey, City of Kingston.

D. The work for *Kingston Health Sciences Centre - HDH Jeanne Mance Level 0 MDR Phase 2 Infrastructure* includes but is not limited to *facilitating the replacement existing steam sterilizers, removal of existing millwork, removal of block wall and ceiling modifications.*

E. A list of the *Contract Documents* can be found in Article A-3 CONTRACT DOCUMENTS of the Agreement between *Owner* and *Contractor*.

F. *Consultant* may furnish additional drawings to assist proper execution of the *Work*. These drawings will be issued for clarification only. Such drawings shall have same meaning and intent as if they were included with plans referred to in *Contract Documents*.

G. The *Drawings* and *Specifications* shall be carefully read by the *Contractor* so that the extent and nature of the work of all trades is understood. All trades shall co-operate and work together, so that the *Work* will fit together and make a complete and satisfactory job in every detail. All work shall be done and materials supplied to complete such work in every detail to the true intent and meaning of the *Drawings*, *Specifications* and any additional details furnished as the *Work* progresses.

### 1.2 SCHEDULE "A" – KEY PERSONNEL

A. Prior to commencement of *Work*, prepare and submit 'Schedule "A" – Key Personnel' identifying *Contractor*'s personnel mentioned below, who will be employed/engaged in performance of the *Work:*
1. Project Manager(s)
2. Superintendent(s)
3. Coordinator(s)
4. Site Supervisor(s)

B. Make submittal in accordance with Section 01 33 00.

### 1.3 DIVISION OF WORK

A. Division of the *Work* among *Subcontractors* and *Suppliers* is solely *Contractor*'s responsibility. *Consultant* and *Owner* assume no responsibility to act as an arbiter to establish subcontract limits between Sections or Divisions of the *Work*.

### 1.4 SPECIFICATIONS LANGUAGE AND STYLE

A. These specifications are written in the imperative mood and in streamlined form. The imperative language is directed to *Contractor*, unless stated otherwise.

B. Complete sentences by reading "shall", " *Contractor* shall", "shall be", and similar phrases by inference. Where a colon (:) is used within sentences and phrases, read the words "shall be" by inference.

C. Fulfill and perform all indicated requirements whether stated imperatively or otherwise.

D. When used in the context of a *Product*, read the word “provide” to mean “supply and install to result in a complete installation ready for its intended use”.

## 1.5 CONTRACT DOCUMENTS FOR CONTRUCTION PURPOSES

A. *Owner* will supply *Contractor* with a complete set of *Contract Documents* in electronic form before commencement of the *Work*. *Contractor* may print hard copies for construction purposes as required.

B. *Owner* will also provide *Contractor* with one hard copy of *Contract Documents* for construction purposes. Additional hard copy sets shall be at *Contractor’s* expense for the cost of printing, handling and shipping.

C. Unauthorized reproduction of *Contract Documents* is prohibited.

## 1.6 DOCUMENTS AT THE SITE

A. Keep the following documents at *Place of the Work*, stored securely and in good order and available to *Owner* and *Consultant* in hard copy form:
   1. Current *Contract Documents*, including *Drawings*, *Specifications* and addenda.
   2. *Change Orders*, *Change Directives*, and *Supplementary Instructions.*
   3. Reviewed *Shop Drawings*, *Product* data and samples.
   4. Field test reports and records.
   5. Construction progress schedule.
   6. Meeting minutes.
   7. Manufacturer’s certifications.
   8. Permits, inspection certificates, and other documents required by authorities having jurisdiction.
   9. Current as-built drawings.
   10. Material Safety Data Sheets (MSDS) for all controlled Products.
   11. ULC firestopping details as needed for performance of the *Work.*

B. In the event that revised *Drawings* are issued after the *Work* has commenced, superseded *Drawings* are to be removed from the site.

## 1.7 CONTRACTOR’S USE OF PREMISES

A. *Contractor*'s access to the work areas will vary and are to be coordinated with the *Owner* prior to commencing work in each space.

B. Use of site is limited to the areas of work unless specific locations for hoarding and storage are indicated on the documents.

C. See Section 00 14 00 – Work Restrictions for further details of additional restrictions on the *Contractor*’s use of the premises.

## 1.8 OWNER-SUPPLIED PRODUCTS

A. *Owner* Responsibilities:
   1. Order and pay for *Owner*-supplied *Products* not already in *Owner*’s possession.
   2. Arrange and pay for delivery of *Owner*-supplied *Products* F.O.B. the site, within time frames required by *Contractor*’s progress schedule. If delivered sooner than required by *Contractor*’s latest progress schedule submitted to *Owner*, arrange and pay for delivery to a temporary storage location and subsequent delivery to the site.
   3. Advise *Contractor* in writing of the value of *Owner*-supplied *Products* for *Contractor*’s insurance purposes.
   4. Arrange for manufacturer's field services.

5. Arrange for delivery of manufacturer's warranties to *Contractor* for inclusion in operation and maintenance manual.

B. *Contractor* Responsibilities:
1. Designate in progress schedule, time frames for delivery of *Owner*-supplied *Products* to the site and for receipt of related submittals. If the site is not ready to receive delivery of *Owner*-supplied *Products* within the time frame indicated in the latest progress schedule submitted to *Owner*, arrange and pay for delivery to a temporary storage location and subsequent delivery to the site.
2. Review all Vendor supplied information and notify *Consultant* of any observed discrepancies or anticipated problems.
3. Ensure that course of construction insurance is adequate to cover *Owner*-supplied *Products*.
4. Take appropriate precautions to protect *Owner*-supplied *Products* from loss or damage.
5. Repair or replace items damaged on site.
6. Connect, adjust, and finish *Owner*-supplied *Products* as specified.
7. Arrange for inspections required by authorities having jurisdiction as specified for connections to *Owner*-supplied-and-installed *Products*.
8. Arrange with Vendor for or perform testing as specified.
9. Workmanship warranty for connections to *Owner*-supplied-and-installed *Products*.

C. Schedule of *Owner*-supplied-and-installed *Products*:
1. Refer to drawings.

## PART 2 - PRODUCTS NOT USED

## PART 3 - EXECUTION NOT USED

## END OF SUMMARY OF WORK

This page intentionally left blank.

# SECTION 01 14 00
WORK RESTRICTIONS

## PART 1 - GENERAL

### 1.1 COVID-19 RESTRICTIONS

A. For COVID-19 screening, all staff volunteers, vendors (including contractors) must enter through designated staff entries (at present time are the Connell 0 or Watkins 2 entrance at KGH site and Sydenham 2 entrance at HDH site) where daily screening will occur for COVID-related risks such as symptoms, travel history and possible contact with affected travellers and/or suspected or confirmed cases of COVID-19. If changes are made to hospital screening procedures, these will be provided to the contractors, who will continue to agree to comply. Reference Attached letter to vendors dated September 1, 2021 Titled "Hospital Policy regarding Vaccination – Contractors and Service Providers." Requirements may change periodically, to which, contractor agrees to comply.

B. Should an outbreak occur at the *Place of the Work*, a no-fault temporary work stoppage of ten (10) *Working Days* will commence, after which *Work* shall resume.

### 1.2 RESTRICTIONS ON USE OF PREMISES

A. All contractors shall be screened when entering any Kingston Health Sciences Centre sites. To access KHSC sites you will need to have a valid hospital issued ID.

B. Comply with smoking restrictions. Smoking is not permitted within the building and only permitted within the designated areas on the building grounds.

C. Confine *Construction Equipment*, *Temporary Work*, storage of *Products*, waste products and debris, and all other construction operations to limits required by laws, ordinances, permits, and *Contract Documents*, whichever is most restrictive. Do not unreasonably encumber *Place of the Work*. The *Owner* reserves the right to remove any and all encumbrances at the *Contractor*'s expense.

D. Move stored products or equipment which interferes with operations of *Consultant*, *Owner* or *Other Contractors*.

E. Obtain and pay for use of additional storage or work areas needed for operations.

F. During the extent of the *Contract* and at any time the *Contractor*'s forces are on the site or within the boundaries of the Hospital, the *Contractor* is required to comply with all Hospital policies. Violation of any aspect of any portion of any listed policy is grounds for investigation, disciplinary action of those involved, and at the discretion of the *Owner*, termination of the *Contract*. A copy of the policies and procedures is available for viewing at the office of the *Owner*.

G. Prior to the start of the *Work*, all construction forces will be required to attend an *Owner*'s orientation session. Approximate time of session is 2 hours and will include Security, Fire Safety, Health and Safety and Infection Control. This session is a requirement of the Hospital and must be completed by any personnel who wish to access the site. Personnel with a current, valid ID Badge are required to take a refresher course prior to commencing work

### 1.3 WORK SEQUENCE

A. During the execution of the *Work*, the existing facility will be occupied and will always remain operational. The *Contractor* shall coordinate the *Work* so that the *Owner* can maintain the normal operation of the facility with little to no disturbance. All temporary partitions, fencing, hoarding and temporary exits will be required to be in place prior to commencing the *Work* and

shall be constructed to meet the requirements of a Section 01 35 33 for additional infection control guidelines and procedures.

B. Refer to Section 01 35 00 Special Procedures for construction phasing requirements.

## 1.4 OWNER OCCUPANCY

A. *Owner* will occupy premises during entire construction period.

B. Cooperate with *Owner* in scheduling operations to minimize disruptions and to facilitate *Owner* usage.

## 1.5 RESTRICTED HOURS OF WORK

A. *Work* may be performed during *Owner*'s normal business hours which are Monday to Friday from 08:00 h to 17:00 h except as otherwise noted or coordinated with the *Owner*.

B. Any interruption involving the shutdown of any component of the existing mechanical / plumbing systems shall be completed between the hours of 18:00 h and 17:00 h weekdays or on the weekend.

C. Allow for hours of work restrictions in construction progress schedule.

## 1.6 NOISY WORK RESTRICTIONS IN OCCUPIED FACILITIES

A. Execute the *Work* with least possible interference or disturbance to occupants, public, and normal use of premises.

B. Schedule excessively noisy work to avoid disturbance to building occupants. Perform excessive noise generating work outside of *Owner*'s business hours, or limited hours within regular business hours of 08;00 h to 17:00 h as stipulated by Owner for areas of work above, below or adjacent to areas containing patient sleep rooms.

C. Use powder actuated devices only with *Consultant*'s written permission.

D. From time to time, the *Contractor* may be asked to stop all work, or temporarily suspend a type of work due to the generation of noise or other disruption to the Hospital. In the event the *Owner* requests the *Contractor* to suspend or stop work and when no other work can reasonably be completed, the *Owner* will reasonably compensate the *Contractor* for the time lost. Compensation will be processed by means of a *Change Order*.

## 1.7 MAINTAINING LIFE SAFETY SYSTEMS IN OCCUPIED FACILITIES

A. Maintain operational life safety systems and public access to exits in occupied areas during all stages of the *Work*.

B. Determine nature and exact locations of existing fire and smoke sensors prior to the commencement of the *Work*. Avoid direct or indirect jarring while working in adjacent areas and exercise caution to avoid triggering these devices.

C. Be responsible for costs incurred by *Owner* on account of false fire alarms activated as a result of the execution of the *Work* without adequate precautions.

## 1.8 SITE SECURITY

A. At the end of each working day, the *Contractor* shall ensure that all access to any area of construction is locked and secure. Provide access keys to *Owner*'s security personnel in case of breach in security. Any tools, materials or property of the *Owner* that is damaged or stolen, due to inadequate security of the work area, shall be replaced at no cost to the *Owner*.

B. Where security may be reduced by the W*ork*, provide temporary means to maintain security. Coordinate necessary protection with the *Owner* and submit to the *Consultant* for review prior to installation.

## PART 2 - PRODUCTS NOT USED

## PART 3 - EXECUTION NOT USED

## END OF WORK RESTRICTIONS

This page intentionally left blank.

Kingston Health Sciences Centre

Centre des sciences de la santé de Kingston

September 1, 2021

**HOSPITAL POLICY REGARDING VACCINATION – CONTRACTORS AND SERVICE PROVIDERS**

Dear Vendors/Contractors:

On August 7, 2021, the Ontario Government released a vaccination directive (https://www.health.gov.on.ca/en/pro/programs/publichealth/coronavirus/docs/directives/vaccination_policy_in_health_settings.pdf) that requires hospitals in Ontario to have COVID-19 vaccination policies in place for, amongst others, contractors and service providers who are on or who in any way access any hospital site.

Ontario's directive was issued in response to data concerning the alarmingly high transmission rate of the Delta variant of COVID-19, and the rapid rise in new cases, infections and hospitalizations as a result. The directive is aimed at protecting vulnerable people, including patients in hospitals as well as the general population. There is evidence that vaccination is one of the best strategies to reduce serious illness or death resulting from COVID-19.

Effective September 7, 2021, any or all contractors or service providers who provide services in, at, or on any of Kingston Health Sciences Centre's sites or buildings ("KHSC Sites"), or who interact with KHSC personnel or patients at any KHSC site must be fully vaccinated against COVID-19.

"Fully vaccinated"[1] means that any such person must have received two doses of a COVID-19 vaccination approved by Health Canada. The second dose of vaccine must have been administered at least 14 full days before access to any KHSC site. No contractor or service provider or any person employed by or connected with any contractor or service provider to KHSC, may enter or be present on any KHSC site, or interact with KHSC staff or patients at a KHSC site unless that person is fully vaccinated.

All contractors or service providers must certify in writing to KHSC that all of their employees, staff and personnel entering KHSC sites are fully vaccinated. Written certification must be

---

[1] For the purpose of this document, "fully vaccinated" means having received the full series of a COVID-19 vaccine or combination of COVID-19 vaccines approved by WHO (e.g. two doses of a two-dose vaccine series, or one does of a single-dose vaccine series), and having received the final dose of COVID-19 vaccine at least 14 days ago.

provided to KHSC on or before September 7, 2021 by email to COVID19VendorQuestionsKHSC@KingstonHSC.ca In accordance with KHSC's policy, any person failing to abide by this notice will be barred from any KHSC site on either a temporary or permanent basis. Contractor and service provider employees, staff and personnel should carry a copy of their vaccination record at all times. KHSC reserves the right to request proof of vaccination upon entry to our facilities. Spot checks will be performed to ensure compliance to the policy.

Additionally, the hospital is expected to report regularly to the Ministry of Health on the vaccination status of its contractors and service providers on site. As such, it is KHSC's expectation that each contractor and/or service provider will be accountable to collate their staff's proof of vaccination and will provide this information to Kingston Health Sciences Centre as required.

For further information, or any questions, please email COVID19VendorQuestionsKHSC@KingstonHSC.ca.

Sincerely,

Elizabeth Bardon
Incident Commander

# SECTION 01 25 00
SUBSTITUTION PROCEDURES

## PART 1 - GENERAL

### 1.1 DEFINITION

A. In this Section "Substitution" means a *Product*, a manufacturer, or both, not originally specified in *Contract Documents* by proprietary name but proposed for use by *Contractor* in place of a *Product*, a manufacturer, or both, specified by proprietary name.

### 1.2 SUBSTITUTION PROCEDURES

A. *Contractor* may propose a Substitution wherever a *Product* or manufacturer is specified by proprietary name(s), unless there is accompanying language indicating that Substitutions will not be considered.

B. *Contractor* may propose a Substitution wherever a *Product* or manufacturer is specified by proprietary name(s) and accompanied by language such as "or equal", "or approved equal", or other similar words. Do not construe such language as an invitation to unilaterally provide a Substitution without *Consultant'*s prior acceptance in writing. Do not order or install any Substitution without a *Supplemental Instruction* or *Change Order*.

C. Provided a proposed Substitution submission includes all of the information specified in this Section under Submission Requirements For Proposed Substitutions, *Consultant* will promptly review and accept or reject the proposed Substitution.

D. *Consultant* may accept a Substitution if satisfied that:
   1. the proposed substitute *Product* is the same type as, is capable of performing the same functions as, interfaces with adjacent work the same as, and meets or exceeds the standard of quality, performance and, if applicable, appearance and maintenance considerations, of the specified Product,
   2. the proposed substitute manufacturer has capabilities comparable to the specified manufacturer, and
   3. the Substitution provides a benefit to *Owner*.

E. If *Contractor* fails to order a specified *Product* or order a *Product* by a specified manufacturer in adequate time to meet *Contractor*'s construction schedule, *Consultant* will not consider that a valid reason to accept a Substitution.

F. If *Consultant* accepts a Substitution and subject to *Owner*'s agreement, the change in the *Work* will be documented in the form of either a *Supplemental Instruction* or *Change Order* as specified in Section 01 26 00 – Contract Modification Procedures.

G. If a Substitution is accepted in the form of a *Supplemental Instruction* or *Change Order*, *Contractor* shall not revert to an originally specified *Product* or manufacturer without *Consultant*'s prior written acceptance.

### 1.3 SUBMISSION REQUIREMENTS FOR PROPOSED SUBSTITUTIONS

A. Include with each proposed Substitution the following information:
   1. Identification of the Substitution, including product name and manufacturer's name, address, telephone numbers, and web site.
   2. Reason(s) for proposing the Substitution.
   3. A statement verifying that the Substitution will not affect the *Contract Price* and *Contract Time* or, if applicable, the amount and extent of a proposed increase or decrease in *Contract Price* and *Contract Time* on account of the Substitution.
   4. A statement verifying that the Substitution will not affect the performance [or warranty] of other parts of the *Work*.

5. Manufacturer's *Product* literature for the Substitution, including material descriptions, compliance with applicable codes and reference standards, performance and test data, compatibility with contiguous materials and systems, and environmental considerations.
6. Product samples as applicable.
7. A summarized comparison of the physical properties and performance characteristics of the specified *Product* and the Substitution, with any significant variations clearly highlighted.
8. Availability of maintenance services and sources of replacement materials and parts for the Substitution, as applicable, including associated costs and time frames.
9. If applicable, estimated life cycle cost savings resulting from the Substitution.
10. Details of other projects and applications where the Substitution has been used.
11. Identification of any consequential changes in the *Work* to accommodate the Substitution and any consequential effects on the performance of the *Work* as a whole. A later claim for an increase to the *Contract Price* or *Contract Time* for other changes in the *Work* attributable to the Substitution will not be considered.

## PART 2 - PRODUCTS NOT USED

## PART 3 - EXECUTION NOT USED

## END OF SUBSTITUTION PROCEDURES

# SECTION 01 26 00
CONTRACT MODIFICATION PROCEDURES

## PART 1 - GENERAL

### 1.1 SCHEDULE OF LABOUR RATES

A. Prior to the first application for payment, submit for the *Consultant*'s review a schedule of labour rates for all trades and classifications of trades, such as journeymen, apprentices, and foremen that will be employed in the *Work*. Provide a breakdown of payroll burden component of labour rates.

B. Labour rates shall reflect the salaries, wages, and benefits paid to personnel in the direct employ of the *Contractor*, *Subcontractors*, and sub-*Subcontractors*, stated as hourly rates, that will be used when:
   1. preparing price quotations for *Change Orders*, and
   2. determining the cost of work attributable to *Change Directives*.

C. Labour rates stated in the schedule of labour rates shall be consistent with rates that will actually be paid, and payroll burden costs that will actually be incurred, in the normal performance of the *Work*, during regular working hours. Labour rates shall not include any additional overhead and profit component.

D. Where collective agreements apply, the labour rates shall not exceed those established by collective agreement.

E. Obtain the *Owner*'s written acceptance of the schedule of labour rates before submitting the first *Change Order* quotation.

F. Accepted schedule of labour rates will be used solely for evaluating *Change Order* quotations and cost of performing work attributable to *Change Directives*.

G. The *Contractor* may request amendments to the accepted schedule of labour rates if changes in the labour rates that will actually be paid, or payroll burden cost that will actually be incurred, in the normal performance of the *Work* can be demonstrated. Obtain the *Owner*'s written acceptance of such changes.

### 1.2 SCHEDULE OF EQUIPMENT RATES

A. Prior to the first application for payment, submit for the *Consultant*'s review a schedule of equipment rates for *Contractor* owned *Construction Equipment*.

B. Equipment rates shall reflect the rates that will be used when:
   1. preparing price quotations for *Change Orders*, and
   2. determining the cost of work attributable to *Change Directives*.

C. Equipment rates stated in the schedule shall be consistent with local equipment rental market rates and shall not include any additional overhead and profit component.

D. Obtain the *Owner*'s written acceptance of the schedule of equipment rates before submitting the first *Change Order* quotation.

E. Accepted schedule of equipment rates will be used solely for evaluating *Change Order* quotations and cost of performing work attributable to *Change Directives*.

F. The *Contractor* may request amendments to the accepted schedule of equipment rates if changes in local equipment rental market rates can be demonstrated. Obtain the *Owner*'s written acceptance of such changes.

## 1.3 VALUATION OF CHANGES BASED ON AGREED UNIT PRICES

A. The *Consultant* may, at the outset of the *Contract* or at any other time, request the *Contractor* to submit unit prices anticipated to be required in valuing changes in the *Work*.

B. The *Contractor* shall submit such unit prices promptly upon request.

C. The unit prices shall be valid for a specified duration.

D. The unit prices shall exclude all fees for overhead and profit and shall be subject to the percentage fees specified in this Section under Fees for Overhead and Profit – Change Orders.

E. The *Consultant* will evaluate the *Contractor*'s quoted unit prices and, if accepted by the *Owner* in writing, the agreed unit prices shall be used to value subsequent proposed changes in the *Work* wherever they are applicable.

## 1.4 METHOD OF CONTRACT PRICE ADJUSTMENT - CHANGE ORDERS

A. Unless otherwise agreed, the adjustment of the *Contract Price* on account of a proposed change in the *Work* shall be based on a quotation for a fixed price increase or decrease to the *Contract Price* regardless of the *Contractor*'s actual expenditures and savings.

B. If unit prices included in the stipulated price contract are applicable to the proposed change, the adjustment of the *Contract Price* shall be based on those unit prices, to the extent they apply. If the actual quantities to which the unit prices apply vary from the estimated quantities by more than 12%, the unit prices shall be subject to negotiation.

C. Unless otherwise agreed, the adjustment of *Unit Prices* affected by a proposed change in the *Work* shall be based on a quotation for an increase or decrease to existing *Unit Prices*, or new *Unit Prices*, as applicable, regardless of the *Contractor*'s actual expenditures and savings.

D. If necessary and unless otherwise agreed, the adjustment of the GMP or the *Target Contract Price* on account of a proposed change in the *Work* shall be based on a quotation for an increase or decrease to the GMP or *Target Contract Price*. The increase or decrease shall include an adjustment to the *Contractor*'s fixed fee, if any, as agreed by the *Owner* and the *Contractor*.

## 1.5 CHANGE ORDER PROCEDURES

A. Upon issuance by the *Consultant* to the *Contractor* of a proposed change in the *Work*, and unless otherwise requested in the proposed change or unless otherwise agreed:
   1. Submit to the *Consultant* a fixed price quotation for the proposed change in the *Work* within 5 days after receipt of the proposed change in the *Work*.
   2. If requested in the proposed change, provide a detailed breakdown of the price quotation including the following to the extent applicable, with appropriate supporting documentation:
      a. Estimated labour costs, including hours and applicable hourly rates based on the accepted schedule of labour rates.
      b. Estimated Product costs, including *Supplier* quotations, estimated quantities and unit prices.
      c. Estimated *Construction Equipment* costs.
      d. Enumeration of all other estimated costs included in the price quotation.
      e. Estimated credit amounts for labour and *Products* not required on account of the proposed change.
      f. Fees, not exceeding the applicable percentages for overhead and profit as specified in this Section.
      g. Where applicable, *Subcontractor* quotations, also including a detailed breakdown of all of the above.
   3. Include in the quotation the increase or decrease to the *Contract Time*, if any, for the proposed change, stated in number of days.
   4. Include in the quotation the number of days for which the quotation is valid.
   5. The quotation will be evaluated by the *Consultant* and the *Owner* and, if accepted by the *Owner*, be documented in the form of a signed *Change Order*.

## 1.6 FEES FOR OVERHEAD AND PROFIT – CHANGE ORDERS

A. Where the *Contractor*'s price quotation for a *Change Order* results in a net increase to the *Contract Price*, the *Contractor*'s entitlement to a fee for overhead and profit in the quotation shall be as follows, as applicable:
   1. For work to be performed by the *Contractor*'s own forces,
      a. If the changes to the *Work* have a value of less than or equal to $50,000, 10% of the *Contractor*'s price quotation before the *Contractor*'s fee is applied
      b. If the changes to the *Work* have a value greater than $50,000, 7.5% of the *Contractor*'s price quotation before the *Contractor*'s fee is applied
   2. For work to be performed by a *Subcontractor*, 5% of the *Subcontractor*'s price quotation including the *Subcontractor*'s fee.

B. Where a *Subcontractor*'s price quotation for a *Change Order* results in a net increase to the *Subcontractor*'s contract price, the *Subcontractor*'s entitlement to a fee for overhead and profit in the quotation shall be as follows, as applicable:
   1. For work to be performed by the *Subcontractor*'s own forces, 15% of the *Subcontractor*'s price quotation before the *Subcontractor*'s fee is applied.
   2. For work to be performed by a sub-*Subcontractor*, 20% of the sub-*Subcontractor*'s price quotation including the sub-*Subcontractor*'s fee.

C. Where the *Contractor*'s or a *Subcontractor*'s price quotation for a *Change Order* results in a net decrease in price before adjustment for fees for overhead and profit, such a price quotation shall be for the net decrease without any adjustment for fees for overhead and profit.

## 1.7 METHOD OF CONTRACT PRICE ADJUSTMENT - CHANGE DIRECTIVES

A. Unless the *Owner* and the *Contractor* reach an earlier agreement on the adjustment to the *Contract Price* by means of a *Change Order* that cancels the *Change Directive*, the adjustment in the *Contract Price* for change carried out by way of a *Change Directive* shall be determined as specified in the *General Conditions* of *Contract* after the change in the *Work* is completed.

## 1.8 CHANGE DIRECTIVE PROCEDURES

A. If a *Change Directive* is issued for a change in the *Work* for which a proposed change was previously issued, but no *Change Order* has yet been signed, the *Change Directive* shall cancel the proposed change and any *Contractor* quotations related to that change in the *Work*.

B. When proceeding with a change in the *Work* under a *Change Directive*, keep accurate records of daily time sheets for labour and *Construction Equipment*, and invoices for *Product* and *Construction Equipment* costs. Submit such records to the *Consultant* daily, until the *Change Order* superseding the *Change Directive* is issued.

## 1.9 FEES FOR OVERHEAD AND PROFIT – CHANGE DIRECTIVES

A. The *Contractor*'s entitlement to a fee for overhead and profit on the *Contractor*'s expenditures and savings attributable to a *Change Directive* shall be as follows, as applicable:
   1. For work performed by the *Contractor*'s own forces, 10% of the *Contractor*'s net increase in costs.
   2. For work performed by a *Subcontractor*, 10% of the sum of the *Subcontractor*'s net increase in costs plus the *Subcontractor*'s fee.

B. A *Subcontractor*'s entitlement to a fee for overhead and profit on the *Subcontractor*'s expenditures and savings attributable to a *Change Directive* shall be as follows, as applicable:
   1. For work performed by the *Subcontractor*'s own forces, 15% of the *Subcontractor*'s net increase in costs.
   2. For work performed by a sub-*Subcontractor*, 10% of the sum of the sub-*Subcontractor*'s net increase in costs plus the sub-*Subcontractor*'s fee.

C. Where a *Change Directive* results in net savings on account of work not required to be performed and a net decrease in the *Contractor*'s or *Subcontractor*'s cost, the net savings to the

*Contractor* or *Subcontractor* shall be calculated without any adjustment for fees for overhead and profit.

D. When a *Change Directive* is ultimately recorded as a *Change Order*, there shall be no additional entitlement to fees for overhead and profit beyond those specified in this article.

**1.10 SUPPLEMENTAL INSTRUCTIONS**

A. The *Consultant* may issue *Supplemental Instructions* to provide clarifications to the *Contract Documents*, provide additional information, or make minor variations in the *Work* not involving adjustment in the *Contract Price* or *Contract Time*.

B. If the *Contractor* considers a *Supplemental Instruction* to require an adjustment in *Contract Price* or *Contract Time*, the *Contractor* shall within ten (10) *Working Days* of the receipt of the *Supplemental Instruction* notify the *Consultant* in writing. If the *Contractor* needs additional information to determine whether a *Supplemental Instruction* involves an adjustment of the *Contract Price* or *Contract Time*, the *Contractor* may issue a written request to the *Consultant* seeking such additional information. Upon receipt of such additional information, the *Contractor* shall, within ten (10) *Working Days* notify the *Consultant* in writing of the opinion that the *Supplemental Instruction* involves an adjustment in the *Contract Price* or the *Contract Time.* Failure to provide written notification within the time stipulated above shall be deemed an acceptance of the *Supplemental Instruction* by the *Contractor* without adjustment to the *Contractor Price* or the *Contract Time.* If written notice is provided as outlined above, the *Contractor* shall not proceed with any work related to the *Supplemental Instruction* pending receipt of a *Change Order*, a *Change Directive*, or, in accordance with the dispute resolution provisions of the *General Conditions* of *Contract*, a *Notice in Writing* of a dispute and instructions to proceed.

## PART 2 - PRODUCTS NOT USED

## PART 3 - EXECUTION NOT USED

## END OF CONTRACT MODIFICATION PROCEDURES

# SECTION 01 29 00
PAYMENT PROCEDURES

## PART 1 - GENERAL

### 1.1 SCHEDULE OF VALUES

A. Prior to the first application for payment, submit for *Consultant*'s review an initial schedule of values. Modify the initial schedule of values if and as requested by *Consultant*. Obtain *Consultant*'s written acceptance of the initial schedule of values prior to the first application for payment.

B. Together with the first and all subsequent applications for payment, submit updated versions of the schedule of values to indicate the values, to the date of application for payment, of work performed and *Products* delivered to *Place of the Work*.

C. Provide the schedule of values in an electronic spreadsheet format that provides for inclusion of the following information:
   1. Identifying information including title and location of the *Work*, name of *Contractor*, number and date of application for payment, and period covered by the application for payment.
   2. A work breakdown structure that is sufficiently detailed and comprehensive to facilitate *Consultant*'s evaluation of applications for payment at an appropriate level of detail. Include separate line items for closeout procedures including closeout submittals, demonstration and training, start-up and testing, and commissioning collectively valued at minimum 5% of *Contract Price*.
   3. Provisions for approved *Change Orders* so that the breakdown amounts indicated in the schedule of values aggregate to the current total *Contract Price*. Also provide for indicating the estimated value of *Change Directives* within the schedule of values, separately from the current total *Contract Price*.
   4. Include a separate line item for *Value Added Taxes* as payable for each application.
   5. For each item in the work breakdown structure, provide as a minimum the following information, under headings as indicated:
      a. Breakdown Amount: A dollar amount, including an appropriate pro rata portion of *Contactor*'s overhead and profit.
      b. Performed to Date: The value of *Work* performed and *Products* delivered to *Place of the Work* up to the date of the application for payment, stated as a percentage of the *Contract Price* and in dollars.
      c. Previously Performed: The value of *Work* performed and *Products* delivered to the *Place of the Work* for which payment has been previously certified, stated in dollars.
      d. Current Period: The value of *Work* performed and *Products* delivered to *Place of the Work* for which *Contractor* is currently applying for payment, stated in dollars.
      e. Balance to Complete: The value of *Work* not yet performed and *Products* not yet delivered to *Place of the Work*, stated in dollars.

### 1.2 CLOSEOUT SUBMITTAL VALUE

A. *The closeout submittal documents described in this Section shall carry a value of the total value of the Contract multiplied by 0.05*. The value of these documents shall be clearly identified as a line item in the Contractor's schedule of values.

B. Payment for closeout submittals will not be authorized until documents are received, reviewed, deemed acceptable and in the possession of the Owner.

C. Since the maintenance of accurate, up-to-date document records have legal ramifications for the operation of the Hospital, should the Contractor fail to provide Closeout Submittal Manuals, in

the described, acceptable format, the Contractor may, at the Owner's discretion, be deemed to be unsuitable to undertake future work of the Owner.

### 1.3 CASH FLOW PROJECTION

A. Prior to the first application for payment submit, for *Consultant*'s review, a forecast of approximate monthly progress payments for each month of the *Contract Time*.

B. Submit revised cash flow forecasts when required due to significant changes in rate of progress of the *Work* or significant changes in the *Contract Price* when requested by *Consultant*.

### 1.4 WORKERS' COMPENSATION CLEARANCE

A. Submit proof of workers' compensation clearance with each application for payment.

### 1.5 STATUTORY DECLARATIONS

A. Submit a statutory declaration in the form of CCDC 9A – Statutory Declaration of Progress Payment Distribution by *Contractor* with each application for payment except the first.

### 1.6 PAYMENT FOR PRODUCTS STORED OFF SITE

A. *Owner* may, due to extraordinary circumstances and at *Owner*'s sole discretion, make payments for *Products* delivered to and stored at a location other than *Place of the Work*, subject to:
   1. a request submitted by *Contractor* in writing, with appropriate justification, and
   2. whatever conditions *Owner* or *Consultant* may establish for such payments, as required to protect *Owner*'s interests.

### 1.7 RELEASE OF HOLDBACK

A. See General Condition 5.4 SUBSTANTIAL PERFORMANCE OF THE WORK AND PAYMENT OF HOLDBACK and associated Supplementary Conditions in 3.23 of 00 73 00 Supplementary Conditions.

## PART 2 - PRODUCTS NOT USED

## PART 3 - EXECUTION NOT USED

## END OF PAYMENT PROCEDURES

# SECTION 01 31 19
PROJECT MEETINGS

## PART 1 - GENERAL

### 1.1 CONSTRUCTION START-UP MEETING

A. Promptly after *Contract* award, *Consultant* will establish the time and location of a construction start-up meeting to review and discuss administrative procedures and responsibilities. *Consultant* will notify *Contractor* at least 5 *Working Days* before the meeting.

B. Senior representatives of *Owner*, *Consultant*, subconsultants, and *Contractor*, including *Contractor*'s project manager and site superintendent, and major *Subcontractors*, shall be in attendance.

C. *Consultant*'s representative will chair the meeting and record and distribute the minutes.

D. Agenda will include following:
1. Appointment of official representatives of *Owner*, *Contractor*, *Subcontractors*, *Consultant*, and subconsultants.
2. *Project* communications.
3. *Contract Documents* for construction purposes.
4. Documents at the site.
5. *Contractor*'s use of premises.
6. *Owner*-supplied *Products*.
7. Work restrictions.
8. Substitution procedures.
9. *Contract* modification procedures.
10. Payment procedures.
11. Construction progress meetings.
12. Construction progress schedule, including long lead time items.
13. Submittals schedule and procedures.
14. Infection Control.
15. Quality requirements, including testing and inspection procedures.
16. Contractor's mobilization.
17. Temporary utilities.
18. Existing utility services.
19. Construction facilities.
20. Temporary barriers and enclosures.
21. Temporary controls.
22. Field engineering and layout of work.
23. Site safety.
24. Site security.
25. Cleaning and waste management.
26. Closeout procedures and submittals.
27. Commissioning.
28. Other items.

### 1.2 CONSTRUCTION PROGRESS MEETINGS

A. Schedule regular construction progress meetings for the duration of the *Work*. Frequency and schedule of meetings to be determined between *Contractor*, *Consultant*, and *Owner*, but shall occur at least biweekly, or more often as deemed necessary. *Contractor* shall prepare meeting agendas, chair the meetings, and record and distribute the minutes.

B. Arrange for and provide physical space for meetings, unless Owner agrees to provide space within existing facilities.

C. *Contractor* shall record in the meeting minutes significant decisions and identify action items and action dates by attendees or the parties they represent.

D. *Contractor* shall distribute copies of minutes within three (3) Working Days after each meeting to meeting attendees and any affected parties who may not be in attendance.

E. Ensure that *Subcontractors* attend as and when appropriate to the progress of the *Work*.

F. Agenda for each meeting shall include the following, as a minimum:
   1. Approval of minutes of previous meeting.
   2. Work progress since previous meeting.
   3. Field observations, including any problems, difficulties, or concerns.
   4. Construction progress schedule.
   5. Submittals schedule.
   6. Proposed changes in the *Work*.
   7. Requests for information.
   8. Site safety issues.
   9. Infection Control issues.
   10. Other business.

## PART 2 - PRODUCTS NOT USED

## PART 3 - EXECUTION NOT USED

## END OF PROJECT MEETINGS

# SECTION 01 32 00
CONSTRUCTION PROGRESS DOCUMENTATION

## PART 1 - GENERAL

### 1.1 SUMMARY

A. This Section specifies *Contractor*'s responsibilities for preparation and submission of schedules and other documentation related to tracking construction progress.

B. The purpose of submitting progress schedules is to:
   1. inform *Owner* and *Consultant* of actual progress versus planned progress, and
   2. provide assurance that scheduling issues are being proactively identified and addressed in a timely manner, and that planned progress is being maintained as closely as possible.

### 1.2 SCHEDULES REQUIRED

A. Submit schedules as follows:
   1. Construction Phasing Schedule.
   2. Construction Progress Schedule.
   3. Submittal Schedule for Shop Drawings and Product Data.
   4. Submittal Schedule for Samples.
   5. Submittal Schedule for timeliness of Owner-furnished Products.
   6. Cash flow Schedule.

### 1.3 GENERAL SUBMISSION

A. Submit initial format of schedules within ten (10) *Working Days* after award of *Contract*.

B. Submit a electronic document in Portable Document Format (PDF) copy to be distributed by *Consultant*.

C. *Consultant* will review schedule and return reviewed copy within ten (10) days after receipt.

D. Resubmit finalized schedule within seven (7) days after return of reviewed copy.

E. Submit revised progress schedule with each application for payment, indicating all schedule modifications to date.

F. Distribute copies of revised schedule to:
   1. Job site office.
   2. Subcontractors.
   3. Consultants.
   4. Owner
   5. Authority Having Jurisdiction.

G. Instruct recipients to report to Contractor within ten (10) days, any problems anticipated by timetable shown in schedule.

### 1.4 CONSTRUCTION PROGRESS SCHEDULE

A. Format and Content:
   1. Prepare schedule in the form of a Critical Path Method (CPM) Gantt chart using appropriate scheduling software.
      a. Provide a separate bar for each major item of work trade or operation.
      b. Split horizontally for projected and actual performance.
      c. Provide horizontal time scale identifying each week.
      d. Format for listings: chronological order of start of each item of work.
      e. Identification of listings: by systems description.

2. Provide a work breakdown structure identifying key activities, work packages, and major milestones, including long delivery *Products*, inspection and testing activities, anticipated service and utility shutdown dates and durations, commissioning, preparation and review of mock-ups, shutdown or closure activities, delivery of *Owner* supplied Products, *Owner* performed work, demonstration and training activities, and similar items, at a sufficient level of detail to effectively manage construction progress.
3. Indicate milestone dates for *Ready-for-Takeover* and *Substantial Performance of the Work*.

B. Submission:
1. Prior to site mobilization, submit initial schedule to *Owner* and *Consultant* for their review and acceptance.
2. Submit schedule via e-mail as .pdf files, and as a hard copy.
3. *Consultant* will review format and content of initial schedule and request necessary changes, if any, within 10 *Working Days* after receipt.
4. If changes are required, resubmit finalized initial schedule within 5 *Working Days* after return of review copy.
5. Submit updated progress schedule monthly to *Owner* and *Consultant*, indicating actual and projected start and finish dates with report date line and progress.

## 1.5 SUBMITTALS SCHEDULE

A. Format and Content:
1. Prepare schedule identifying all required *Shop Drawing*, *Product* data, sample submissions, and including samples required for testing.
2. Prepare schedule in electronic format.
3. Provide a separate line for each required submittal, organized by *Specifications* section names and numbers, and further broken down by individual *Products* and systems as required.
4. For each required submittal, show planned earliest date for initial submittal and latest date for return of reviewed submittal without causing delay.
5. Allow time in schedule for resubmission of submittals, should resubmission be necessary.
6. Include dates when submittals delivery will be required for Owner-furnished products.

B. Submission:
1. Submit initial schedule to *Consultant* within 5 *Working Days* after *Contract* award.
2. Submit schedule via e-mail as .pdf files.
3. Consultant will review format and content of initial schedule and request necessary changes, if any, within 5 *Working Days* after receipt.
4. If changes are required, resubmit finalized schedule within 5 *Working Days* after return of review copy.
5. Submit updated submittals schedule monthly to *Owner* and *Consultant*..

## 1.6 SCHEDULE MANAGEMENT

A. A schedule submitted as specified and accepted by *Consultant* shall become the baseline schedule and shall be used as the baseline for updates.

B. At each regular progress meeting, review and discuss current construction progress and submittals schedules with *Consultant* and *Owner*, including activities that are behind schedule and planned measures to regain schedule slippage in key areas on or near the critical path. Schedule to be updated by *Contractor* following review by *Consultant*.

C. Activities considered behind schedule are those with start or completion dates later than the dates shown on the baseline schedule.

## 1.7 DAILY REPORTS/DAILY LOGS

A. The *Contractor* shall cause its supervisor, or such competent person as it may delegate, to prepare a daily log or diary reporting on weather conditions, work force of the *Contractor*, *Subcontractors*, Suppliers and any other forces on site and also record the general nature of Project activities. Such log or diary shall also include any extraordinary or emergency events which may

occur and also the identities of any persons who visit the site who are not part of the day-to-day work force.

B. The *Contractor* shall also maintain records, either at its head office or at the job site, recording manpower and material resourcing on the Project, including records which document the activities of the *Contractor* in connection with GC 3.4, and comparing that resourcing to the resourcing anticipated when the most recent version of the schedule was prepared pursuant to GC 3.4.

**1.8 RECORDING ACTUAL SITE CONDITIONS ON AS-BUILT DRAWINGS**

A. Obtain a hard copy set of construction *Drawings* for the purpose of creating as-built drawings. Record information and maintain as-built drawings in clean, dry and legible condition.

B. Clearly label each drawing as "AS-BUILT DRAWING". Record information concurrently with construction progress. Do not conceal *Work* until required information is recorded.

C. Record actual construction including:
1. Measured depths of elements of foundation in relation to finish first floor datum.
2. Measured horizontal and vertical locations of underground utilities and appurtenances, referenced to permanent surface improvements.
3. Measured locations of pipes, ducts, conduits, outlets, fixtures, access panels, and appurtenances, referenced to visible and accessible features of construction.
4. Field changes of dimension and detail.
5. Changes made by *Change Orders* and *Supplemental Instructions*
6. References to *Shop Drawings*, where *Shop Drawings* show more detail.

D. Do not use as-built drawings for construction purposes.

**1.9 PROGRESS PHOTOGRAPHS**

A. Arrange for periodic digital photography to document and provide a photographic record of the progress of the *Work*.

B. Arrange for final photographs to be taken by a professional photographer at discretion of *Owner*.

C. Identify each photograph by project name and date taken.

D. Submission: Submit .jpg or .bmp format files in fine resolution via e-mail or via project web site.

E. Do not use progress or any other *Project* photographs for promotional purposes without *Owner*'s written consent.

F. Final photograph submission shall be submitted on one or more compact disc(s) or USB flash memory drive. Identify media with project name and number. Media is to be organized in accordance of date of monthly submission, in same format. Submission of media shall form part of the Closeout Submittal manual, specified in Section 01 78 00.

## PART 2 - PRODUCTS NOT USED

## PART 3 - EXECUTION NOT USED

## END OF CONSTRUCTION PROGRESS DOCUMENTATION

This page intentionally left blank.

# SECTION 01 33 00
SUBMITTAL PROCEDURES

## PART 1 - GENERAL

### 1.1 ADMINISTRATIVE

A. Submit specified submittals to *Consultant* for review. Submit with reasonable promptness and in orderly sequence so as to not cause delay in the *Work*. Failure to submit in ample time is not considered sufficient reason for an extension of *Contract Time* or for *Product* substitutions or other deviations from the *Drawings* and *Specifications*.

B. Where required by authorities having jurisdiction, provide submittals to such authorities for review and approval.

C. Do not proceed with *Work* affected by a submittal until review is complete.

D. Present *Shop Drawings*, *Product* data, and samples in SI metric units. Where items or information is not produced in SI Metric units, converted values are acceptable.

E. Review submittals, provide verified field measurements where applicable, and affix *Contractor*'s review stamp prior to submission to *Consultant*. *Contractor*'s review stamp represents that necessary requirements have been determined and verified, and that the submittal has been checked and coordinated with requirements of the *Work* and *Contract Documents*.

F. Notify *Consultant* in writing, at time of submission, identifying deviations from requirements of *Contract Documents* stating reasons for deviations.

G. Verify field measurements and that affected adjacent work is coordinated.

H. Submittals not meeting specified requirements will be returned with comments.

I. Reproduction of construction *Drawings* to serve as background for *Shop Drawings* is permitted. If construction *Drawings* are used for this purpose, remove references to *Consultant*.

J. Do not propose Substitutions or deviations from *Contract Documents* via *Shop Drawing*, *Product* data and sample submittals.

K. *Contractor*'s responsibility for errors and omissions in submission is not relieved by *Consultant*'s review of submittals.

L. *Contractor*'s responsibility for deviations in submission from requirements of *Contract Document*s is not relieved by *Consultant* review.

M. Keep one reviewed copy of each submission on site.

### 1.2 SHOP DRAWINGS AND PRODUCT DATA

A. Indicate *Products*, methods of construction, and attachment or anchorage, erection diagrams, connections, explanatory notes and other information necessary for completion of the *Work*.

B. Where *Products* attach or connect to other *Products*, indicate that such items have been coordinated, regardless of Section under which adjacent items will be supplied and installed. Indicate cross-references to *Drawings*, *Specifications* and other already reviewed *Shop Drawings*.

C. Accompany submittals with a transmittal information including:
   1. Date.
   2. *Project* title and number.
   3. *Contractor*'s name and address.
   4. Identification of each submittal item and quantity.
   5. Other pertinent data.

D. *Shop Drawing* submittals shall include:
   1. Date and revision dates.
   2. *Project* title and number.
   3. Name and address of:
      a. Subcontractor.
      b. Supplier.
      c. Manufacturer.
   4. *Contractor*'s stamp, date, and signature of *Contractor*'s authorized representative responsible for *Shop Drawing* review, indicating that each *Shop Drawing* has been reviewed for compliance with *Contract Documents* and, where applicable, that field measurements have been verified.
   5. Details of appropriate portions of the *Work* as applicable:
      a. Fabrication.
      b. Layout, showing dimensions, including identified field dimensions, and clearances.
      c. Setting or erection details.
      d. Capacities.
      e. Performance characteristics.
      f. Standards.
      g. Operating weight.
      h. Wiring diagrams.
      i. Single line and schematic diagrams.
      j. Relationships to other parts of the *Work*.

E. *Product* data submittals shall include material safety data sheets (MSDS) for all controlled Products.

F. Submit one (1) hard copy and electronic copy of *Shop Drawings* where specified in the technical Specifications.

G. Submit one (1) hard copy and electronic copy of *Product* data sheets or brochures where specified in the technical Specifications.

H. Where a submittal includes information not applicable to the *Work*, clearly identify applicable information and strike out non-applicable information.

I. Supplement standard information to include details applicable to *Project*.

J. Allow ten (10) *Working Days* for *Consultant*'s review of each submittal .

K. If upon *Consultant*'s review no errors or omissions are discovered, or if only minor corrections are required as indicated, submittal will be returned and fabrication or installation of *Work* may proceed.

L. If upon *Consultant*'s review significant errors or omissions are discovered, a so noted copy will be returned for correction and resubmission. Do not commence fabrication or installation.

M. *Consultant*'s notations on submittals are intended to ensure compliance with *Contract Documents* and are not intended to constitute a change in the *Work* requiring change to the *Contract Price* or *Contract Time*. If *Contractor* considers any *Consultant*'s notation to be a change in the *Work*, promptly notify *Consultant* in writing before proceeding with the *Work*.

N. Resubmit corrected submittals through same procedure indicated above, before any fabrication or installation of the *Work* proceeds. When resubmitting, notify *Consultant* in writing of any revisions other than those requested by *Consultant*.

## 1.3 SAMPLES

A. Submit samples for *Consultant*'s review in duplicate where specified in the technical *Specifications*. Label samples as to origin, *Project* name, and intended use.

B. Deliver samples prepaid to *Consultant*'s business address.

C. Notify *Consultant* in writing of any deviations in samples from requirements of *Contract Documents*.

D. Where a required colour, pattern or texture has not been specified, submit full range of available *Products* meeting other specified requirements.

E. *Consultant* selection from samples is not intended to change the *Contract Price* or *Contract Time*. If a selection would affect the *Contract Price* or *Contract Time*, notify *Consultant* in writing prior to proceeding with the *Work*.

F. Resubmit samples as required by *Consultant* to comply with *Contract Documents*.

G. Reviewed and accepted samples will establish the standard against which installed *Work* will be reviewed.

## PART 2 - PRODUCTS NOT USED

## PART 3 - EXECUTION NOT USED

## END OF SUBMITTAL PROCEDURES

This page intentionally left blank.

# SECTION 01 35 00
SPECIAL PROCEDURES

## PART 1 - GENERAL

### 1.1 REFERENCES

A. Ontario Ministry of the Solicitor General, Office of the Fire Marshall Guidelines for Maintaining fire Safety during Construction in Existing Buildings.

B. CSA Z317.13 Infection Control during Construction or Renovation of Health Care Facilities.

C. Kingston Hospitals, "Infection Control Risk Assessment"

D. Kingston Hospitals, Infection Control Manual, Prevention of Infections, Construction, Renovation and Maintenance, Section No. IC 2-70.01.

### 1.2 GENERAL - CONSTRUCTION PHASING

A. The *Work* of this *Contract* is divided into phases as requested by the facility.

B. The phasing drawings indicate a conceptual construction sequence and the relationship between phases. This information is provided to the *Contractor* as a basis of information from which the *Contractor* shall develop his construction schedule, which will reflect their interpretation of the actual duration of each phase.

C. The intent of phasing and construction sequence is to maintain operation and access to all areas of the Hospital outside of the area of construction as necessary to provide uninterrupted medical and support services. The Hospital will remain in full operation throughout the construction of the *Work*.

D. The phase sequence does not describe the construction process in its entirety or describe all construction consequences of the phase sequence. It remains the *Contractor*'s sole responsibility to schedule all aspects of the construction within the general requirements described herein and as required by all codes, standards and governing regulations. This includes provisions for temporary fire separations and temporary exiting requirements and temporary building services.

E. Areas of construction shall be fully separated from occupied spaces by temporary partitions constructed in accordance with the requirements indicated in Sections 01 35 33 and 01 56 00.

F. The *Work* for each phase may include mechanical and electrical work outside the boundaries shown on the phasing drawings to complete construction and ensure proper functioning of all building systems for that area.

G. Note that due to the nature of the phases, it may be necessary for the *Contractor* to adjust, test, balance, and/or obtain approvals from authorities a number of times in any one area. All hospital systems including but not limited to HVAC, medical gases, fire alarm, sprinkler, water, electrical distribution systems must be completed in operation in accordance with existing conditions and in accordance with the requirements of authorities having jurisdiction at all times. At the end of each phase the hospital systems must be maintained in accordance with requirements outlined in the *Contract Documents* and shall be in accordance with requirements of authorities having jurisdiction.

H. Nothing in this specification shall be construed as infringing on the *Contractor*'s right and responsibility to control the *Work*, including the sequence of construction operations, in accordance with the General Conditions of the *Contract*.

## 1.3 DEFINITIONS

A. The following terms and definitions describe the occupancy conditions under which the *Work* is to be performed in the various areas within the building. Any given area within the building may be classified according to one or several of the following definitions.

B. Any single phase of the *Work* may involve one or several of the occupancy conditions defined below.

C. Joint Occupancy - At areas designated "Joint Occupancy", perform the *Work* indicated for the area so designated while the area is occupied by Hospital personnel or patients.
   1. In all "Joint Occupancy" renovation areas, protect Hospital personnel, patients, the public and existing equipment from dust, materials, tools, etc. associated with the construction environment.
   2. The *Contractor* shall keep these jointly occupied area(s) clear, clean, and free of loose debris, construction materials and partially installed work that would create a safety hazard or interfere with the Hospital personnel or patients.
   3. The *Contractor* shall leave these jointly occupied area(s) clean at the end of each work shift.
   4. Joint Occupancy areas include: Existing Stairwells, Areas of pipe, conduit, duct routing outside of designated construction zone or as specified in *Contract Documents*.

D. Vacant Areas - At areas designated "Vacant areas", complete the *Work* indicated for the area so designated without the presence of Hospital personnel and/or patients.
   1. In area(s) of limited work, the *Contractor* shall protect existing equipment from the hazards of dust, materials, tools, etc. associated with construction.

E. Room-By-Room Basis or Occupied - At areas designated as "Room-by-Room or Occupied" basis the *Contractor* shall complete the *Work* in one room of the area prior to starting work in a subsequent room. Where rooms are also designated as Jointly Occupied or Vacant Areas, the *Contractor* shall perform the *Work* in accordance with the requirements specified for the particular occupancy condition.
   1. Occupied Areas directly above or below a "Vacant Area" that may be directly or indirectly affected by the *Work*.

F. Egress: means of egress to satisfy authorities having jurisdiction from occupied areas are to be maintained throughout the duration on the *Project*. The *Contractor* is to provide a detailed plan for egress including a projected path of egress to be maintained at all times during construction.

G. Fire Separations and Temporary Partitions: Existing fire separations are to be maintained throughout the duration of the *Project*. Temporary partitions at boundaries of major areas of work as noted in Phasing Plans and are to be constructed to meet the requirements of Section 01 56 00 and 01 35 33. *Contractor* to determine quality and locations for temporary protection throughout the *Project* at all other areas in accordance with Section 01 35 33. All existing walls to be used as temporary partitions during phasing are to be extended and sealed to underside of structure above to provide one hour fire rating. Firestop around all services as required. Temporary partitions as noted in Phasing Plans are for reference only. *Contractor* is to coordinate locations of temporary partitions and submit plans for approval by authorities having jurisdiction.

## 1.4 GENERAL PHASING REQUIREMENTS

A. Take all necessary measures to conform the requirements of Fire Marshall Guidelines for Maintaining fire Safety during Construction and renovation in Existing Buildings.

B. All areas of work are to be separated from adjacent spaces as required by Section 01 35 33. Construct temporary barriers and enclosures in accordance with Section 01 56 00 and provide negative pressure isolation to area of work at all times. Temporary barriers and enclosures are to remain in place until the completion of each phase and shall be removed only upon receipt of written approval of the *Owner*'s Infection Control Practitioner.

C. Refer to Section 01 14 00 for specific work restrictions in addition to those restrictions specified herein.

D. Complete all preparatory work for each phase to the satisfaction of the Hospital's Infection Control Practitioner and in accordance with the *Contract Documents* before commencing the actual on-site construction work of the phase.
   1. Provide temporary power, ventilation, data and telephone etc. to areas affected by any given Phase or construction in accordance with Section 01 51 00.
   2. Perform preparatory work without interfering with the operations of affected areas.
   3. Work in Phases or areas affected by phased renovations that are complete prior to the completion of the new central medical gas, fire alarm, smoke venting/control panel are to be temporarily connected to the existing panels until such time that the new central panel is commissioned and supervised 24 hrs a day. Testing and Verification to be completed by the *Contractor* for all temporary work.

E. Install construction barriers and provide negative air pressure in all construction zones in accordance with Sections 01 35 33 and 01 52 00. Barriers must remain in place until the completion of that phase.

F. The *Owner* reserves the right to amend the work of any phase as required in a manner that best serves the interest and operation of the hospital.

G. *Contractor* shall perform all work in or adjacent to occupied areas in such a manner to ensure:
   1. The continuous and uninterrupted use of the occupied areas, including the applicable mechanical and electrical systems serving these areas.
   2. The protection of patients, personnel and the general public in occupied areas from the hazards and dust associated with a construction environment.
   3. The work areas are to be kept clear, clean and free of loose debris, construction materials and partially installed work which would create a safety hazard or interfere with patient and personnel duties and traffic. The *Contractor* shall sweep the areas clean at the end of each work day and make every effort to keep dust and noise to a minimum at all times. Refer to Section 01 74 00.

H. Complete the *Work* associated with each phase and have the *Owner* accept the *Work*, prior to the *Contractor* proceeding to the next scheduled phase in each sequence of work, all in accordance with the *Contract Documents*.

I. Incorporate the sequence of work and duration of the phasing into the Construction Progress Schedule.

J. Two weeks (14 calendar days) prior to completing work in any phase, notify the *Owner* in writing of completion date for the phase currently underway. Do not begin work in any subsequent phase without approval from the *Owner*.

K. Where newly finished space is to be occupied prior to completion of building, provide all necessary measures for partial occupancy. Include time requirements for inspections and partial occupancy permits by authorities having jurisdiction.

L. Maintain all existing nurse call systems and paging systems in operation during the *Work*. Connect new nurse call system and paging system into existing as work progresses without interruption of systems operation.

M. The existing building services (water/sanitary/storm) must remain operational until new connections are provided. Alternatively, the contractor can temporarily re-route the services until new connections are completed.

N. Ensure all reasonable measures are taken at all times to maintain weatherproof enclosures to existing locations adjacent to areas of work.

O. The *Contractor* shall include for testing, commissioning and balancing/rebalancing of central systems in phases to match the phased occupancy.
   1. Mechanical *Subcontractor* to engage a water and air balancer to adjust the systems as indicated on the drawings at the end of each phase. Prior to demolition, balancer to confirm air flows and water flow rates on all floors within the hospital served by the affected systems.

The water and air balancer is to ensure that the other areas are not affected by the work being performed on level 4. A check of all systems is to be completed at the end of each phase on other levels to ensure that the work is not adversely affecting these other areas.

P. General Notes:
   1. It is the desire of the *Owner* to complete construction in the phased order as described below. Time is of the essence to complete the project in an expeditious manner.
   2. The space where construction is to take place is in a working MDR area and will remain in use by the hospital during the construction.
   3. The contractor is to coordinate phasing of all work and to preform work in a manner to allow operation and use of the facility to continue throughout the construction.
   4. The following areas of work as indicated on the drawings as suggested Phases.
      a. Phase 1: Removal of Fixed millwork/patch and repair floor along south walls.
      b. Phase 2: Removal of Fixed millwork/patch and repair floor along west walls.
      c. Phase 3: Removal of block wall and millwork along south wall including ceiling work.
      d. Phase 4: Replacement of ceiling tiles.
      e. Phase 5: Sterilizer 1 replacement
      f. Phase 6: Sterilizer 2 replacement

Q. Where temporary interior hoarding is aligned with existing partitions, ensure hoarding is completed to U/S of structure above and is compliant with required fire ratings as noted in the contract documents. Ensure means of egress as required by the Ontario Building Code throughout all phases of work.

R. Shut downs in order to facilitate final connections into the active systems are to be minimized. The mechanical contractor is to run all distribution piping within an area prior to making final connections to the active systems.

## 1.5 SCHEDULE SHUTDOWNS

A. Owner will have a reduction in space use and workload in the space July 3rd, 2023 – July 7th, 2023

B. Owner will have a reduction in space use and workload in the space August 7th, 2023 – August 11th, 2023

C. Sterilizer Shutdown
   1. Each sterilizer is to be completed separately always keeping one sterilizer in operation. Shutdown dates as listed below.
      a. June 30th, 2023, @ 21:00hours
      b. August 4th, 2023, @ 21:00hours
   2. Replacement of sterilizers to be completed by the following dates.
      a. July 10th, 2023 @ 06:00hours
      b. August 14th, 2023 @ 06:00hours

## 1.6 PHASING PLAN

A. For each phase, the *Contractor* is to submit a detailed phasing schedule detailing the conditions under which the work will be performed, including but not necessarily limited to the items in the following phase outline and the project phasing requirements of the *Contract Documents*. Do not commence the *Work* of any phase until the *Owner* has reviewed and accepted the plan.

B. Phasing outline shall address the following:
   1. Relocation of operations and/or equipment by *Owner* and/or *Contractor*.
   2. Phase Area:
      a. Occupancy.
      b. Access Constraints.
      c. Time Constraints.
   3. Preparatory Work:
      a. Construction hoarding/barriers.
      b. Exterior Closures.

   c. Work completed in previous phases.
4. Affected contiguous spaces (above, below, beside):
   a. Occupancy.
   b. Access Constraints.
   c. Time Constraints.
5. Construction access for personnel, materials and equipment
6. Construction access for the removal of debris.
7. Hospital traffic patterns:
   a. Vehicular access.
   b. Staff, visitor and patient access.
8. Describe extent of new construction and particular requirements that may apply.
9. Sequencing requirements.
10. Access to exits.
11. Exits.
12. Life Safety.
13. Building Security.
14. Mechanical and electrical work.

## PART 2 - PRODUCTS NOT USED

## PART 3 - EXECUTION NOT USED

## END OF SPECIAL PROCEDURES

This page intentionally left blank.

# SECTION 01 35 30
HEALTH AND SAFETY REQUIREMENTS

## PART 1 - GENERAL

### 1.1 REFERENCES

A. Canadian Standards Association (CSA)
   1. CSA S350-M1980 (R2003), Code of Practice for Safety in Demolition of Structures.

B. Occupational Health and Safety Act and Regulations for Construction Projects, R.S.O. 1990.

C. Construction Projects - (Ontario Regulation 213/91 as last amended by O.Reg 426/21).

D. WHMIS (Ontario Regulation 860).

E. Ontario Regulations related to designated substances (Ontario Regulations 835-846).

F. Canadian Labour Code - Part Two.

G. Bill C-45, An Act to amend the Criminal Code (criminal liability of organizations).

H. Kingston General Hospital Policies and Procedures.

### 1.2 MINISTRY OF LABOUR REQUIREMENTS DURING COVID-19

A. *Contractors* shall be familiar and implement the current construction safety requirements during COVID-19 as mandated by Ministry of Labour such as, but not limited to:
   1. enabling greater distances between workers by staggering shifts if necessary,
   2. hand hygiene,
   3. restricting site numbers,
   4. limiting elevator usage,
   5. a focus on cleaning high-touch areas like door handles and hoists,
   6. tracking and monitoring workers,
   7. posting site sanitization, and
   8. work schedules.

B. If the Ministry of Labour requirements are updated, the *Contractor* will review and amend their plan as necessary – resubmitting them to the *Owner* and *Consultant* for review.

### 1.3 SUBMITTALS

A. Make submittals in accordance with Section 01 33 00.

B. Submit site-specific Health and Safety Plan within 7 days after date of Notice to proceed and prior to commencement of *Work*. Health and Safety Plan must include:
   1. Site specific safety hazard assessment.
   2. Safety and health risk or hazard analysis for site tasks and operation found in work plan.

C. Submit Construction Safety Checklists after completion.

D. Submit copies of reports or directions issued by Federal and Provincial health and safety inspector.

E. Submit copies of incident and accident reports.

F. Submit to *Consultant* with Material Safety Data Sheets (MSDS).

G. Submit personnel training requirements including:
   1. Names of personnel and alternates responsible for site safety and health, hazards present on site, and use of personal protective equipment.

H. *Consultant* and *Owner* will review *Contractor*'s site-specific Health and Safety Plan and provide comments to *Contractor* within 5 days after receipt of plan. Revise plan as appropriate and resubmit plan to *Consultant* within 5 days after receipt of comments from *Consultant*.

I. On-site Contingency and Emergency Response Plan: address standard operating procedures to be implemented during emergency situations.

**1.4 FILING OF NOTICE**

A. File Notice with Provincial authorities prior to commencement of *Work*.

**1.5 WORK PERMIT**

A. Obtain building permit related to project prior to commencement of *Work*.

**1.6 SAFETY ASSESSMENT**

A. Perform *Place of the Work* specific safety hazard assessment related to the *Project*.

**1.7 MEETINGS**

A. Pre-construction meetings: attend health and safety pre-construction meeting.

B. All site personnel are required to attend the *Owner*'s Fire Safety training program prior to commencement of personnel working on the site. Approximately 1 hour per worker as required for the training session.

**1.8 REGULATORY REQUIREMENTS**

A. Comply with specified standards and regulations to ensure safe operations at sites containing hazardous or toxic materials.

**1.9 GENERAL REQUIREMENTS**

A. Develop written site-specific Health and Safety Plan based on hazard assessment prior to commencing *Work* and continue to implement, maintain, and enforce plan until final demobilization from *Place of the Work*. Health and Safety Plan must address *Project* specifications.

B. Relief from, or substitution for, any portion or provision of minimum Health and Safety Guidelines specified herein, or reviewed site-specific Health and Safety Plan must be submitted to *Consultant* in writing. *Consultant* will respond in writing, either accepting or requesting improvements.

**1.10 RESPONSIBILITY**

A. Be responsible for safety of persons and property on-site and for protection of persons off-site and environment to extent that they may be affected by conduct of *Work*.

B. Comply with safety requirements of *Contract Documents*, applicable federal, provincial, and local statutes, regulations, and ordinances, and with site-specific Health and Safety Plan, and enforce compliance with employees.

C. Duties of employers:
   1. An employer shall ensure that:
      a. the prescribed equipment, materials and protective devices are provided;
      b. the equipment, materials and protective devices provided by the employer are maintained in good condition;
      c. the measures and procedures prescribed are carried out in the workplace;
      d. the equipment, materials and protective devices provided by the employer are used as prescribed; and

e. a floor, roof, wall, pillar, support or other part of a workplace is capable of supporting all loads to which it may be subjected without causing the materials therein to be stressed beyond the allowable unit stresses established under the Building Code Act.

**1.11 COMMUNICATION REQUIREMENTS**

A. Comply with Ontario Health and Safety Act.

B. Comply with Canada Labour Code, Canada Occupational Safety and Health Regulations.

C. Provide *Consultant* with Material Safety Data Sheets (MSDS).

**1.12 UNFORSEEN HAZARDS**

A. Should any unforeseen or peculiar safety-related factor, hazard, or condition become evident during performance of *Work*, immediately stop work and advise *Consultant* verbally and in writing.

**1.13 HEALTH AND SAFETY CO-ORDINATOR**

A. Employ and assign to *Work*, competent and authorized representative as Health and Safety Coordinator. Health and Safety Coordinator must:
   1. Have minimum 2 years' site-related working experience specific to activities associated with related projects.
   2. Have working knowledge of occupational safety and health regulations.
   3. Be responsible for completing *Contractor*'s Health and Safety Training Sessions and ensuring that personnel not successfully completing required training are not permitted to enter *Place of the Work* to perform *Work*.
   4. Be responsible for implementing, enforcing daily, and monitoring site-specific *Contractor*'s Health and Safety Plan.
   5. Be on site during execution of *Work* and report directly to and be under direction of site supervisor.
   6. Be deemed as 'competent' as defined by the Occupational Health and Safety Act and as noted above.
   7. Provide proof of the above qualifications to the *Consultant*, including the name of the individual responsible for health and safety during the *Work*.

**1.14 POSTED DOCUMENTS**

A. Provide the following documents, or obtain from *Consultant*, and post at *Place of the Work*:
   1. Safety Policy.
   2. Health and Safety Representative.
   3. General Requirements - Constructor's name.
   4. WSIA, Workers Safety Insurance Act.
   5. Ministry of Labour Orders for Province of Ontario.
   6. Occupational Health and Safety Act for Province of Ontario.
   7. Material Safety Data Sheets.
   8. Floor Plan.
   9. Notice of Project.
   10. Joint Health and Safety Committee Members.
   11. Infection Control documents; see section 01 35 33.

B. Comply with Provincial general posting requirements.

**1.15 CONSTRUCTION SAFETY CHECKLISTS**

A. Obtain Construction Safety checklist from *Consultant*.

B. Review and implement applicable health and safety checklists provided by *Consultant* in collaboration with *Consultant*.

### 1.16 CORRECTION OF NON-COMPLIANCE

A. Immediately address health and safety non-compliance issues identified by *Consultant*.

B. Provide *Consultant* with written report of action taken to correct non-compliance of health and safety issues identified.

C. *Consultant* may stop *Work* if non-compliance of health and safety regulations is not corrected.

### 1.17 POWDER ACTUATED DEVICES

A. Do not use powder-actuated devices unless written permission is granted by the *Owner* and the *Consultant*.

### 1.18 WORK STOPPAGE

A. Give precedence to safety and health of public and site personnel and protection of environment over cost and schedule considerations for *Work*.

B. Assign responsibility and obligation to Health and Safety Officer to stop or start *Work* when said Officer deems, it is necessary or advisable for reasons of health or safety. *Consultant* may also stop *Work* for health and safety considerations.

## PART 2 - PRODUCTS NOT USED

## PART 3 - EXECUTION

### 3.1 ACCESS TO SITE

A. The *Owner*'s Health and Safety Coordinator (OHSC) shall have full access to the *Place of the Work*. The *Contractor* shall review site-related issues with the OHSC and make any corrections as required to ensure compliance with the Infection Control Plan.

**END OF HEALTH AND SAFETY REQUIREMENTS**

# SECTION 01 35 33

INFECTION CONTROL GUIDELINES FOR CONSTRUCTION

## PART 1 - GENERAL

### 1.1 REFERENCES

A. Occupational Health and Safety Act and Regulations for Construction Projects, R.S.O. 1990 as amended 426/21.

B. Canada Communicable Disease Report (CCDR) Construction-Related Nosocomial Infections In Patients in Health Care Facilities - Decreasing the Risk of Aspergillus Legionella and Other Infections July 2001 ISSN 1188-4169.

Web Browser at *http://www.phac-aspc.gc.ca/publicat/ccdr-rmtc/01pdf/27s2e.pdf*

C. Health Canada Infection Control Guidelines.

D. CSA Z317.13, Infection Control during Construction, Renovation and Maintenance of Health Care Facilities, latest edition.

E. *Kingston Hospitals*, Infection Control Manual, Prevention of Infections, Construction, Renovation and Maintenance, Section No. IC 2-70.01.

*F. Fundamentals of Infection Control during Construction, Renovations or Maintenance of Health Care Facilities for Site Supervisors and Project Managers Course*

### 1.2 SUBMITTALS

A. Make submittals in accordance with Section 01 33 00.

B. Prepare and submit site-specific Infection Control Plan within 7 days after date of Notice to Proceed and prior to commencement of *Work*. Infection Control Plan must include:

1. List of equipment to be utilized to provide and monitor negative pressure within areas of construction.
2. Location of exhaust penetration to the exterior and routing of ductwork.
3. Identification of systems which require isolation prior to commencement of construction or modification.
4. Location of temporary barriers and partitions including type of material to be used.
5. Location of proposed interior routing of new building products and waste materials.
6. Location of walk-off mats and tack mats.
7. *Certificate of Attendance for the Fundamentals of Infection Control during Construction, Renovations or Maintenance of Health Care Facilities for Site Supervisors and Project Managers*

C. *Owner*'s Infection Control Practitioner (ICP) will review *Contractor*'s site-specific Infection Control Plan and provide comments to *Contractor* within five (5) working days after receipt of plan. Revise plan as appropriate and resubmit plan prior to commencement of *Work*.

D. Review of *Contractor*'s final Infection Control Plan should not be construed as approval and does not reduce the *Contractor*'s overall responsibility for construction infection control measures.

## 1.3 MEETINGS

A. Prior to commencing *Work* and between each phase of the *Project*, schedule and administer an infection control meeting with the *Owner*'s Infection Control Practitioner and the *Consultant*.

B. Infection control shall be carried as a minuted topic in all construction meetings.

## 1.4 PROJECT/SITE CONDITIONS

A. In the areas of the project where the new construction connects to and disrupts existing construction in occupied areas, the *Contractor* shall employ the determined and identified infection control measures appropriate to the Construction Activity and Population Risk Group as determined by the *Owner*'s Infection Control Practitioner.

B. At all times during the completion of this *Project* the *Contractor* will be responsible for ensuring that the guidelines described herein are strictly adhered to.

*C.* For the purposes of this project, the *Contractor* shall carry out Preventative Measures to the requirements of the most current version of *CSA Z317.13* as required by the Construction Activity Type.

## 1.5 GENERAL REQUIREMENTS

A. Prior to commencement of construction, the *Owner* will provide the *Contractor* with a copy of the complete Infection Control Risk Assessment.

B. *Contractor* to develop a written site-specific Infection Control Plan based on the Infection Control Risk Assessment prior to commencing any site *Work* and continue to implement, maintain, and enforce plan until final demobilization from site. The Infection Control Plan must address project specifications. The plan will be based on the Infection Control Risk Assessment as prepared for the project by the *Owner*'s Infection Control Practitioner. A copy of the assessment for this project is included in this section for reference and information.

C. *Consultant* or *Owner*'s representative may respond in writing, where deficiencies or concerns are noted and may request re-submission with correction of deficiencies or concerns.

## 1.6 RESPONSIBILITY

A. Be responsible for adhering to the Infection Control Plan and guidelines established by the *Owner*'s Infection Control Practitioners, for the safety of persons on site and for the protection of persons adjacent to site and environment, to extent that they may be affected by conduct of *Work*.

B. Comply with safety requirements of *Contract Documents*, applicable federal, provincial, territorial and local statutes, regulations, and ordinances, and with site-specific Infection Control Plan and guidelines, and enforce compliance by employees.

## 1.7 CONTRACTOR'S INFECTION CONTROL LIAISON

A. The *Contractor* shall employ a competent and authorized representative as Infection Control Liaison. Infection Control Liaison must:

1. Have minimum 2 years' site-related working experience specific to activities associated with related projects.
2. Have working knowledge of infection control regulations
3. Be responsible to ensure that all personnel carrying out work on site have successfully completed the *Owner*'s Infection Control Training Sessions prior to the commencement of *Work*.
4. Be responsible for implementing, enforcing daily and monitoring site-specific Infection Control Plan.
5. Be on site during execution of *Work* and report directly to and be under direction of site supervisor.
6. Provide proof of the above qualifications to the *Consultant*, including the name of the individual responsible for Infection Control during the work.

## 1.8 POSTING OF DOCUMENTS

A. Ensure applicable items, articles, notices and orders are posted in conspicuous location on site in accordance with Acts and Regulations of Province having jurisdiction, and in consultation with *Consultant* and *Owner*.

## 1.9 CORRECTION OF NON-COMPLIANCE

A. Immediately address infection control non-compliance issues identified by *Owner*'s Infection Control Practitioner or by *Consultant*.

B. Provide *Consultant* with written report of action taken to correct non-compliance of Infection Control issues identified.

C. In the event that non-compliance activity occurs the *Contractor* is responsible for all costs relating to the clean-up and correction of said activity.

## 1.10 WORK STOPPAGE

A. *Owner*'s Infection Control Practitioner may stop *Work* if non-compliance of Infection Control measures is observed.

B. Costs associated with delays as a result of such a work stoppage shall be the responsibility of the *Contractor*.

## 1.11 CERTIFICATION

A. All equipment to be used for the purposes of providing mechanical ventilation or vacuum cleaning shall be certified. Equipment shall be appropriately labeled with date certification completed and recertification shall be performed every 12 months.

B. Once certification is complete, the equipment is to remain on site. Once equipment has left the site the equipment shall be recertified in accordance with this section.

*C. General Contractors shall submit a Certificate of Attendance for the Fundamentals of Infection Control during Construction, Renovations or Maintenance of Health Care Facilities for Site Supervisors and Project Managers prior to mobilization.*

# PART 2 - PRODUCTS

## 2.1 MATERIAL AND EQUIPMENT

A. Provide a certified portable means of mechanical ventilation fan(s) and associated ductwork to provide means of exhaust from the *Place of the Work* directly to the exterior of the building. Fans are to be equipped with HEPA filtration, installed on the construction side of the temporary protection and shall be certified and labeled with date certification was completed. All ductwork in this exhaust system is to be free from any penetrations.

B. Walk-off mats: cut or level-loop pile on rubber backing of nominal minimum size 1000 x 2000 mm.

C. Tack mats: two-way self adhesive sticky plastic sheet as manufactured by Poly Tak or *Consultant* approved equivalent. Tack mats shall be appropriately sized such that both feet make contact with the mat on exit.

D. Differential Pressure Gauge *with digital data recorder* shall be provided on all Type III and Type IV construction barriers in order to ensure pressure differential is maintained at 7.5 Pa (0.03 Inches WC) between the construction site and remainder of the facility.

# PART 3 - EXECUTION

## 3.1 IMPLEMENTATION

A. Prior to the start of work all barriers are to be inspected and approved by the *Owner*'s Infection Control Practitioner. Upon completion of any work that involves the removal of temporary barriers, the area of work shall be inspected and the cleaning approved by the *Owner*'s Infection Control Practitioner prior to removal of any barriers.

B. Implement individual Infection Control measures as outlined in related sections.

C. Place tack mats on both sides of each access route to and from construction areas. Replace mats daily or more often, as required, to ensure mats remain functional for intended purpose.

D. At the entrance/exit to the construction zone adjacent to occupied space, install two way tack mats at entrance/exit doorway to tack dust. Change tack sheet daily or as needed.

E. At entrance/exit to the construction zone, provide walk-off mats (minimum 6m long). Vacuum mats daily and change weekly or as needed.

F. Prior to commencing/completing work above accessible ceiling spaces, vacuum ceiling space in the area of work to prevent distribution of dust and debris. All vacuuming shall be completed with a HEPA filter-equipped device.

G. All mechanical ventilation fans are to be exhausted directly to the exterior of the facility at all times unless alternate method is approved by *Owner*'s Infection Control Practitioner.

## 3.2 ACCESS TO SITE

A. The *Owner*'s Infection Control Practitioner (ICP) shall have full access to the *Place of the Work*. The *Contractor* shall review site related issues with the ICP and make any corrections as required to ensure compliance with the Infection Control Plan.

### 3.3 CLEANING

A. Where cleaning is required, and not performed by the *Contractor* to the facility standards, the *Owner*'s housekeeping department will conduct the cleaning and associated costs will be passed back to the *Contractor*.

**TABLE 1 - PREVENTATIVE MEASURES ANALYSIS**

| Population risk group[1] | Construction Activity Type[2] | | | |
|---|---|---|---|---|
| | Type A | Type B | Type C | Type D |
| Group 1 | I | II | II | III/IV |
| Group 2 | I | II | III | IV |
| Group 3 | I | III | III/IV | IV |
| Group 4 | I-III[3] | III/IV | III/IV | IV |

Notes:

1. See *Table 2* to determine the population risk. Where applicable, refer also to infection control population risk drawings included in the bid documents.
2. See *Table 3* to determine the construction activity type.
3. When the risk group is Group 4 and the construction activity is Type A, the infection prevention and control department shall be consulted to determine the appropriate preventative measure (I, II or III).

## TABLE 2 – POPULATION RISK GROUPS AND GEOGRAPHICAL AREAS

| Population Risk Group | Typical Areas |
|---|---|
| *Group 1*<br>Lowest Risk | Office areas<br>Unoccupied areas<br>Public areas<br>Laundry and soiled linen cleaning areas<br>Physical plant workshops and housekeeping areas |
| *Group 2*<br>Medium Risk | Patient care areas, unless listed in Group 3 and 4<br>Outpatient clinics (except oncology and surgery)<br>Admission and discharge units<br>Waiting rooms<br>Autopsy and morgue<br>Occupational therapy areas remote from patient care areas<br>Physical therapy areas remote from patient care areas |
| *Group 3*<br>Medium to high risk | Emergency (except trauma rooms)<br>Diagnostic imaging<br>Labour and birthing rooms (non-operating)<br>Nurseries for healthy newborns<br>Nuclear medicine<br>Hydrotherapy<br>Echocardiography<br>Laboratories<br>General medical and surgical wards<br>Pediatrics<br>Geriatrics<br>Long-term care<br>Food preparation, serving and dining areas<br>Respiratory therapy<br>Clean linen handling and storage areas |
| *Group 4*<br>Highest risk | Intensive care units<br>Operating rooms (including prep., induction, post anesthesia care unit and scrub areas)<br>Anesthesia storage areas and workrooms<br>Oncology units and outpatient clinics for cancer patients<br>Transplant units and outpatient clinics for transplant patients<br>Wards and outpatient clinics for patients with AIDS or other immunodeficiency diseases<br>Dialysis units<br>Critical care nurseries (NICU)<br>Labour and delivery rooms |

| | |
|---|---|
| | Cardiac catheterization and angiography |
| | Interventional Radiology |
| | Cardiovascular and cardiology patient areas |
| | Endoscopy |
| | Pharmacy admixture rooms |
| | Sterile processing rooms |
| | Sterile supply areas |
| | Burn care units |
| | Animal rooms |
| | Trauma rooms |
| | Protective environment isolation rooms |
| | Tissue culture laboratories |
| | Bronchoscopy |
| | Cystoscopy |
| | Pacemaker insertion rooms |
| | Dental procedure rooms |
| | Central processing department |

**TABLE 3 – CONSTRUCTION ACTIVITY TYPE**

| | |
|---|---|
| *Type A* | Inspection and non-invasive activities: These include, but are not limited to, activities that require removal of ceiling tiles for visual inspection (limited to 1 tile to 50 square feet), painting (but not sanding), wall covering, electrical trim work, minor plumbing (disrupts water supply to a localized patient care area [e.g. 1 room] for less than 15 minutes), and other maintenance activities that do not generate dust or require cutting of wall or access to ceilings other than for visual inspection. |
| *Type B* | Small scale, short duration activities that create minimal dust (e.g., <2 hours). These include, but are not limited to, activities that require access to chase spaces, cutting of walls or ceilings where dust migration can be controlled for the installation/repairs of minor electrical work, ventilation components, telephone wires or computer cables, and sanding walls for painting or wall covering to only repair small patches. It also includes plumbing that requires distribution to the water supply of more than one patient care area (e.g. > 2 rooms) for less than 30 minutes. |
| *Type C* | Any work that generates moderate to high level of dust or requires demolition or removal of any fixed building components or assemblies (e.g. counter tops, cupboards, sinks). These include, but are not limited to, activities that require sanding of walls for painting or wall covering, removal of floor-coverings, ceiling tiles and casework, new wall construction, minor duct work, or electrical work above ceilings, major cabling activities, and any activity that cannot be completed within a single work shift. It also includes plumbing that requires disruption to the water supply or more than one patient care area (e.g. > 2 rooms) for more than 30 minutes but less than 1 hour. |
| *Type D* | Major demolition, construction and renovation projects. These include, but are not limited to, activities that involve heavy demolition or removal of a complete cabling system and new construction requiring consecutive work shifts to complete. It also includes plumbing that results in disruption to the water supply of more than one patient care area (e.g. > 2 rooms) for more than 1 hour. |

**END OF INFECTION CONTROL GUIDELINES FOR CONSTRUCTION**

# CONSTRUCTION/RENOVATION PROJECTS

## INFECTION CONTROL ASSESSMENT

**NAME OF PROJECT: KGH – Jeanne Mance 0 MDR Accreditation update phase 2 & 2x Steam Sterilizer replacement**

**LOCATION OF PROJECT:** Jeanne Mance 0 Medical Device Reprocessing

---

**PROJECTED START DATE:** July 1, 2023 **ACTUAL START DATE : TBD**

---

**ADJACENT TO OTHER AREAS**

**TYPE OF PROJECT:** ☐ new construction X major renovation minor renovation ☐ repair **Project Risk Class:** IV

---

**BRIEF DESCRIPTION OF PROJECT:**

- Remove the existing acoustic tile ceilings and replace;
- Removed existing wood doors, counters and replace with steel;
- Remove existing Steris Steam Sterilizers (existing model Century) washers and replace (Steris model Amsco 400);
- Steam and water mechanical and piping and fittings;
- Electrical connections and wiring;
- Selective demolition of existing interior finishes, drywall;
- Repair of Terrazzo flooring;

**WILL PATIENTS BE DISPLACED:** ☐ YES ☒ NO

---

**PROJECT MANAGER:** Scott Farmer **CONTACT NUMBER:** Phone: (613)549-6666 ext. 3620
Mobile: (613)530-7189

---

**ICP:** Trisha Raney **CONTACT NUMBER:** 613-549-6666 Ext 2617

---

**CONTRACTOR:** TBD **CONTACT NUMBER:**

---

# RISK GROUP DETERMINATION

1. Determine the type of construction activity:

**TYPE A** - Inspection and non-invasive activities (e.g. removal of ceiling tiles, painting (but not sanding), electrical trim work, minor plumbing (local disruption for <15 minutes), and other **maintenance activities that do not generate dust or require cutting of walls or access to ceilings other than for visual inspection**.

**TYPE B** - **Small scale, short duration activities that create minimal dust** (e.g. cutting of walls or ceilings where dust can be controlled for installation/repair of electrical work, ventilation components, telephone wires or computer cables; sanding of small patches of walls for painting or wall covering; plumbing that requires disruption to the water supply of more than one patient care area for <30 minutes.

**TYPE C** - **Any work that generates a moderate to high level of dust or requires demolition or removal of any fixed building components or assemblies** (e.g. countertops, sinks, cupboards). These include largescale sanding of walls, removal of floor-coverings/ceiling tiles, new wall construction, minor duct work or electrical work above ceilings, major cabling activities, and **any activity that cannot be completed within a single work shift**, or plumbing that requires disruption to the water supply of more than one patient care area for >30 minutes but <1 hour**.**

**TYPE D - This involves major demolition, construction and renovation projects**. This includes heavy demolition involving removal of complete cabling systems, new construction requiring consecutive work shifts to complete, plumbing that results in disruption to the water supply of more than one patient care area for >1 hour.

2. Determine the population risk group:

**GROUP 1** - Offices, public areas, unoccupied wards
**GROUP 2** - Outpatient clinics (not including surgery, oncology), admission/discharge units, all patient care areas not included in Group 3 or Group 4
**GROUP 3** - ER, Radiology, PAR, Labour/Delivery, Nurseries, Day surgery, Nuclear medicine, Physiotherapy tank areas, Echocardiography, Laboratories, general med/surg wards other than those in Group 4, Pediatrics, Geriatrics, Longterm care
**GROUP 4** - ICUs, Ors, C-section room, Anesthesia and pump areas, Oncology units, KRCC, Transplant units, clinics for patients who have received transplants, clinics and wards for patients with AIDS or other immunodeficiencies, dialysis units, NICU, cardiac cath & angiography areas, endoscopy areas, cardiovascular/cardiology patients, pharmacy admixture rooms, CPS, Stores

3. Determine the Risk Group & follow the appropriate specifications for the risk group during the construction project :

| RISK GROUP | CONSTRUCTION ACTIVITY | | | |
|---|---|---|---|---|
| | Type A | Type B | Type C | Type D |
| **Group 1** | I | II | II | III/IV |
| **Group 2** | I | II | III | IV |
| **Group 3** | I | III | III/IV | IV |
| **Group 4** | I-III | III/IV | III/IV | IV |

## SPECIFICATIONS FOR INFECTION PREVENTION AND CONTROL MEASURES DURING CONSTRUCTION PROJECTS BY RISK GROUP

| CLASS I PROJECTS | MRP |
|---|---|
| ☐ Minimize patients' exposure to construction/renovation area | Medical/Nursing Staff |
| ☐ immediately replace tiles displaced for visual inspection | Plant/Contractor |
| ☐ Vacuum work area if needed following completion of project | Plant/Contractor |
| ☐ Schedule water interruptions during low activity | Plant/Contractor |
| ☐ Flush water lines prior to reuse | Plant/Contractor |
| ☐ Observe for discolored water | Plant/Contractor |
| ☐ Report discolored water and water leaks to maintenance and ICP | Plant/Contractor/ES/Nursing Staff |
| ☐ Ensure water temperature meets the standards set by the health care facility | Plant/Contractor |
| ☐ Ensure gaskets and items made of materials that support the growth of *Legionella* are not being used | Plant/Contractor |
| ☐ Ensure faucet aerators are not installed or used | Plant/Contractor |
| ☐ Maintain as dry an environment as possible and report any water leaks that occur to walls and substructures | Plant/Contractor |

**CLASS II PROJECTS**

| | | MRP |
|---|---|---|
| ☐ | Minimize patients' exposure to construction/renovation area | Medical/Nursing Staff |
| ☐ | Identify high risk patients who may need to be temporarily moved away from construction zone | Medical/Nursing Staff |
| ☐ | Ensure that patient care equipment and supplies are protected from dust exposure | Medical/Nursing Staff |
| ☐ | immediately replace tiles displaced for visual inspection | Plant/Contractor |
| ☐ | Vacuum work area if needed following completion of project | Plant/Contractor |
| ☐ | Schedule water interruptions during low activity | Plant/Contractor |
| ☐ | Flush water lines prior to use | Plant/Contractor |
| ☐ | Observe for discolored water | Plant/Contractor |
| ☐ | Report discolored water and water leaks to maintenance and ICP | Plant/Contract/ES/Nursing |
| ☐ | Ensure water temperature meets the standards set by the health care facility | Plant/Contractor |
| ☐ | Ensure gaskets and items made of materials that support the growth of *Legionella* are not used | Plant/Contractor |
| ☐ | Ensure faucet aerators are not installed or used | Plant/Contractor |
| ☐ | Maintain as dry an environment as possible and report water leaks to walls & substructures | Plant/Contractor |
| ☐ | Avoid collection tanks and long pipes that allow water to stagnate | Plant/Contractor |
| ☐ | Consider hyperchlorinating or superheating stagnant potable water | Plant/Contractor |
| ☐ | Wet mop and/or vacuum as necessary | Plant/Contractor |
| ☐ | Provide active means to minimize dust generation and migration into the atmosphere; This may include drop sheets, water misting work surfaces while cutting, sealing windows and Unused doors with duct tape; sealing air vents in the construction/renovation area, or placing dust mats at the entrance to work areas | Plant/Contractor |
| ☐ | Wet mop and vacuum area with a HEPA filtered vacuum as needed and when work is complete | ES |
| ☐ | Wipe horizontal work surfaces with a disinfectant when work is complete | ES |
| ☐ | Disable the ventilation system in the construction/renovation area until project is complete | Plant/Contractor |
| ☐ | Monitor need to change and/or clean filters in construction or renovation area | Plant/Contractor |
| ☐ | Contain debris in covered containers or cover with a moistened sheet before transporting for disposal | Plant/Contractor |

| CLASS III PROJECTS | MRP |
|---|---|
| ☐ Move high risk patients who are in or adjacent to the construction area | Medical/Nursing Staff |
| ☐ Ensure that patients do not go near the construction area | Medical/Nursing Staff |
| ☐ Ensure that patient care equipment and supplies are protected from dust exposure | Medical/Nursing Staff |
| ☐ In collaboration with the facility project manager, designate a traffic pattern for construction workers that avoids patient care areas and a traffice pattern for clean or sterile supplies and Equipment that avoids the construction area | ICP/Project Manager |
| ☐ Remove debris at the end of each work day | Plant/Contractor |
| ☐ Erect an external chute if the construction is not taking place at ground level | Plant/Contractor |
| ☐ Erect an impermeable dust barrier from true ceiling (includes area above false ceilings) to the Floor consisting of 2 layers of 6 mil polyethylene or Sheetrock | Plant/Contractor |
| ☐ Ensure that windows, doors, plumbing penetrations, electrical outlets, intake and exhaust vents Are properly sealed with plastic and duct taped within the construction/renovation area | Plant/Contractor |
| ☐ Vacuum air ducts and spaces above ceilings if necessary | Plant/Contractor |
| ☐ Ensure that construction workers wear protective clothing that is removed each time they leave The construction site before going into patient care areas. | Plant/Contractor |
| ☐ Do not remove dust barrier until the project is complete and the area has been cleaned thoroughly and inspected | Plant/Contractor |
| ☐ Remove dust barrier carefully to minimize spreading dust and other debris particles associated with the construction project | Plant/Contractor |
| ☐ Wet mop and vacuum area with a HEPA filtered vacuum daily or more frequently if needed | Plant/Contractor |
| ☐ Inspect dust barriers frequently | ICP |
| ☐ Maintain negative pressure within construction zone by using portable HEPA equipped air filtration units | Plant/Contractor |
| ☐ Ensure air is exhausted directly outside and away from intake vents or filtered through a HEPA filter before being re-circulated. | Plant/Contractor |
| ☐ Ensure ventilation system is functioning properly and is cleaned if contaminated by soil or dust after construction or renovation project is complete | Plant/Contractor |
| ☐ Schedule water interruptions during low activity | Plant/Contractor |
| ☐ Flush water lines prior to reuse | Plant/Contractor |

| **CLASS III PROJECTS (Continued)** | **MRP** |
|---|---|
| ☐ Observe for discolored water | Plant/Contractor |
| ☐ Report discolored water and water leaks to maintenance and ICP | Plant/Contract/ES/Nursing |
| ☐ Ensure water temperature meets the standards set by the health care facility | Plant/Contractor |
| ☐ Ensure gaskets and items made of materials that support the growth of *Legionella* are not used | Plant/Contractor |
| ☐ Ensure faucet aerators are not installed or used | Plant/Contractor |
| ☐ Maintain as dry an environment as possible and report any water leaks to walls and substructures | Plant/Contractor |
| ☐ Avoid collection tanks and long pipes that allow water to stagnate | Plant/Contractor |
| ☐ Consider hyperchlorinating or superheating stagnant potable water | Plant/Contractor/ICP |
| ☐ Increase frequency of cleaning in areas adjacent to the construction zone while project is underway | ES |
| ☐ Wipe horizontal work surfaces with a disinfectant when work is complete | ES |
| ☐ In collaboration with ICP ensure that construction zone is thoroughly cleaned when work is complete | ES/ICP/Nursing |
| ☐ Disable the ventilation system in the construction/renovation area until project is complete | Plant/Contractor |
| ☐ Monitor need to change and/or clean filters in construction or renovation area | Plant/Contractor |
| ☐ Contain debris in covered containers or cover with moistened sheet before transporting for disposal | Plant/Contractor |

**ICP = Infection Control Practitioner**
**ES = Environmental Services**

| **CLASS IV PROJECTS** | **MRP** |
|---|---|
| ☐ Move high risk patients who are in or adjacent to the construction area | Medical/Nursing Staff |
| ☐ Ensure that patients do not go near the construction area | Medical/Nursing Staff |
| ☐ Ensure that patient care equipment and supplies are protected from dust exposure | Medical/Nursing Staff |
| ☐ Staff are not permitted to visit the construction site | Medical/Nursing Staff |
| ☐ In collaboration with the facility project manager; designate a traffic pattern for construction workers that avoids patient care areas; and traffic pattern for clean or sterile supplies and equipment that avoids the construction area | ICP/Project Manager |
| ☐ Remove debris at the end of each workday. | Plant/Contractor |
| ☐ Erect an external chute if the construction is not taking place at ground level | Plant/Contractor |
| ☐ Erect an impermeable dust barrier from true ceiling (includes area above false ceilings) to the floor consisting of 2 layers of 6 mil polyethylene or Sheetrock, with the addition of an anteroom | Plant/Contractor |
| ☐ Place a walk-off mat outside the anteroom in patient care areas and inside the anteroom to trap dust from workers' shoes, equipment and debris that leaves the construction zone | Plant/Contractor |
| ☐ Ensure the construction workers leave the construction zone through the anteroom and are Vacuumed with a HEPA filtered vacuum before leaving the work site; or that they wear cloth or Paper coveralls that are removed each time they leave the work site | Plant/Contractor |
| ☐ All personnel entering the construction zone are to wear shoe covers | Plant/Contractor |
| ☐ Shoe covers are to be changed each time a worker leaves the work site | Plant/Contractor |
| ☐ Holes in walls are to be repaired within 8 hours or sealed temporarily | Plant/Contractor |
| ☐ Ensure that windows, doors, plumbing penetrations, electrical outlets, intake and exhaust vents Are properly sealed with plastic and duct taped within the construction/renovation area | Plant/Contractor |
| ☐ Vacuum air ducts and spaces above ceilings if necessary | Plant/Contractor |
| ☐ Do not remove dust barrier until the project is complete and the area has been cleaned thoroughly and inspected | Plant/Contractor |
| ☐ Remove dust barrier carefully to minimize spreading dust and other debris particles associate with the construction project | Plant/Contractor |
| ☐ Wet mop and vacuum area with a HEPA filtered vacuum daily or more frequently if needed | Plant/Contractor |
| ☐ Inspect dust barriers frequently | ICP |
| ☐ Regular infection control visit to the construction site to ensure that preventive measures are being followed. Wear coveralls and shoe covers when visiting the site | ICP |

| CLASS IV PROJECTS | MRP |
|---|---|
| ☐ Maintain negative pressure within construction zone and anteroom by using portable HEPA equipped air filtration units | Plant/Contractor |
| ☐ Ensure air is exhausted directly outside and away from intake vents or filtered through a HEPA filter before being re-circulated | Plant/Contractor |
| ☐ Ensure ventilation system is functioning properly in adjacent areas and is cleaned if contaminated by soil or dust after construction or renovation project is complete | Plant/Contractor |
| ☐ Schedule water interruptions during low activity | Plant/Contractor |
| ☐ Flush water lines prior to use | Plant/Contractor |
| ☐ Observe for discolored water | Plant/Contractor |
| ☐ Report discolored water and water leaks to maintenance and ICP | Plant/Contractor/ES/Nursing |
| ☐ Ensure water temperature meets the standards set by the health care facility | Plant/Contractor |
| ☐ Ensure gaskets and items made of materials that support the growth of *Legionella* are not used | Plant/Contractor |
| ☐ Ensure faucet aerators are not installed or used | Plant/Contractor |
| ☐ Maintain as dry an environment as possible and report any water leaks that occur to walls and substructures | Plant/Contractor |
| ☐ Avoid collection tanks and long pipes that allow water to stagnate | Plant/Contractor |
| ☐ Consider hyperchlorinating or superheating stagnant potable water | Plant/Contractor/ICP |
| ☐ Consider using another source of potable water for patients who are at greatest risk until potable water has been cleared for signs of *Legionella* after major plumbing installation/repairs | Medical/Nursing Staff |
| ☐ Increase frequency of cleaning in areas adjacent to the construction zone while project is underway | ES |
| ☐ Wipe horizontal work surfaces with a disinfectant when work is complete | ES |
| ☐ In collaboration with ICP ensure construction zone is thoroughly cleaned when work is complete | Plant/Contractor |
| ☐ Disable the ventilation system in the construction/renovation area until project is complete | Plant/Contractor |
| ☐ Monitor need to change and/or clean filters in construction or renovation area | ES/ICP/Nursing Staff |
| ☐ Contain debris in covered containers or cover with a moistened sheet before transporting for disposal | Plant/Contractor |

**ICP = Infection Control Practitioner**
**ES = Environmental Services**

# SECTION 01 40 00
QUALITY REQUIREMENTS

## PART 1 - GENERAL

### 1.1 REFERENCE STANDARDS

A. "Reference standards" means consensus standards, trade association standards, guides, and other publications expressly referenced in *Contract Documents*.

B. Where an edition or version date is not specified, referenced standards shall be deemed to be the latest edition or revision issued by the publisher at the time of bid closing. However if a particular edition or revision date of a specified standard is referenced in an applicable code or other regulatory requirement, the regulatory referenced edition or version shall apply.

C. Reference standards establish minimum requirements. If *Contract Documents* call for requirements that differ from a referenced standard, the more stringent requirements shall govern.

D. If compliance with two or more reference standards is specified and the standards establish different or conflicting requirements, comply with the most stringent requirement. Refer uncertainties to *Consultant* for clarification.

E. Within the *Specifications*, reference may be made to the following standards writing, testing, or certification organizations by their acronyms or initialisms:
1. AA - Aluminum Association
2. ACI - American Concrete Institute
3. AISC - American Institute of Steel Construction
4. ANSI - American National Standards Institute
5. ASME - American Society of Mechanical Engineers
6. ASTM - American Society for Testing and Materials
7. AWMAC - Architectural Woodwork Manufacturers Association of Canada
8. AWPA - American Wire Producers Association
9. CaGBC - Canadian Green Building Council
10. CGSB - Canadian General Standards Board
11. CISC - Canadian Institute of Steel Construction
12. CPCI - Canadian Prestressed Concrete Institute
13. CSA - Canadian Standards Association
14. CSSBI - Canadian Sheet Steel Building Institute
15. CWB – Canadian Welding Bureau
16. ICEA - Insulated Cable Engineers Association
17. IEEE - Institute of Electrical and Electronics Engineers
18. IGMAC – Insulating Glass Manufacturers Association of Canada
19. LEED - Leadership in Energy and Environmental Design
20. MPP – Master Painters Institute
21. MSS - Manufacturers Standardization Society of the Valve and Fittings Industry
22. NAAMM - National Association of Architectural Metal Manufacturers
23. NEMA - National Electrical Manufacturers Association
24. NFPA - National Fire Protection Association
25. NHLA - National Hardwood Lumber Association
26. NLGA - National Lumber Grades Authority
27. SSPC – The Society for Protective Coatings
28. TTMAC - Terrazzo, Tile and Marble Association of Canada
29. ULC - Underwriters' Laboratories of Canada

## 1.2 INDEPENDENT INSPECTION AND TESTING AGENCIES

A. Except as otherwise specified, *Owner* will retain and pay for independent inspection and testing agencies to inspect, test, or perform other quality control reviews of parts of the *Work*.

B. Retain and pay for inspection and testing that is for *Contractor*'s own quality control or is required by regulatory requirements.

C. Employment of inspection and testing agencies by *Contractor* or *Owner* does not relieve *Contractor* from responsibility to perform the *Work* in accordance with *Contract Documents*.

D. Allow and arrange for inspection and testing agencies to have access to the *Work*, including access to off site manufacturing and fabrication plants.

E. For inspection and testing required by *Contract Documents* or by authorities having jurisdiction, provide *Consultant* and inspection and testing agencies with timely notification in advance of required inspection and testing.

F. Submit test samples required for testing in accordance with submittals schedule specified in Section 01 32 00 – Construction Progress Documentation.

G. Provide labour, *Construction Equipment* and temporary facilities to obtain and handle test samples on site.

H. If defects are revealed during inspection and/or testing, appointed agency will request additional inspection and/or testing to ascertain full degree of defect. Correct defect and irregularities as advised by *Consultant* at no cost to *Owner*. Pay costs for retesting and/or re-inspection.

## 1.3 INSPECTION AND TESTING AGENCY REPORTS

A. For inspection and testing required by *Contract Documents* or by regulatory requirements, and performed by *Contractor* retained inspection and testing agencies, submit to *Consultant* and *Owner* copies of reports. Submit within one day after completion of inspection and testing.

B. For inspection and testing performed by *Owner* retained inspection and testing agencies, copies of inspection and testing agency reports will be provided to *Contractor*.

C. Provide copies to *Subcontractor* of work being inspected or tested, or to the manufacturer or fabricator of material being inspected or tested.

## 1.4 TESTS AND MIX DESIGNS

A. Furnish test results and mix designs as requested.

B. The cost of tests and mix designs beyond those called for in *Contract Documents* or beyond those required by law of *Place of the Work* shall be appraised by *Consultant* and may be authorized as recoverable.

## 1.5 MOCK-UPS

A. Prepare mock-ups of *Work* as specified in the technical *Specifications*. If a mock-up location is not indicated in the *Drawings* or *Specifications*, locate where directed by *Consultant*.

B. Modify mock-up as required until *Consultant* approval is obtained.

C. Approved mock-ups establish an acceptable standard for the *Work*.

D. Protect mock-ups from damage until the *Work* they represent is complete.

E. Unless otherwise specified in the technical *Specifications*, approved mock-ups forming part of the *Work* may remain as part of the *Work*.

F. Remove mock-ups only when the *Work* they represent is complete or when otherwise directed by *Consultant*.

### 1.6 MILL TESTS

A. Submit mill test certificates as requested or required by specification Sections.

### 1.7 EQUIPMENT AND SYSTEMS

A. Submit adjustment, balancing and verification reports for mechanical, electrical and building equipment systems.

B. Refer to Division 20 and 26 for definitive requirements for mechanical and electrical systems, commissioning, adjustments, balancing and testing.

## PART 2 - PRODUCTS NOT USED

## PART 3 - EXECUTION NOT USED

## END OF QUALITY REQUIREMENTS

This page intentionally left blank.

# SECTION 01 51 00
TEMPORARY UTILITIES

## PART 1 - GENERAL

### 1.1 TEMPORARY UTILITIES - GENERAL

A. Provide temporary utilities as specified and as otherwise necessary to perform the *Work* expeditiously.

B. Remove temporary utilities after use.

### 1.2 TEMPORARY WATER SUPPLY

A. *Owner* will provide supply of water for construction use. The *Contractor* is responsible for providing connection to existing service, as required.

B. The *Contractor* shall be responsible for providing potable water for consumption by the workforce.

### 1.3 TEMPORARY HEATING AND VENTILATION

A. Arrange and pay for temporary heating and ventilation required during construction.

B. Vent construction heaters in enclosed spaces to the outside or use flameless type of construction heaters.

C. Provide temporary heat for the *Work* as required to:
1. Facilitate progress of *Work*.
2. Protect the *Work* against dampness and cold.
3. Prevent moisture condensation on surfaces, freezing, or other damage to finishes or stored *Products*.
4. Maintain specified minimum ambient temperatures and humidity levels for storage, installation and curing of *Products*.
5. Provide adequate ventilation to meet health regulations for safe working environment.
6. After building is enclosed, maintain interior temperature of minimum 10 degrees C.
7. In occupied space adjacent to construction areas, maintain an average ambient temperature of 18 degrees C.

D. Provide temporary ventilation for the *Work* as required to:
1. Prevent accumulations of fumes, exhaust, vapours, gases and other hazardous, noxious, or volatile substances in enclosed spaces, as required to maintain a safe work environment meeting applicable regulatory requirements.
2. Ensure that hazardous, noxious, or volatile substances do not migrate to Owner occupied spaces.
3. Dispose of exhaust materials in manner that will not result in harmful exposure to people.
4. Ventilate storage spaces containing hazardous or volatile materials.
5. Ventilate temporary sanitary facilities.
6. Continue operation of ventilation and exhaust system after completion of work process to assure removal of harmful contaminants.
7. Maintain negative pressure to the adjacent areas. Refer to Section 01 35 65 for additional requirements for negative pressure enclosures.

E. Permanent heating system of building may be used when available. Be responsible for damage to heating system if use is permitted.

F. On completion of *Work* for which permanent heating system is used, replace filters and clean radiation devices prior to occupancy.

G. Ensure date of *Substantial Performance of the Work* and warranties for heating system do not commence until entire system is in as near original condition as possible and is certified by *Consultant*.

H. Maintain strict supervision of operation of temporary heating and ventilating equipment to:
   1. Conform to applicable codes and standards.
   2. Enforce safe practices.
   3. Prevent abuse of services.
   4. Prevent damage to finishes.
   5. Vent direct-fired combustion units to outside.

I. Be responsible for damage to the *Work* due to failure in providing adequate heat and protection during construction.

### 1.4 TEMPORARY ELECTRICAL POWER AND LIGHTING

A. Arrange and pay for temporary power and lighting required during construction. Connect to utility power supply in accordance with Canadian Electrical Code and provide meters and switching.

B. Arrange and pay for necessary connections and disconnections of temporary power and lighting in accordance with regulatory requirements.

C. Provide and maintain temporary lighting throughout project. Ensure level of illumination on all floors and stairs is not less than 162 lx.

D. With prior approval of *Consultant*, and provided that guarantees are not affected, electrical power and lighting systems installed under this *Contract* may be used for Construction requirements. Make good damage to electrical system caused by use under this *Contract*. Replace lamps which have been used for more than 3 months.

### 1.5 TEMPORARY COMMUNICATION FACILITIES

A. Provide and pay for temporary telephone fax and internet hook up, lines and equipment necessary for own use.

### 1.6 FIRE PROTECTION

A. During performance of *Work*, provide and maintain temporary fire protection equipment required by insurance companies having jurisdiction and governing codes, regulations and bylaws.

B. If *Work* requires de-activation of the fire alarm system, or any part thereof, a "Utility Shutdown Form" must be completed and submitted. A copy of the "Utility Shutdown Form" is included in Section 01 14 00.

C. Provide and maintain a temporary fire alarm system through to project completion.

## PART 2 - PRODUCTS NOT USED

## PART 3 - EXECUTION NOT USED

## END OF TEMPORARY UTILITIES

# SECTION 01 52 00
CONSTRUCTION FACILITIES

## PART 1 - GENERAL

### 1.1 CONTRUCTION FACILITIES - GENERAL

A. Provide temporary construction facilities as necessary for performance of the *Work* and in compliance with applicable regulatory requirements.

B. Maintain temporary construction facilities in good condition for the duration of the *Work*.

C. Remove temporary construction facilities from *Place of the Wor*k when no longer required.

### 1.2 CONSTRUCTION PARKING

A. Parking will not be permitted at *Place of the Work*. The *Contractor* is responsible to obtain and pay for parking as required.

### 1.3 VEHICULAR ACCESS

A. Provide and maintain adequate access to *Place of the Work*.

B. Existing roads at *Place of the Work* may be used for access to *Place of the Work*, provided *Contractor* assumes responsibility for any damage caused by construction traffic, and prevents or promptly cleans up any mud tracking or material spillage.

### 1.4 SITE OFFICES

A. The *Owner* will arrange for a space within the facility suitable for the use by the *Contractor* as a site office for the duration of the project. The *Contractor* is required to maintain the space in as found condition and is required to repair all damage caused to the space.

### 1.5 SANITARY FACILITIES

A. The *Owner* will designate a sanitary facility for the use of the *Contractor* in accordance with governing regulations and ordinances.

B. Post notices and take such precautions as required by local health authorities.

C. Ensure facility is maintained in sanitary condition at all times and cleaned in accordance with Section 01 74 00.

### 1.6 FIRE PROTECTION

A. Provide and maintain temporary fire protection systems and equipment during construction.

### 1.7 USE OF EXISTING ELEVATORS

A. Designated elevators may be used by construction personnel and for transporting *Products*. Co-ordinate use with *Owner*.

B. Provide protective coverings for finish surfaces of cars and entrances. Assume responsibility for and make good any damage to existing elevators caused by construction personnel.

C. The *Contractor* is responsible to ensure that posted loading is not exceeded for any reason.

D. *Contractor* is responsible to perform maintenance service on designated elevator at end or *Project*. *Owner* to provide maintenance provider contact.

### 1.8 LOADING

A. Do not load or permit to load any part of the *Work* with a weight or force that will endanger the *Work*.

B. Do not block vehicular traffic or pedestrian access to the Hospital site while loading and unloading. Schedule delivery of *Products* shipped to loading dock with *Owner*'s representative a minimum of 48 hours prior to delivery. *Owner*'s operation will take precedence over that of the *Contractor*. Deliveries are to be scheduled to take place at the loading dock between the hours of *16:00 and 08:00*.

**1.9 EQUIPMENT, TOOLS AND MATERIALS STORAGE**

A. Do not unreasonably encumber premises with *Products*. Confine storage of *Products* to designated areas.

B. Provide and maintain, in a clean and orderly condition, lockable storage boxes suitable for tools, *Construction Equipment* and *Products*.

C. Locate *Products*, not used that day on site, in a manner to cause least interference with work activities.

D. The *Owner* is not responsible for any losses incurred by the *Contractor*.

**1.10 HOISTING**

A. Provide, operate and maintain hoists and temporary cranes required for moving of workers, materials and equipment. Make financial arrangements with *Subcontractors* for use thereof.

B. Hoist cranes shall be operated by qualified operators.

C. Hoisting equipment, labour and material shall be the responsibility of the *Contractor*.

**1.11 PROJECT IDENTIFICATION SIGNS**

A. No signs or advertisements, other than construction signs and warning signs, are permitted on site.

B. Signs and notices for safety and instruction shall be in both official languages. Graphic symbols shall conform to *CAN3-Z321*.

C. Maintain approved signs and notices in good condition for duration of project, and dispose of off-site on completion of project.

## PART 2 - PRODUCTS NOT USED

## PART 3 - EXECUTION NOT USED

## END OF CONSTRUCTION FACILITIES

# SECTION 01 56 00
TEMPORARY BARRIERS AND ENCLOSURES

## PART 1 - GENERAL

### 1.1 BARRIERS AND ENCLOSURES - GENERAL

A. Provide temporary barriers and enclosures necessary to protect the public and building occupants and to secure *Place of the Wor*k during performance of the *Work*.

B. Comply with applicable regulatory requirements.

C. Maintain temporary barriers and enclosures in good condition for the duration of the *Work*.

D. Remove temporary barriers and enclosures from *Place of the Work* when no longer required.

### 1.2 GUARD RAILS AND BARRICADES

A. Provide as required by governing authorities.

### 1.3 TEMPORARY PARTITIONS

A. Where construction activities will occur within an occupied floor area for a period of time exceeding 24 hours and where indicated, provide insulated temporary partitions to localize dust generating activities, and for protection of workers, finished areas of Work and public and in areas where the construction must be isolated from the remainder of the floor area.

B. Temporary partitions are to be constructed to underside of structure above using metal studs and gypsum board construction to create a 1 hour fire separation in accordance with ULC design W408. Prime and paint partition exposed to occupied side of floor area.

C. Provide fire-rated hollow metal doors and frames and hardware where indicated and where required to maintain path of egress. Prime and paint door and frames faces exposed to occupied side of floor area.

D. Maintain and relocate protection until such work is complete.

E. Maintain work areas within existing occupied areas under negative pressure at all times.

F. Where existing wall, ceiling and floor materials or finishes are damaged as a result of barrier construction, repair materials or finishes to match existing.

### 1.4 ACCESS TO SITE

A. Provide and maintain access roads, sidewalk crossings, ramps and construction runways as may be required for access to Work.

### 1.5 PUBLIC TRAFFIC FLOW

A. Do not impede public transportation and vehicle flow with construction vehicles.

### 1.6 FIRE ROUTES

A. Maintain fire access routes, including overhead clearances, for use by emergency response vehicles, and access to hydrants and siamese connections.

B. Review site restrictions, lay down areas and site access with the Authorities having Jurisdiction prior to construction start.

### 1.7 PROTECTION OF BUILDING FINISHES

A. Provide necessary temporary barriers and enclosures to protect existing and completed or partially completed finished surfaces from damage during performance of the *Work*.

B. Locations and installation schedule to be confirmed with Consultant three (3) days prior to installation.

C. Be responsible for damage incurred due to lack of, or improper, protection.

## PART 2 - PRODUCTS NOT USED

## PART 3 - EXECUTION NOT USED

## END OF TEMPORARY BARRIERS AND ENCLOSURES

# SECTION 01 57 00
TEMPORARY CONTROLS

## PART 1 - GENERAL

### 1.1 TEMPORARY CONTROLS - GENERAL

A. Provide temporary controls as necessary for performance of the *Work* and in compliance with applicable regulatory requirements.

B. Maintain temporary controls in good condition for the duration of the *Work*.

C. Remove temporary controls and *Construction Equipment* used to provide temporary controls from *Place of the Work* when no longer required.

### 1.2 DUST AND PARTICULATE CONTROL

A. Implement and maintain dust and particulate control measures in accordance with applicable regulatory requirements.

B. Execute *Work* by methods that minimize dust from construction operations and spreading of dust on site or to adjacent properties.

C. Provide temporary enclosures to prevent extraneous materials resulting from sandblasting or similar operations from contaminating air beyond immediate work area.

D. Cover or wet down dry materials and rubbish to prevent blowing dust and debris. Provide dust control for temporary roads.

E. Use appropriate covers on trucks hauling fine, dusty, or loose materials.

### 1.3 POLLUTION CONTROL

A. Take measures to prevent contamination of soil, water, and atmosphere through uncontrolled discharge of noxious or toxic substances and other pollutants, potentially causing environmental damage.

B. Be prepared, by maintaining appropriate materials, equipment, and trained personnel on site, to intercept, clean up, and dispose of spills or releases that may occur. Promptly report spills and releases that may occur to:

C. authority having jurisdiction,

D. person causing or having control of pollution source, if known, and

E. *Owner* and *Consultant*.

F. Contact manufacturer of pollutant, if known and applicable, to obtain material safety data sheets (MSDS) and ascertain hazards involved and precautions and measures required in cleanup or mitigating actions.

G. Take immediate action to contain and mitigate harmful effects of the spill or release.

## PART 2 - PRODUCTS NOT USED

## PART 3 - EXECUTION NOT USED

## END OF TEMPORARY CONTROLS

This page intentionally left blank.

# SECTION 01 61 00
COMMON PRODUCT REQUIREMENTS

## PART 1 - GENERAL

### 1.1 GENERAL

A. Provide *Products* that are not damaged or defective, and suitable for purpose intended, subject to specified requirements. If requested by *Consultant*, furnish evidence as to type, source and quality of *Products* provided.

B. Unless otherwise specified, maintain uniformity of manufacture for like items throughout.

C. Permanent manufacturer's markings, labels, trademarks, and nameplates on *Products* are not acceptable in prominent locations, except where required by regulatory requirements or for operating instructions, or when located in mechanical or electrical rooms.

### 1.2 PRODUCT OPTIONS

A. Subject to the provisions of Section 01 25 00 –Substitution Procedures:
   1. Wherever a *Product* or manufacturer is specified by a single proprietary name, provide the named *Product* only.
   2. Wherever more than one *Product* or manufacturer is specified by proprietary name for a single application, provide any one of the named *Products*.

B. Wherever a *Product* is specified by reference to a standard only (Indicated as "Standard of Acceptance" in Technical Specifications), provide any *Product* that meets or exceeds the specified standard. If requested by *Consultant*, submit information verifying that the proposed *Product* meets or exceeds the specified standard.

C. Wherever a *Product* is specified by descriptive or performance requirements only (Indicated as "Basis of Design" in Technical Specifications, provide any *Product* that meets or exceeds the specified requirements. If requested by *Consultant*, submit information verifying that the proposed *Product* meets or exceeds the specified requirements.

### 1.3 PRODUCT AVAILABILITY AND DELIVERY TIMES

A. Promptly upon Contract award and periodically during construction, review and confirm *Product* availability and delivery times. Order *Products* in sufficient time to meet the construction progress schedule and the *Contract Time*.

B. If a specified *Product* is no longer available, promptly notify *Consultant*. *Consultant* will take action as required.

C. If delivery delays are foreseeable, for any reason, promptly notify *Consultant*.
   1. If a delivery delay is beyond *Contractor*'s control, *Consultant* will provide direction.
   2. If a delivery delay is caused by something that was or is within *Contractor*'s control, *Contractor* shall propose actions to maintain the construction progress schedule for *Consultant*'s review and acceptance.

### 1.4 STORAGE, HANDLING, AND PROTECTION

A. Store, handle, and protect *Products* during transportation to *Place of the Work* and before, during, and after installation in a manner to prevent damage, adulteration, deterioration and soiling.

B. Comply with manufacturer's instructions for storage, handling and protection.

C. Store packaged or bundled *Products* in original and undamaged condition with manufacturer's seals and labels intact. Do not remove from packaging or bundling until required in *Work*.

D. Comply with the requirements of the workplace hazardous materials information system (WHMIS) regarding use, handling, storage, and disposal of hazardous materials, including requirements for labeling and the provision of material safety data sheets (MSDS).

E. Store *Products* subject to damage from weather in weatherproof enclosures.

F. Store sheet *Products* on flat, solid, supports and keep clear of ground. Slope to shed moisture.

G. Remove and replace damaged *Products*.

## PART 2 - PRODUCTS NOT USED

## PART 3 - EXECUTION NOT USED

**END OF COMMON PRODUCT REQUIREMENTS**

# SECTION 01 71 00
EXAMINATION AND PREPARATION

## PART 1 - GENERAL

### 1.1 SETTING OUT OF WORK

A. Assume full responsibility for and execute complete layout of the *Work* to locations, lines and elevations indicated.

B. Provide *Construction Equipment* needed to lay out and construct the *Work*.

C. Supply *Construction Equipment* to facilitate *Consultant's* inspection of the *Work*.

### 1.2 EXAMINATION, COOPERATION AND COORDINATION

A. *Subcontractors* are responsible to familiarize themselves with the *Contract Documents* and the work of all trades therein.

B. *Subcontractors* shall give timely instructions and information to the *Contractor* concerning their requirements as they relate to other parts of the *Work*.

C. Each trade shall report to the *Contractor* defects in surfaces or work prepared by other trades which affect their own, and ensure that conditions are appropriate for the carrying out of their portion of the *Work*. Commencement of the *Work* shall imply acceptance of conditions.

D. Cooperate with the *Consultant* and *Other Contractors* employed by the *Owner*.

### 1.3 LINES AND LEVELS

A. Prior to commencement of the *Work*, verify all grades, levels, lines and dimensions shown on the *Drawings* and report any errors and inconsistencies to the *Consultant*.

B. Maintain a complete, accurate log of control and survey work as it progresses.

C. Upon completion, complete an accurate record drawing of the completed *Project*. Submit in accordance with Section 01 78 00.

### 1.4 EXISTING UTILITIES AND STRUCTURES

A. Before commencing the *Work*, establish location and extent of service lines in area of work and notify *Consultant* of findings.

B. Promptly notify *Consultant* if underground utilities, structures, or their locations differ from those indicated in *Contract Documents* or in available project information. *Consultant* will provide appropriate direction.

C. Record locations of maintained, re-routed and abandoned utility lines.

### 1.5 VERIFICATION OF EXISTING CONDITIONS

A. The *Contractor* shall carefully examine the *Place of Work* and all conditions affecting the *Work* during the bidding period.

B. Claims for extra payments due to difficulties encountered, which could have been foreseen during examination, will not be considered.

C. Where work specified in any Section is dependent on the work of another Section or Sections having been properly completed, verify that work is complete and in a condition suitable to receive the subsequent work. Commencement of work of a Section that is dependent on the work of another Section or Sections having been properly completed, means acceptance of the existing conditions.

D. Verify that ambient conditions are suitable before commencing the work of any Section and will remain suitable for as long as required for proper setting, curing, or drying of *Products* used.

E. Ensure that substrate surfaces are clean, dimensionally stable, cured and free of contaminants.

F. Notify *Consultant* in writing of unacceptable conditions.

**1.6 DETAILS AND MEASUREMENTS**

A. Check and verify all dimensions wherever referring to the *Work*. Verify all dimensions when pertaining to the work of other trades with the *Subcontractor* concerned. Check dimensions and the actual material to be used on the *Work* with the various drawings and details before the *Work* commences, and report any variations to the *Consultant* for adjustment, if necessary.

## PART 2 - PRODUCTS NOT USED

## PART 3 - EXECUTION NOT USED

## END OF EXAMINATION AND PREPARATION

# SECTION 01 73 00
EXECUTION

## PART 1 - GENERAL

### 1.1 SUMMARY

A. Except where otherwise specified in technical *Specifications* or otherwise indicated on *Drawings*, comply with requirements of this Section.

### 1.2 CODES AND REGULATIONS COMPLIANCE

A. Perform Work in accordance with Ontario Building Code of Canada (OBC), Ontario Fire Code (OFC), Occupational Health and Safety Act and other codes of provincial or local application, provided that in case of conflict or discrepancy, more stringent requirements apply, including all amendments made up to the bid closing date.

B. Perform the *Work* in accordance with WHMIS regulations, the Occupational Health and Safety Act and Section 01 35 33.

### 1.3 MANUFACTURER'S INSTRUCTIONS

A. Install, erect, or apply *Products* in strict accordance with manufacturer's instructions.

B. Notify *Consultant*, in writing, of conflicts between *Contract Documents* and manufacturer's instructions where, in *Contractor*'s opinion, conformance with *Contract Documents* instead of the manufacturer's instructions may be detrimental to the *Work* or may jeopardize the manufacturer's warranty.

C. Do not rely on labels or enclosures provided with *Products*. Obtain written instructions directly from manufacturers.

D. Provide manufacturer's representatives with access to the *Work* at all times. Render assistance and facilities for such access so that manufacturer's representatives may properly perform their responsibilities.

### 1.4 CONCEALMENT

A. Conceal pipes, ducts, and wiring in floors, walls and ceilings in finished areas:
   1. After review by *Consultant* and authority having jurisdiction, and
   2. Where locations differ from those shown on *Drawings*, after recording actual locations on as-built drawings.

B. Provide incidental furring or other enclosures as required.

C. Notify *Consultant* in writing of interferences before installation.

D. Electrical conduit shall not be buried in concrete structures or slabs unless indicated otherwise.

### 1.5 FASTENINGS - GENERAL

A. Provide metal fastenings and accessories in same texture, colour and finish as adjacent materials.

B. Prevent electrolytic action and corrosion between dissimilar metals and materials by using suitable non-metallic strips, washers, sleeves, or other permanent separators to avoid direct contact.

C. Use non-corrosive fasteners and anchors for securing exterior work and in spaces where high humidity levels are anticipated.

D. Space anchors within individual load limit or shear capacity and ensure they provide positive permanent anchorage.

E. Keep exposed fastenings to a minimum, space evenly and install neatly.

F. Do not use fastenings or fastening methods that may cause spalling or cracking of material to which anchorage is made.

**1.6 FASTENINGS - EQUIPMENT**

A. Use fastenings of standard commercial sizes and patterns with material and finish suitable for service.

B. Bolts shall not project more than one diameter beyond nuts.

**1.7 FIRE RATED ASSEMBLIES**

A. When penetrating fire rated walls, ceiling, or floor assemblies, completely seal voids with fire-stopping materials, smoke seals, or both, in full thickness of the construction element as required to maintain the integrity of the fire rated assembly.

**1.8 LOCATION OF EQUIPMENT, FIXTURES, OUTLETS AND DEVICES**

A. Consider location of equipment, fixtures, outlets, and devices indicated on *Drawings* as approximate.

B. Locate fixtures, outlets, and devices to provide minimum interference, maximum usable space, and as required to meet safety, access, maintenance, acoustic, and regulatory, including barrier free, requirements, and in accordance with manufacturer's recommendations for safety, access, and maintenance.

C. Promptly notify *Consultant* in writing of conflicting installation requirements for fixtures, outlets, and devices. If requested, indicate proposed locations and obtain approval for actual locations.

D. Inform *Consultant* of impending installation and obtain his approval for actual location.

E. Submit field drawings to indicate relative position of various services and equipment when required by the *Consultant*.

**1.9 PROTECTION OF COMPLETED WORK AND WORK IN PROGRESS**

A. Adequately protect parts of the *Work* completed and in progress from any kind of damage.

B. Promptly remove, replace, clean, or repair, as directed by *Consultant*, work damaged as a result of inadequate protection.

C. Do not load or permit to be loaded any part of the *Work* with a weight or force that will endanger the safety or integrity of the *Work*.

**1.10 REMEDIAL WORK**

A. Notify *Consultant* of, and perform remedial work required to, repair or replace defective or unacceptable work. Ensure that properly qualified workers perform remedial work. Coordinate adjacent affected work as required.

B. Restore *Work* with new *Products* in accordance with requirements of *Contract Documents*.

## PART 2 - PRODUCTS NOT USED

## PART 3 - EXECUTION NOT USED

**END OF EXECUTION**

# SECTION 01 73 29
CUTTING AND PATCHING

## PART 1 - GENERAL

### 1.1 REQUEST FOR CUTTING, PATCHING AND REMEDIAL WORK

A. Submit written request in advance of cutting, coring, or alteration which affects or is likely to affect:
   1. Structural integrity of any element of the *Work*.
   2. Integrity of weather-exposed or moisture-resistant elements.
   3. Efficiency, maintenance, or safety of any operational element.
   4. Visual qualities of sight-exposed elements.
   5. Work of *Owner* or other contractors.
   6. Warranty of *Products* affected.

B. Include in request:
   1. Identification of *Project*.
   2. Location and description of affected work, including drawings or sketches as required.
   3. Statement on necessity for cutting or alteration.
   4. Description of proposed work, and *Products* to be used.
   5. Alternatives to cutting and patching.
   6. Effect on work of *Owner* or other contractors.
   7. Written permission of affected other contractors.
   8. Date and time work will be executed.

### 1.2 PRODUCTS

A. Unless otherwise specified, when replacing existing or previously installed *Products* in the course of cutting and patching work, use replacement *Products* of the same character and quality as those being replaced. Use materials whose installed performance will equal or surpass that of existing materials.

B. Where applicable, comply with *Specifications* for type *Work* to be performed.

C. If an existing or previously installed *Product* must be replaced with a different *Product*, submit request for substitution in accordance with Section 01 25 00 - Substitution Procedures.

### 1.3 PREPARATION

A. Inspect existing conditions in accordance with Section 01 71 00 - Examination and Preparation.

B. If unsafe or unsatisfactory conditions are encountered, take corrective action before proceeding.

C. Before start of *Work*, obtain and pay for all permits required by all authorities having jurisdiction and notify all interested utilities companies.

D. Obtain approval of Owner and authorities having jurisdiction for Work which affects existing exit-ways, exit stairs, means of egress, or access to, or exit from, areas.
   1. Review with and obtain approval of authorities for any temporary construction which affects such areas.

E. Provide supports to ensure structural integrity of surroundings; provide devices and methods to protect other portions of the *Work* from damage.

F. Protect existing construction during cutting and patching to prevent damage

G. Provide protection from elements for areas that may be exposed by uncovering work.

H. Before proceeding, meet at *Place of the Work* with parties involved in cutting and patching, including mechanical and electrical trades.

1. Review areas of potential interference and conflict.
2. Coordinate procedures and resolve potential conflicts before proceeding.

I. After uncovering existing conditions for *Work*, inspect conditions affecting installation of new *e*.

## 1.4 EXISTING UTILITIES

A. When breaking into or connecting to existing services' utilities, execute the *Work* at times directed by local governing authorities, with a minimum of disturbance to the *Work*, pedestrian and vehicular traffic, and ongoing *Owner* operations. When traffic is disrupted, provide sign-men.

B. Where the *Work* involves breaking into or connecting to existing building services, complete and submit a "Request for Utility Shut-down" form for any interruptions to building services, for necessary interruptions of mechanical or electrical service throughout the course of the *Work*. A copy of the form and procedures for its use and completion, are included in this Section.

C. Where unknown services are encountered, immediately advise *Consultant* and confirm findings in writing.

D. Remove abandoned service lines within two feet of structures, unless indicated otherwise. Cap or otherwise seal lines at cut-off points as instructed by *Consultant* and to suit code requirements.

E. Avoid cutting existing utilities, pipe, conduit, or ductwork serving the building but scheduled to be removed or relocated until alternate provisions have been provided.

F. Maintain excavations free of water.

G. Keep duration of interruptions to a minimum.

H. Carry out interruptions after regular working hours of occupants, preferably on weekends, unless *Owner*'s prior written approval is obtained.

I. Protect and maintain existing active services. Record location of services, including depth, on as-built drawings.

J. Construct or erect barriers in accordance with Section 01 56 00 - Temporary Barriers and Enclosures as required to protect pedestrian and vehicular traffic.

## 1.5 CUTTING, PATCHING, AND REMEDIAL WORK - GENERAL

A. Cutting of openings into new or existing structural members, other than those indicated, is strictly prohibited, unless authorized in writing by the *Consultant*.

B. Items to be salvaged and delivered to *Owner* shall be carefully removed and properly stored in an area easily accessible for removal by *Owner*.

C. The cutting and patching required for individual trades shall be the responsibility of the *Contractor*.

D. Ensure that all cutting and patching is completed in an acceptable manner without delay and to correct found deficiencies.

E. Avoid interference with use of adjoining areas or interruption of free passage to adjoining areas.

F. Do not cut and patch structural elements in a manner that would change their load-carrying capacity or load-deflection ratio.

G. Do not cut and patch operating elements or related components in a manner that would result in reducing their capacity to perform as intended. Do not cut and patch operating elements or related components in a manner that would result in increased maintenance or decreased operational life or safety.

H. Do not cut and patch construction exposed on exterior or in occupied spaces in a manner that would, in *Consultant*'s opinion, reduce the building's aesthetic or visual qualities. Do no cut and patch construction in a manner that would result in visual evidence of cutting and patching. Remove and replace construction which was cut and patched in a visually unsatisfactory manner.

I. Coordinate and perform the *Work* to ensure that cutting and patching work is kept to a minimum.

J. Perform cutting, fitting, patching, and remedial work to make the affected parts of the *Work* come together properly and complete the *Work*.

K. Provide openings in non-structural elements of the *Work* for penetrations of mechanical and electrical work.

L. Refer to mechanical and electrical *Specifications* for details re: removal, capping and other alterations including but not limited to conduit, wiring, fixtures, ducts, piping and other service lines.

M. Perform cutting by methods to avoid damage to other work

N. Provide proper surfaces to receive patching, remedial work, and finishing.

O. Employ original installer to perform cutting and patching for weather-exposed and moisture-resistant elements, and sight-exposed surfaces.

P. Ensure that cutting, patching, and remedial work does not jeopardize manufacturers' warranties.

Q. Cut rigid materials using masonry saw or core drill. Do not use pneumatic or impact tools without *Consultant*'s prior approval.

R. Refinish surfaces to match adjacent finishes. For continuous surfaces refinish to nearest intersection. For an assembly, refinish entire unit.

S. Fit work to pipes, sleeves, ducts, conduit, and other penetrations through surfaces with suitable allowance for deflection, expansion, contraction, acoustic isolation, and firestopping, while maintaining airtightness.

T. Maintain fire ratings of fire rated assemblies where cutting, patching, or remedial work is performed. Completely seal voids or penetrations of assembly with firestopping material to full depth or with suitably rated devices.

## 1.6 CUTTING – FIRE SEPARATION ALTERATIONS

A. Maintain all existing fire separations for the duration of the *Work*.

B. Provide fire and smoke penetration sealants at alterations and repairs in accordance with Section 07 84 00.

C. Provide continuous, solid framing, blocking or masonry around service penetrations through fire separations in accordance with the fire penetration sealant design to maintain the continuity of the fire separation.

D. Inspect and provide *Work* necessary to ensure a continuous smoke seal where indicated to existing walls within the *Place of the Work*.

## 1.7 CUTTING – MECHANICAL AND ELECTRICAL ALTERATIONS

A. Refer to mechanical and electrical documents. Provide all cutting and patching for access to execute service alterations. Conceal capped services or remove back to main unless specifically noted otherwise.

B. Repair adjacent construction or surfaces disturbed as a result of alterations.

## 1.8 CUTTING TO ACCOMMODATE DEMOLITION AND REMOVALS

A. Execute cutting neatly and carefully, no larger than necessary, employing workers skilled in the erection of the part of the *Work*, or the part of the existing building being cut.

B. Maintain integrity and continuity of fire separations at all times. Provide smoke and fire seals at cut parts of the *Work*, equal to existing.

C. Saw-cut floors, walls and ceilings accurately. Provide openings no larger than necessary to accommodate new work. Core drill circular holes in concrete. Accurately cut new holes for mechanical and electrical devices and fixtures and for other recessed items.

**1.9 REMOVAL OF FLOORING AND PREPARATION OF SUBSTRATE**

A. Remove flooring and adhesive/setting bed materials completely, down to structural substrate unless otherwise noted.

B. Grind high spots and scrape substrate to a smooth, level surface. Remove any ridges or trowel marks.

C. Fill new and existing depressions, dished areas, low spots, voids, gaps, cracks, joints, holes and other substrate defects with skim coat and self-leveling topping to achieve a flat substrate t within the following tolerances. All materials used to prep the substrate must be compatible with finish floor adhesives etc.
   1. 3mm total maximum deviation + and – along a 3000mm straight edge applied omni-directionally over the entire floor area.

D. Provide skim coats, primers and bonding agent slurries to neutralize residue adhesives and setting beds and to provide a suitable substrate to received scheduled flooring type.

**1.10 REMOVAL OF MASONRY WALLS AND TERRAZZO FLOOR BASES**

A. Remove masonry walls and terrazzo floor bases completely back to structural substrate.

B. Remove sufficient material to provide a depression for leveling toppings to achieve flat substrate to receive new finishes.

C. Terrazzo floor base shall be removed completely in association with wall demolition as shown on drawings. Terrazzo floor base removal shall include the provision for and supply of concrete infill and cementitious topping as required to provide a level surface for new finish floor.

D. Where existing masonry walls are indicated to be removed, ensure adjacent walls are braced securely and all structural and decorative elements removed t the underside of the structure above.

**1.11 MATCHING AND PATCHING**

A. Where items are removed from existing walls, ceilings, floors or partitions to remain, repair wall, ceiling, floor or partition disturbed by removal.

B. Where walls, ceilings, floors or partitions are removed, repair abutting walls, ceilings or floors disturbed by removal.

C. Where existing construction is cut, removed or otherwise disturbed to permit installation of new *Work*, match and patch existing disturbed construction.

D. Use methods and materials similar in appearance, and equal in quality to areas or surfaces being repaired.

E. Restore *Work* which has been cut or removed; install new products to provide completed *Work* in accord with requirements of *Contract Documents*.

F. Patch work to match existing work and adjacent surfaces.

G. Re-finish entire surfaces as necessary to provide an even finish to match adjacent finishes.
   1. Continuous surfaces; to nearest intersection or break in surface such as inside or outside corner or minimum 1525mm horizontally beyond patched area and full height of wall, whichever is nearest.
   2. Assembly - entire refinishing.

H. In existing areas remove and replace existing ceilings and finishes for installation of *Work* of other trades. Locations may not be identified on architectural drawings. Refer to mechanical and electrical documents for coordination of locations.
   1. If existing ceiling can not be satisfactorily reinstalled, replace with like materials and construction.
   2. Replace damaged construction with like materials.

### 1.12 PATCHING ADJACENT TO DEMOLITION AREAS

A. After cutting is completed, patch and re-finish existing surfaces to remain t the nearest break in surface such as inside and outside corners or a minimum 1525mm 5FT horizontally and full height of walls from floor to ceiling.

B. Patch parts of *Work* to match adjacent construction and finishes unless otherwise specified or indicated on drawings.

## PART 2 - PRODUCTS NOT USED

## PART 3 - EXECUTION NOT USED

## END OF CUTTING AND PATCHING

This page intentionally left blank.

# SECTION 01 74 00

CLEANING AND WASTE MANAGMENT

## PART 1 - GENERAL

### 1.1 REGULATORY REQUIREMENTS

A. Comply with applicable regulatory requirements when disposing of waste materials.

B. Obtain permits from authorities having jurisdiction and pay disposal fees where required for disposal of waste materials and recyclables.

### 1.2 GENERAL CLEANING REQUIREMENTS

A. Provide adequate ventilation during use of volatile or noxious substances. Do not rely on building ventilation systems for this purpose.

B. Use only cleaning materials recommended by manufacturer of surface to be cleaned, and as recommended by cleaning material manufacturer.

C. Prevent cross-contamination during the cleaning process.

D. In occupied spaces, vacuum cleaning of area of work to be done utilizing HEPA filter equipped vacuum.

E. Notify the *Consultant* of the need for cleaning caused by *Owner* or *Other Contractors*.

F. Before applying for *Substantial Performance of the Work*, the *Contractor* shall remove waste products and debris, other than that resulting from the work of the *Owner*, *Other Contractors*, or their employees, and shall leave the *Place of the Work* clean and suitable for use or occupancy by the *Owner*.

### 1.3 POLLUTION CONTROL

A. Control emissions from equipment and plant to local authorities emission requirements.

B. Prevent dust and other extraneous materials from contaminating air beyond application area, by providing temporary enclosures.

C. Cover or wet down dry materials and rubbish to prevent blowing dust and debris. Wet down dusty materials prior to moving them through the existing building or cover with wet drape to prevent dust from tracking through building spaces.

### 1.4 PROGRESSIVE CLEANING AND WASTE MANAGEMENT

A. Maintain the *Work* in a tidy and safe condition, free from accumulation of waste materials and construction debris.

B. Fires and burning of rubbish at *Place of the Work* is not permitted.

C. Burying rubbish and waste materials at *Place of the Work* is not permitted.

D. Provide and pay for on-site clearly marked waste containers for collection of waste materials, recyclables and debris.

E. Remove waste materials and recyclables from work areas, separate, and deposit in designated containers at end of each *Working Day*. Collect packaging materials for recycling or reuse.

F. Remove waste materials and recyclables from *Place of the Work* daily. When removing waste through occupied areas, cover waste container with a wet drape.

G. Sort separate materials to be reused/recycled into specified sort areas.

H. Store volatile waste in covered metal containers and remove from premises at end of each *Working Day*.

I. Do not dispose of waste or volatile materials, such as mineral spirits, oil or paint thinner into waterways, storm or sanitary sewers.

J. Clean interior building areas prior to start of finish work and maintain free of dust and other contaminants during finishing operations.

K. Schedule cleaning operations so that resulting dust, debris and other contaminants will not fall on wet, newly finished surfaces nor contaminate building systems.

L. Clear snow and ice from public sidewalks as required to comply with applicable municipal regulatory requirements.

**1.5 FINAL CLEANING**

A. Remove from *Place of the Work* surplus *Products*, waste materials, recyclables, *Temporary Work*, and *Construction Equipment* not required to perform any remaining work.

B. Standards include, but are not limited to:
1. Floors and baseboards are to be free of construction material, stains, visible dust and streaks.
2. Walls, ceilings and doors are to be free of visible dust, gross soils, streaks and handprints.
3. All horizontal surfaces are to be free of visible dust and streaks. This includes, but is not limited to, furniture, window ledges, overhead lighting, phones, picture frames, carpets, etc.
4. Bathroom fixtures, including toilets, sinks, tubs and showers, are to be free of streaks, soil and stains.
5. Mirrors and windows are to be free of visible dust and streaks.
6. Dispensers are to be free of dust.

C. Standards will be achieved through the following processes:
1. Wet mopping of floors.
2. Wet dusting of walls and horizontal surfaces.
3. Use of special products for glass, chrome and plastic to leave streak free.
4. Final vacuuming, using a power head and a HEPA filter equipped vacuum that will not generate dust.
5. Water and general purpose disinfecting solutions must be changed when they become cloudy or cause streaking on cleaned surfaces.

D. The Contractor will use chemical and products which are currently in use by the facility. A list of these chemicals and products will be available from the Owner and may change at any time without notice. It is the Contractors responsibility to be aware of and use the chemicals and products which are in use at the time cleaning operations commence. Information available will include:
1. Local supplier.
2. Name and order number of chemical or product.
3. Area of facility where chemical or product is currently in use.
4. Dilution of chemical or product acceptable to facility.
5. Finish and material for which chemicals or products are to be used.
6. Variations from products listed will not be accepted without prior written approval from Environmental Services or the Owner's Infection Control Practitioner.

E. Re-clean as necessary areas that have been accessed by *Contractor*'s workers prior to *Owner* occupancy.

F. Vacuum clean and dust exposed wall, floor, and ceiling surfaces, behind grilles, louvres, heating registers and screens, ducts, fans, blowers and coils if units were operated without filters during construction.

G. Clean mechanical, electrical, and other equipment. Replace filters for mechanical equipment if equipment is used during construction.

H. Prepare floor finishes as recommended by manufacturer and in coordination with the *Owner*.

I. Clean interior window glass and frames.

J. Make good any damage caused by the completion of the *Work*, outside the *Place of the Work*, including necessary cleaning.

K. Upon completion of cleaning operations, close off area to all but authorized personnel.

L. Upon completion of final cleaning, remove cleaning equipment, excess materials and debris from building and site.

### 1.6 WASTE MANAGEMENT AND DISPOSAL

A. Dispose of waste materials and recyclables at appropriate municipal landfills and recycling facilities in accordance with applicable regulatory requirements.

B. Do not burn or bury waste materials at *Place of the Work*.

C. Do not dispose of volatile and other liquid waste such as mineral spirits, oil, paints and other coating materials, paint thinners, cleaners, and similar materials together with dry waste materials or on the ground, in waterways, or in storm or sanitary sewers. Collect such waste materials in appropriate covered containers, promptly remove from *Place of the Work*, and dispose of at recycling facilities or as otherwise permitted by applicable regulatory requirements.

D. Cover or wet down dry waste materials to prevent blowing dust and debris.

## PART 2 - PRODUCTS NOT USED

## PART 3 - EXECUTION NOT USED

## END OF CLEANING AND WASTE MANAGMENT

This page intentionally left blank.

# SECTION 01 77 00
CLOSEOUT PROCEDURES

## PART 1 - GENERAL

### 1.1 READY-FOR-TAKEOVER

A. The prerequisites to attaining *Ready-for-Takeover* of the *Work* are described in the General Conditions of the *Contract*.

### 1.2 INSPECTION AND REVIEW BEFORE READY-FOR-TAKEOVER

A. *Contractor*'s Inspection: Before applying for the *Consultant*'s review to establish *Ready-for-Takeover* of the *Work*:
   1. Ensure that the specified prerequisites to *Ready-for-Takeover* of the *Work* are completed.
   2. Conduct an inspection of the *Work* to identify defective, deficient, or incomplete work.
   3. Prepare a comprehensive and detailed list of items to be completed or corrected.
   4. Provide an anticipated schedule and costs for items to be completed or corrected.

B. *Consultant*'s Review: Upon receipt of the *Contractor*'s application for review, together with the *Contractor*'s list of items to be completed or corrected, the *Consultant* will review the *Work*. The *Consultant* will advise the *Contractor* whether or not the *Work* is *Ready-for-Takeover* and will provide the *Contractor* with a list of items, if any, to be added to the *Contractor*'s list of items to be completed or corrected. Provide the *Consultant* with a copy of the *Contractor*'s revised list.

C. Maintain the list of items to be completed or corrected and promptly correct or complete defective, deficient and incomplete work. The Contractor's inspection and *Consultant*'s review procedures specified above shall be repeated until the *Work* is *Ready-for-Takeover* and no items remain on the *Contractor*'s list of items to be completed or corrected.

D. When the *Consultant* determines that the *Work* is *Ready-for-Takeover*, the *Consultant* will notify the *Contractor* and the *Owner* in writing to that effect.

### 1.3 PREREQUISITES TO FINAL PAYMENT

A. After *Ready-for-Takeover* of the *Work* and before submitting an application for final payment in accordance with the General Conditions of Contract:
   1. Correct or complete all remaining defective, deficient, and incomplete work.
   2. Remove from the *Place of the Work* all remaining surplus *Products*, *Construction Equipment*, and *Temporary Work*.
   3. .3 Perform final cleaning and waste removal necessitated by the *Contractor*'s work performed after *Ready-for-Takeover*, as specified in Section 01 74 00 – Cleaning and Waste Management.

### 1.4 SUBSTANTIAL PERFORMANCE OF THE WORK

A. The prerequisites to, and the procedures for, attaining substantial performance of the *Work*, or similar such milestone as provided for in the lien legislation applicable to the *Place of the Work*, shall be:
   1. Independent of those for attaining *Ready-for-Takeover* of the *Work*, and
   2. In accordance with the lien legislation applicable to the *Place of the Work*.

## PART 2 - PRODUCTS NOT USED

## PART 3 - EXECUTION NOT USED

**END OF CLOSEOUT PROCEDURES**

# SECTION 01 78 00
CLOSEOUT SUBMITTALS

## PART 1 - GENERAL

### 1.1 OPERATION AND MAINTENANCE MANUAL

A. Prepare a comprehensive operation and maintenance manual, in the language of the *Contract*, using personnel qualified and experienced for this task.

B. Submit an initial draft of the operation and maintenance manual for *Consultant*'s review. If required by *Consultant*'s review comments, revise manual contents and resubmit for *Consultant*'s review. If required, repeat this process until *Consultant* accepts the draft manual in writing.

C. Submit final version to *Consultant* in hard copy and electronic format. Provide one hard copy and two electronic copies on separate storage devices.

D. Pay costs of transportation of submissions.

### 1.2 OPERATION AND MAINTENANCE MANUAL FORMAT

A. Organize data in the form of an instructional manual.

B. Binders: vinyl, hard covered, three (3) D-rings, loose leaf, letter size, with spine and face pockets.

C. When multiple binders are used, correlate data into related consistent groupings. Identify contents of each binder on spine.

D. Cover: Identify each binder with typed or printed title "Project Record Documents", name of *Project* or facility, and subject matter of contents.

E. Arrange content by systems, under Section numbers and sequence of Table of Contents.

F. Provide tabbed fly leaf for each separate *Product* or system, with typed description of *Product* and major component parts of equipment.

G. Text: Manufacturer's printed data, or typewritten data.

H. Drawings: provide with reinforced punched binder tab. Bind in with text; fold larger drawings to size of text pages.

A. Provide digital copy of Operation and Maintenance Manual in PDF format, organized in same form as binders, on single USB memory stick.

B. Provide electronic copy of Shop *Drawings* in manual as scaled CAD files in .dwg format on CD-ROM or USB flash drive.

### 1.3 OPERATION AND MAINTENANCE MANUAL – GENERAL CONTENT

A. Table of contents for each volume.

B. Introductory information including:
   1. Title of *Project*.
   2. Date of manual submission.
   3. Complete contact information for *Consultant*, subconsultants, other consultants, and *Contractor*, with names of responsible parties.
   4. Schedule of *Products* and systems indexed to content of volume.

C. For each *Product* or system, include complete contact information for *Subcontractors*, *Suppliers* and manufacturers, including local sources for supplies and replacement parts.

D. *Product* Data: mark each sheet to clearly identify specific products, options, and component parts, and data applicable to installation. Delete or strike out inapplicable information. Supplement with additional information as required.

E. Typewritten text: as required to supplement *Product* data. Provide logical sequence of instructions for each procedure, incorporating manufacturer's instructions specified in Section 01 40 00.

F. Reviewed *Shop Drawings*.

G. Drawings: supplement *Product* data to illustrate relations of component parts of *Products* and systems, to show control and flow diagrams.

H. Permits, certificates, letters of assurance and other relevant documents issued by or required by authorities having jurisdiction.

I. Warranties.

J. Operating and maintenance procedures, incorporating manufacturer's operating and maintenance instructions, in a logical sequence.

K. Training materials as specified in Section 01 79 00 - Demonstration and Training.

## 1.4 OPERATION AND MAINTENANCE MANUAL - EQUIPMENT AND SYSTEMS CONTENT

A. Each Item of Equipment and Each System: include description of unit or system and component parts. Give function, normal operation characteristics, and limiting conditions. Include performance curves, with engineering data and tests, and complete nomenclature and commercial number of replaceable parts.

B. Panel Board Circuit Directories: provide electrical service characteristics, controls, and communications.

C. Include installed colour coded wiring diagrams.

D. Operating Procedures: include start-up, break-in, and routine normal operating instructions and sequences. Include regulation, control, stopping, shut-down, and emergency instructions. Include summer, winter, and any special operating instructions.

E. Maintenance Requirements: include routine procedures and guide for trouble-shooting; disassembly, repair, and reassembly instructions; and alignment, adjusting, balancing, and checking instructions.

F. Provide servicing and lubrication schedule, and list of lubricants required.

G. Include manufacturer's printed operation and maintenance instructions.

H. Include sequence of operation by controls manufacturer.

I. Provide original manufacturer's parts list, illustrations, assembly drawings, and diagrams required for maintenance.

J. Provide installed control diagrams by controls manufacturer.

K. Provide *Contractor*'s coordination drawings, with installed colour coded piping diagrams.

L. Provide charts of valve tag numbers, with location and function of each valve, keyed to flow and control diagrams.

M. Provide list of original manufacturer's spare parts, current prices, and recommended quantities to be maintained in storage.

N. Include testing and balancing reports.

O. Include additional content as specified in technical *Specifications* sections.

## 1.5 OPERATION AND MAINTENANCE MANUAL - PRODUCTS AND FINISHES CONTENT

A. Include *Product* data, with catalogue number, options selected, size, composition, and colour and texture designations. Provide information for re-ordering custom manufactured *Products*.

B. Instructions for cleaning agents and methods, precautions against detrimental agents and methods, and recommended schedule for cleaning and maintenance.

C. Include an outline of requirements for routine and special inspections and for regular maintenance to ensure that on-going performance of the building envelope will meet the initial building envelope criteria.

D. Include additional content as specified in technical *Specifications* sections.

## 1.6 OPERATION AND MAINTENANCE MANUAL - WARRANTIES CONTENT

A. Obtain warranties and bonds, executed in duplicate by warrantors within ten days after completion of the applicable item of work. Except for items put into use with *Owner*'s permission, leave date for beginning of time of warranty blank until the date of *Substantial Performance of the Work* is determined. Co-execute when required. Retain warranties and bonds until time specified for submittal.

B. Separate each warranty with index tab sheets keyed to Table of Contents listing.

C. List each warrantor with complete contact information.

D. Verify that documents are in proper form and contain full information. Ensure that warranties are for the correct duration and are in *Owner*'s name.

## 1.7 CONTRACTOR'S AS-BUILT DRAWINGS

A. Create one set of comprehensive as-built documents. Record information on set of black line, opaque drawings, and in the copy of Project Manual provided by *Consultant*.

B. Provide felt tip marking pens, maintaining separate colours for each major system, for recording information.

C. Record information concurrently with construction progress. Do not conceal work until required information is recorded.

D. *Drawings* and *Shop Drawings*: legibly mark each item to record actual construction, including:
   1. Measured depths of elements of foundation in relation to finish first floor datum.
   2. Measured horizontal and vertical locations of underground utilities and appurtenances, referenced to permanent surface improvements.
   3. Measured locations of internal utilities and appurtenances, referenced to visible and accessible features of construction.
   4. Field changes of dimension and detail.
   5. Changes made by *Change Orders*.
   6. Details not on original *Drawings*.
   7. References to related *Shop Drawings* and modifications.

E. Project Manual: legibly mark each item to record actual construction, including:
   1. Manufacturer, trade name, and catalogue number of each product actually installed, particularly optional items and substitute items.
   2. Changes made by addenda and *Change Orders*.

F. Other documents: maintain manufacturer's certifications, inspection certifications, field test records required by individual and specifications sections.

G. Prior to *Substantial Performance of the Work*, submit one set of completed as-built documents for review by the *Consultant*.

H. Following review and acceptance of as-built documents by the *Consultant*, transfer information to CAD drawings and Project Manual. Submit completed record documents for use by the *Owner*.

## 1.8 PROJECT RECORD DRAWINGS

A. Transfer all information marked up on the as-built drawings during the progress of the *Work* to a master set of record drawing files provided by *Consultant*, in PDF electronic format.

B. Mark revised drawings as "RECORD DRAWINGS".

C. Submit completed record drawings in hard copy and electronic form to *Owner* and *Consultant*. Provide one (1) hard copy set.

D. In addition to requirements in General Conditions, maintain at the site for *Consultant* one record copy of:
1. *Drawings*.
2. Project Manual.
3. Addenda.
4. *Supplemental Instructions*.
5. *Change Orders* and other modifications to the *Contract*.
6. Reviewed *Shop Drawings*, *Product* data, and samples.
7. Field test records.
8. Inspection certificates.
9. Manufacturer's certificates.

E. Store record documents and samples in field office apart from documents used for construction. Provide files, racks, and secure storage.

F. Label record documents and files in accordance with section number listings in List of Contents of this Project Manual. Label each document "PROJECT RECORD" in neat, large, printed letters.

G. Maintain record documents in clean, dry and legible condition. Do not use record documents for construction purposes.

H. Keep record documents and samples available for inspection by *Consultant*.

## 1.9 SPARE PARTS, MAINTENANCE MATERIALS, AND SPECIAL TOOLS

A. Supply spare parts, maintenance materials, and special tools in quantities specified in technical *Specifications* sections.

B. Ensure spare parts and maintenance materials are new, not damaged nor defective, and of same quality, manufacturer, and batch or production run as installed *Products*.

C. If requested, furnish evidence as to type, source and quality of products provided.

D. Defective products will be rejected, regardless of previous inspections. Replace products at own expense.

E. Provide tags for special tools identifying their function and associated *Product*.

F. Deliver to and store items at location directed by *Owner* at *Place of the Work*. Store in original packaging with manufacturer’s labels intact and in a manner to prevent damage or deterioration.

G. Remove and replace damaged *Products* at own expense and to satisfaction of the *Consultant*.

H. Obtain receipt for delivered products and submit prior to final payment.

I. Catalogue all items and submit to *Consultant* an inventory listing organized by *Specifications* section. Include *Consultant* reviewed inventory listing in operation and maintenance manual.

## PART 2 - PRODUCTS NOT USED

## PART 3 - EXECUTION NOT USED

**END OF CLOSEOUT SUBMITTALS**

This page intentionally left blank.

# SECTION 02 41 99
DEMOLITION

## PART 1 - GENERAL

### 1.1 RELATED SECTIONS

A. Section 01 71 00 – Examination and Preparation

B. Section 01 74 00 – Cleaning and Waste Management

C. Section 02 61 33 – Designated Substance Report

### 1.2 REFERENCES

A. Canadian Standards Association (CSA International)
   1. CSA S350-M1980(R2003), Code of Practice for Safety in Demolition of Structures.

### 1.3 SUBMITTALS

A. Submit *Shop Drawings* in accordance with Sections 01 33 00.

B. Before proceeding with demolition of load bearing walls or of other walls and where required by authority having jurisdiction submit for review by *Consultant* shoring and underpinning drawings prepared by qualified professional engineer registered or licensed in the Province of Ontario, showing proposed method.

### 1.4 SITE CONDITIONS

A. Review "Designated Substance Report" and take precautions to protect environment.

B. Should material resembling spray or trowel-applied asbestos or other designated substance listed as hazardous be encountered, stop work, take preventative measures, and notify *Consultant* immediately.
   1. Do not proceed until written instructions have been received from *Consultant*.

C. Notify *Consultant* before disrupting building access or services.

## PART 2 - PRODUCTS

### 2.1 NOT USED

## PART 3 - EXECUTION

### 3.1 PREPARATION

A. Inspect area of work with *Consultant* and verify extent and location of items designated for removal, disposal, alternative disposal, recycling, salvage and items to remain.

B. Locate and protect utilities. Preserve active utilities traversing site in operating condition.

C. Notify and obtain approval of utility companies before starting demolition.

D. Disconnect, cap, plug or divert, as required, existing public utilities within the property where they interfere with the execution of the work, in conformity with the requirements of the authorities having jurisdiction. Mark the location of these and previously capped or plugged

services on the site and indicate location (horizontal and vertical) on the record drawings. Support, shore up and maintain pipes and conduits encountered.

1. Immediately notify *Consultant* and utility company concerned in case of damage to any utility or service, designated to remain in place.
2. Immediately notify the Engineer should uncharted utility or service be encountered, and await instruction in writing regarding remedial action.

**3.2 PROTECTION**

A. Prevent movement, settlement, or damage to adjacent structures, utilities, landscaping features and parts of building to remain in place. Provide bracing and shoring required.

B. Keep noise, dust, and inconvenience to occupants to minimum.

C. Protect building systems, services and equipment.

D. Provide temporary dust screens, covers, railings, supports and other protection as required.

E. Do *Work* in accordance with Section 01 35 30.

**3.3 SALVAGE**

A. Refer to demolition drawings and specifications for items to be salvaged for reuse.

B. Remove items to be reused, store as directed by *Consultant*, and re-install under appropriate section of specification.

**3.4 SITE REMOVALS**

A. Remove items as indicated.

**3.5 DEMOLITION**

A. Remove parts of existing building to permit new construction. Sort waste materials into appropriate piles for reuse and recycling.

B. Trim edges of partially demolished building elements to tolerances as defined by *Consultant* to suit future use.

**3.6 DISPOSAL**

A. Dispose of removed materials, to appropriate recycling facilities and reuse facilities except where specified otherwise, in accordance with authority having jurisdiction.

B. See also Section 01 74 00.

**END OF DEMOLITION**

# SECTION 02 61 33
DESIGNATED SUBSTANCES REPORT

## PART 1 - GENERAL

### 1.1 REGULATORY REQUIREMENTS

A. A Designated Substances Report for this site has been completed by the *Owner* to fulfill the requirements under Section 30 of the Ontario Occupational Health and Safety Act, Revised Statutes of Ontario, 1990, Chapter 0.1as amended by O. Reg. 631/94. The Designated Substances are identified in the Occupational Health and Safety Act O. Reg. 213/91 as amended by O. Reg. 426/21.

B. The disturbance of asbestos materials on construction projects is controlled by Ontario Regulation 278/05.

C. The revised Regulation of Ontario (1990), Regulation 843 as amended by Ontario Regulation 109/04 (formerly Ontario Ministry of Labour Regulation 536/81) under the Occupational Health and Safety Act outlines the requirement to control airborne lead in industrial establishments. Exposure levels and respiratory protection in this regulation also apply to construction projects at a workplace where workers are likely to be exposed to lead.

D. The revised Regulation of Ontario (1990), Regulation 845 as amended by Ontario Regulation 606/05 (formerly Ontario Ministry of Labour Regulation Respecting Silica 769/83) which amends the Occupational Health and Safety Act, outlines the requirement to control airborne silica in industrial establishments. Exposure levels and respiratory protection in this regulation also apply to construction projects at a workplace where workers are likely to be exposed to lead.

E. All *Contractors* requesting bids from *Subcontractors* shall provide the required information to *Subcontractors*.

### 1.2 VALIDITY DATE

A. A designated substances survey for the *Place of the Work* has been conducted. Information provided is based on previous site visits to the building and sample information obtained from *Owner*'s reports. Since that time, designated substances may have been removed from or added to the project area.

B. Prior to beginning work confirm with *Owner* that additional designated substances have not been brought to the *Place of the Work*.

C. Due to the nature of building demolition, some inherent limitations exist as to the possible thoroughness of the designated substance survey. The survey did not include the demolition of floors, floor finishes, plaster ceilings or walls or other areas to examine concealed conditions. In addition, the survey does not refer to substances that may be present in the day-to-day usage of specialized equipment.

D. There is a possibility that materials may exist which could not reasonably be identified within the scope of this assessment, or which were not apparent during the site visit.

### 1.3 OCCUPATIONAL HEALTH AND SAFETY ACT

A. The following is an amendment to Bill 208 "An act to amend the Occupational Health and Safety Act, The Workers' Compensation Act" subsequently identified as amendment 18a. The following outlines the responsibilities of each party of the *Contract* as it relates to amendment 18a.

B. Duty of *Owner*: Before beginning a project, the *Owner* shall determine whether any designated substances are present at the *Place of the Work* and shall prepare a list of all designated substances that are present at the site.
   1. Tenders: If any work on a *Project* is tendered, the person issuing the tenders shall include, as part of the tendering information, a copy of the list referred to in subsection (1).
   2. Idem: An *Owner* shall ensure that a prospective constructor of a project on the *Owner*'s property has received a copy of the list referred to in subsection (1) before entering into a binding contract with the constructor.

C. Duty of Constructors: The constructor for a project shall ensure that each prospective contractor and subcontractor for the project has received a copy of the list referred to in subsection (1) before the prospective contractor or subcontractor enters into a binding contract for the supply of work on the project.
   1. Liability: An *Owner* who fails to comply with this section is liable to the constructor and every contractor and subcontractor who suffers loss or damages as the result of the subsequent discovery on the *Project* of a designated substance that the *Owner* ought reasonably to have known of but that was not on the list prepared under subsection (1).
   2. Idem: A constructor who fails to comply with this section is liable to every contractor and subcontractor who suffers any loss or damages as the result of the subsequent discovery on the project of a designated substance that was on the list prepared under subsection (1).
   3. WHMIS Inventory is available from the *Owner* through the office of the *Consultant*

## PART 2 - DESIGNATED SUBSTANCES

### 2.1 REPORTS

The report is entitled " *Hazardous Building Materials Assessment (Pre-construction) Sorting Room, Jeanne Mance Level 0, Hotel Dieu Hospital 166 Brock Street, Kingston, Ontario* prepared for *Kingston Health Sciences Centre, 24 Barrie Street, Kingston, Ontario, K7L 2V7* as completed by *Pinchin Ltd*. and is *included within this Project Manual* and available for viewing at the office of the Owner at the *Kingston Health Sciences Centre Planning Office located at 24 Barrie Street, Kingston, Ontario*.

A. It is the *Contractor*'s responsibility to be aware of the contents of the report.

## PART 3 - EXECUTION NOT USED

**END OF DESIGNATED SUBSTANCES REPORT**

# Hazardous Building Materials Assessment (Pre-construction)

Sorting Room, Jeanne Mance Level 0
Hotel Dieu Hospital
166 Brock Street, Kingston, Ontario

Prepared for:

Kingston Health Science Centre
24 Barrie Street
Kingston, Ontario, K7L 2V7

February 1, 2022

Pinchin File: 287280.011

© 2022 Pinchin Ltd.

| | |
|---|---|
| **Issued to:** | **Kingston Health Science Centre** |
| **Issued on:** | **February 1, 2022** |
| **Pinchin File:** | **287280.011** |
| **Issuing Office:** | **Kingston, ON** |

Author: Kristen Vanderburgt
Project Technologist
613.541.1013 ext. 1613
kvanderburgt@pinchin.com

Reviewer: Sarah Young, C.Tech.
Operations Manager
613.541.1013 ext. 1609
syoung@pinchin.com

© 2022 Pinchin Ltd.

## EXECUTIVE SUMMARY

Kingston Health Science Centre (Client) retained Pinchin Ltd. (Pinchin) to conduct a hazardous building materials assessment at Hotel Dieu Hospital located at 166 Brock Street, Kingston, Ontario. Pinchin performed the assessment on January 13, 2022.

The objective of the assessment was to identify specified hazardous building materials in preparation for building renovation. The proposed work as identified by the Client includes completed renovations to the Sorting Room in Jeanne Mance Level 0.

The assessed area was limited to the part of the building, which consisted of Room JM0-130-0 and a portion of Room JM0-119-0 (Locations 329 and 348), as shown on the drawings in Appendix I.

## SUMMARY OF FINDINGS

The following is a summary of significant findings; refer to the body of the report for detailed findings:

Asbestos: Asbestos-containing materials were not found in the assessed area.

Lead:

- Lead in paints is present as follows:
  - Low levels of lead present in beige paint on wood cabinets.

Silica: Crystalline silica is present in concrete, mortar, masonry, drywall and ceiling tiles.

Mercury: Mercury vapour is present in lamp tubes and liquid mercury is present in manometers.

Polychlorinated Biphenyls (PCBs): PCBs are not present in the assessed area.

Mould and Water Damage: Water damage was observed on approximately three square feet of terrazzo flooring in Room JM0-130-0 (Location 348).

© 2022 Pinchin Ltd.

## SUMMARY OF RECOMMENDATIONS

The following is a summary of significant recommendations; refer to the body of the report for detailed recommendations:

1. Conduct further investigation of the following items, which was not completed during this assessment:
   a. Materials concealed or outside of the assessed area.
2. Do not disturb suspected hazardous building materials discovered during the planned work, which have not been identified in this report and arrange for further evaluation and testing.
3. Remove and properly dispose of asbestos-containing materials prior to renovation activities.
4. Recycle mercury-containing lamp tubes and manometers when removed from service.
5. Follow appropriate safe work procedures when handling or disturbing asbestos, lead, silica and mould.

*This Executive Summary is subject to the same standard limitations as contained in the report and must be read in conjunction with the entire report.*

© 2022 Pinchin Ltd.

## TABLE OF CONTENTS

1.0 INTRODUCTION AND SCOPE ..... 1
- 1.1 Scope of Assessment ..... 1

2.0 METHODOLOGY ..... 2

3.0 BACKGROUND INFORMATION ..... 2
- 3.1 Building Description ..... 2

4.0 FINDINGS ..... 3
- 4.1 Asbestos ..... 3
- 4.2 Lead ..... 6
- 4.3 Silica ..... 7
- 4.4 Mercury ..... 7
- 4.5 Polychlorinated Biphenyls ..... 8
- 4.6 Mould and Water Damage ..... 8

5.0 RECOMMENDATIONS ..... 9
- 5.1 General ..... 9
- 5.2 Building Renovation Work ..... 9

6.0 TERMS AND LIMITATIONS ..... 10

7.0 REFERENCES ..... 10

## APPENDICES

| | |
|---|---|
| APPENDIX I | Drawing |
| APPENDIX II-A | Asbestos Analytical Certificates |
| APPENDIX II-B | Lead Analytical Certificates |
| APPENDIX II-C | PCB Analytical Certificates |
| APPENDIX III | Methodology |
| APPENDIX IV | Location Summary Report |
| APPENDIX V | Hazardous Materials Summary Report / Sample Log |
| APPENDIX VI | HMIS All Data Report |

© 2022 Pinchin Ltd.

## 1.0 INTRODUCTION AND SCOPE

Kingston Health Science Centre (Client) retained Pinchin Ltd. (Pinchin) to conduct a hazardous building materials assessment at Hotel Dieu Hospital located at 166 Brock Street, Kingston, Ontario.

Pinchin performed the assessment on January 13, 2022. The surveyor was unaccompanied during the assessment. The assessed area was occupied at the time of the assessment.

The objective of the assessment was to identify specified hazardous building materials in preparation for building renovation.

The renovations being performed to replace the existing tray washer conveyor as well as upgrades to interior finishes throughout the assessed area.

### 1.1 Scope of Assessment

The **assessed area** is limited to the portion(s) of the building to renovated, as described by the Client and identified in the drawings in Appendix I.

The assessment was performed to establish the type of specified hazardous building materials, locations and approximate quantities incorporated in the structure(s) and its finishes.

For the purpose of the assessment and this report, hazardous building materials are defined as follows:

- Asbestos.
- Lead.
- Silica.
- Mercury.
- Polychlorinated Biphenyls (PCBs).
- Mould.

The following Designated Substances are not typically found in building materials in a composition/state that is hazardous and were not included in this assessment:

- Arsenic.
- Acrylonitrile.
- Benzene.
- Coke oven emissions.
- Ethylene oxide.
- Isocyanates.

© 2022 Pinchin Ltd.

- Vinyl chloride monomer.

## 2.0 METHODOLOGY

Pinchin conducted a room-by-room assessment (rooms, corridors, service areas, exterior, etc.) to identify the hazardous building materials as defined in the scope.

The assessment included limited demolition of wall and ceiling finishes (drywall or plaster) to view concealed conditions at representative areas as permitted by the current building use. Limited destructive testing of flooring was conducted where possible (under ceramic tiles, carpets or multiple layers of flooring). Demolition of exterior building finishes, masonry walls (chases, shafts etc.), and structural surrounds was not conducted.

Limited demolition of masonry block walls (core holes) was conducted to investigate for loose fill vermiculite insulation.

Sampling of roofing materials was not conducted.

For further details on the methodology including test methods, refer to Appendix III.

## 3.0 BACKGROUND INFORMATION

### 3.1 Building Description

| Description Item | Details |
|---|---|
| Use | Hospital |
| Number of Floors | Assessed area limited to one level (level zero) |
| Total Area | The assessed area is approximately 1,860 square feet |
| Year of Construction | The building was constructed in 1979-1984 |
| Structure | Structural steel and concrete |
| Exterior Cladding | Not assessed (outside of scope) |
| HVAC | Air handing units and boiler with hot water heating to radiators |
| Roof | Not assessed (outside of scope) |
| Flooring | Terrazzo |
| Interior Walls | Concrete block and exposed concrete structure |
| Ceilings | Acoustic ceiling tiles and drywall |

© 2022 Pinchin Ltd.

## 4.0 FINDINGS

The following section summarizes the findings of the assessment and provides a general description of the hazardous materials identified and their locations. For details on approximate quantities, condition, friability, accessibility and locations of hazardous materials; refer to the Hazardous Material Summary / Sample Log and All Data Report in Appendices V and VI.

Any quantities listed in this report or data tables are estimated based on visual approximations only and are subject to variation.

### 4.1 Asbestos

#### *4.1.1 Pipe Insulation*

Pipes are either uninsulated or insulated with fibreglass, or other non-asbestos insulation such as mineral fibre or elastomeric foam insulation.

#### *4.1.2 Duct Insulation and Mastic*

Ducts are either uninsulated or insulated with non-asbestos fibreglass (foil-faced or canvas jacketing).

Mastic was not observed.

Non-asbestos fibreglass insulated duct.

#### *4.1.3 Mechanical Equipment Insulation*

Mechanical equipment was not found in the assessed area.

#### *4.1.4 Vermiculite*

Destructive testing was conducted of a masonry block wall, including creating a penetration at one location. The location of destructive testing has been indicated on the drawings in Appendix I.

© 2022 Pinchin Ltd.

Loose fill vermiculite was not observed within the cavities.

### *4.1.5 Acoustic Ceiling Tiles*

Acoustic ceiling tiles are present in the assessed area, as follows:

| Size, Type, Pattern | Locations | Sample Number or Date Code | Asbestos Type |
|---|---|---|---|
| 2'x4', lay-in, smooth | Room JM0-130-0 (Location 348) | S8020A-C | None Detected |
| 2'x4', lay-in, small speckles | Room JM0-130-0 and JM0-119-0 (Locations 329 and 348) | 07/05/2018 | None |

Ceiling tiles presumed to be non-asbestos are based on the date of manufacture determined from the date stamp applied to the top of the tiles. The tiles were manufactured after asbestos stopped being used in acoustic ceiling tiles.

Non-asbestos 2'x4' smooth acoustic ceiling tile.

Non-asbestos 2'x4' acoustic ceiling tile with small speckles.

### *4.1.6 Drywall Joint Compound*

Drywall joint compound present on the ceiling bulkhead in Room JM0-130-0 (Location 348) does not contain asbestos (samples S8025A-C).

### *4.1.7 Firestopping*

Red firestopping sealant present at pipe and conduit penetrations in Room JM0-130-0 (Location 348) does not contain asbestos (samples S8019A-C).

© 2022 Pinchin Ltd.

Non-asbestos red firestopping on pipe penetration.

### *4.1.8 Sealants, Caulking, and Putty*

The following table presents a summary of caulking, sealants and putties present:

| Material, Colour | Application | Sample Locations | Sample Number | Asbestos Type |
|---|---|---|---|---|
| Caulking, off-white | Cabinet and wall seam | Room JM0-130-0 | S8021A-C | None Detected |
| Silicone, white | Tray wash window flashing | Room JM0-130-0 | Not sampled based on non-asbestos silicone composition | None |

Non-asbestos off-white caulking on cabinet and wall seam.

Non-asbestos white silicone caulking on window flashing.

© 2022 Pinchin Ltd.

#### *4.1.9 Other Building Materials*

Beige terrazzo flooring present throughout the assessed area does not contain asbestos (samples S8022A-C).

White paint on concrete block walls throughout the assessed area does not contain asbestos (samples S8023A-C).

White paint present on the concrete columns in Room JM0-130-0 (Location 348) does not contain asbestos (samples S8024A-C).

Non-asbestos white paint present on concrete block walls.

Non-asbestos beige terrazzo flooring.

#### *4.1.10 Excluded Materials*

The following is a list of materials which may contain asbestos and was excluded from the assessment. These materials are presumed to contain asbestos until otherwise proven by sampling and analysis:

- Materials concealed or outside of the assessed area.

### 4.2 Lead

#### *4.2.1 Paints and Surface Coatings*

Refer to the lab report(s) in Appendix II-B and the Hazardous Materials Summary Report in Appendix V for details on paints sampled and their locations.

The following table summarizes the analytical results of paints sampled:

| Sample Number | Colour, Substrate Description | Sample Location | Lead (%) |
|---|---|---|---|
| L0009 | White, concrete block wall | Room JM0-130-0 (Location 348) | 0.0019 |
| L0010 | White, concrete column | Room JM0-130-0 (Location 348) | 0.0009 |

© 2022 Pinchin Ltd.

| Sample Number | Colour, Substrate Description | Sample Location | Lead (%) |
|---|---|---|---|
| **L0011** | **Beige, wood cabinet** | **Room JM0-130-0 (Location 348)** | **0.0815** |
| L0012 | White, drywall bulkhead | Room JM0-130-0 (Location 348) | 0.0013 |

Results less than or equal to 0.1% (1,000 mg/kg), but equal to or greater than 0.009% (90 mg/kg), are considered low-level lead paints or surface coatings in accordance with the EACC guideline.

Paints containing less than 0.009% (90 mg/kg) lead is assumed to be insignificant.

#### *4.2.2 Lead Products and Applications*

Lead products were not found in the assessed area.

#### *4.2.3 Excluded Lead Materials*

Lead is known to be present in a number of materials which were not assessed or sampled. The following materials, where found, should be presumed to contain lead:

- Electrical components, including wiring connectors, grounding conductors, and solder.
- Solder on pipe connections.

### 4.3 Silica

Crystalline silica is known to be a component of the following materials:

- Poured or pre-cast concrete.
- Masonry and mortar.
- Drywall.
- Ceiling tiles.

### 4.4 Mercury

#### *4.4.1 Lamps*

Mercury vapour is present in fluorescent lamp tubes.

#### *4.4.2 Mercury-Containing Devices*

Mercury is present as a liquid in manometers.

© 2022 Pinchin Ltd.

## 4.5 Polychlorinated Biphenyls

### *4.5.1 Caulking and Sealants*

Refer to the Hazardous Materials Summary Report in Appendix V for details on caulking sampled and their locations.

Caulking sampled is considered a non-PCB solid based on the threshold (50 mg/kg).

White silicone caulking is presumed to be a non-PCB solid based on the silicone composition of the caulking.

### *4.5.2 Lighting Ballasts*

Based on information from the Client and confirmed by visual observations (evidence of T-5 or T-8 fixtures) the building has been comprehensively re-lamped and will not contain PCB ballasts.

### *4.5.3 Transformers*

Transformers were not found in the assessed area.

## 4.6 Mould and Water Damage

Visible water damage is present on the beige terrazzo floor in Room JM0-119-0 (Location 329). There is approximately three square feet of visible water damage.

Water damaged terrazzo flooring present in Room JM0-119-0 (Location 329).

© 2022 Pinchin Ltd.

# 5.0 RECOMMENDATIONS

## 5.1 General

1. If suspected hazardous building materials are discovered during the planned work, which are not identified in this report, do not disturb and arrange for further testing and evaluation.
2. Conduct further investigation of the following items, areas or locations, which were not completed during this assessment:
   a. Materials concealed or outside of the assessed area.
3. Provide this report to the contractor prior to bidding or commencing work.
4. Retain a qualified consultant to specify, observe and document the successful removal of hazardous materials.
5. Update the asbestos inventory upon completion of the abatement and removal of asbestos-containing materials and any other relevant findings.

## 5.2 Building Renovation Work

The following recommendations are made regarding renovation involving the hazardous materials identified:

### *5.2.1 Lead*

For paints identified as having low levels of lead (i.e., less than the EACC guideline of 0.1% (1,000 mg/kg) for lead-containing paints but equal to or above 0.009% (90 mg/kg)) special precautions are not recommended unless aggressive disturbance (grinding, blasting, torching) is planned.

Exposure from construction disturbance of paints containing lead less than 0.009% (90 mg/kg) is assumed to be insignificant.

### *5.2.2 Silica*

Construction disturbance of silica-containing products may result in excessive exposures to airborne silica, especially if performed indoors and dry. Cutting, grinding, drilling or demolition of materials containing silica should be completed only with proper respiratory protection and other worker safety precautions that comply with per applicable regulations and guidelines.

© 2022 Pinchin Ltd.

#### *5.2.3 Mercury*

Do not break lamps or separate liquid mercury from components. Recycle and reclaim mercury from fluorescent lamps and manometers when taken out of service. Mercury is classified as a hazardous waste and must be disposed of in accordance with applicable regulations.

#### *5.2.4 Mould*

Water damage was noted in areas affected by the planned work. If mould growth is found during renovation work, use appropriate precautions and protect workers during removal, using methods that comply with provincial guidelines.

## 6.0 TERMS AND LIMITATIONS

This work was performed subject to the Terms and Limitations presented or referenced in the proposal for this project.

Information provided by Pinchin is intended for Client use only. Pinchin will not provide results or information to any party unless disclosure by Pinchin is required by law. Any use by a third party of reports or documents authored by Pinchin or any reliance by a third party on or decisions made by a third party based on the findings described in said documents, is the sole responsibility of such third parties. Pinchin accepts no responsibility for damages suffered by any third party as a result of decisions made or actions conducted. No other warranties are implied or expressed.

## 7.0 REFERENCES

The following legislation and documents were referenced in completing the assessment and this report:

1. Asbestos on Construction Projects and in Buildings and Repair Operations, Ontario Regulation 278/05.
2. Designated Substances, Ontario Regulation 490/09.
3. Lead on Construction Projects, Ministry of Labour Guidance Document.
4. The Environmental Abatement Council of Canada (EACC) Lead Guideline for Construction, Renovation, Maintenance or Repair.
5. Ministry of the Environment Regulation, R.R.O. 1990 Reg. 347 as amended.
6. Ministry of the Environment Regulation, R.R.O. 1990 Reg. 362 as amended.
7. Silica on Construction Projects, Ministry of Labour Guidance Document.

© 2022 Pinchin Ltd.

8. Alert – Mould in Workplace Buildings, Ontario Ministry of Labour.
9. PCB Regulations, SOR/2008-273, Canadian Environmental Protection Act.
10. Surface Coating Materials Regulations, SOR/2016-193, Canada Consumer Product Safety Act.

\\pinchin.com\kgn\Job\287000s\0287280.000 3S0Support,KGH&HDHSites,KGN,HAZ,Reasm\0287280.011 HDH,JM0,AccUpdtSAI,166BrockStKGN,HAZ,DSR\Deliverables\287280.011 HBMA JM0 166BrockStKingstonON KHSC.docx

Template: Master Report for Hazardous Materials Assessment (Pre-Construction), HAZ, July 29, 2021

© 2022 Pinchin Ltd.

# APPENDIX I

## Drawing

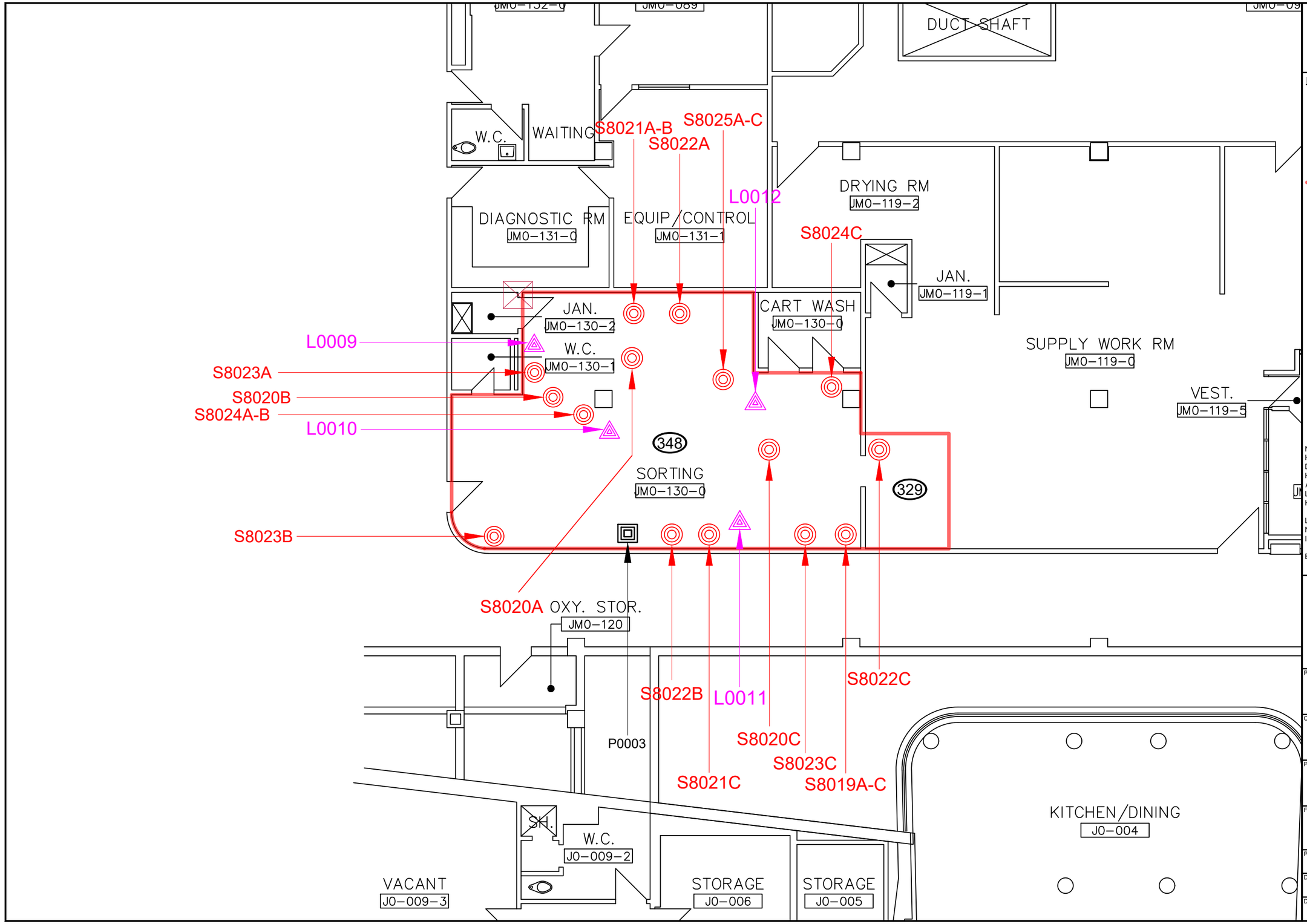


N

LEGEND

- ASBESTOS BULK SAMPLE
- LEAD BULK SAMPLE
- PCB BULK SAMPLE
- INTRUSIVE INSPECTION
- ASSESSED AREA
- PINCHIN LOCATION NUMBER

NOT ALL KNOWN OR SUSPECTED HAZARDOUS BUILDING MATERIALS MAY BE DEPICTED ON THE DRAWING. REFER TO THE HAZARDOUS BUILDING MATERIALS ASSESSMENT REPORT FOR A COMPLETE LIST OF KNOWN AND SUSPECTED HAZARDOUS BUILDING MATERIALS.

LEGEND IS COLOUR DEPENDENT. NON-COLOUR COPIES MAY ALTER INTERPRETATION.

BASE PLAN PROVIDED BY CLIENT.

PINCHIN

| | |
|---|---|
| PROJECT NAME: HAZARDOUS BUILDING MATERIALS ASSESSMENT | |
| CLIENT NAME: KINGSTON HEALTH SCIENCES CENTRE | |
| PROJECT LOCATION: JEANNE MANCE BUILDING 166 BROCK STREET KINGSTON, ONTARIO | |
| FIGURE NAME: LEVEL 0 FLOOR PLAN | |
| PROJECT NUMBER: 287280.011 | SCALE: NOT TO SCALE |
| DRAWN BY: KV | REVIEWED BY: SY |
| DATE: FEBRUARY 2022 | FIGURE NUMBER: 1 OF 1 |

# APPENDIX II-A

## Asbestos Analytical Certificates

Your Project #: 287280.011
Site Location: `
Your C.O.C. #: n/a

**Attention: Kingston Admin**

Pinchin Ltd
1456 Centennial Drive
Suite 2
Kingston, ON
CANADA K7P 0K4

**Report Date: 2022/01/28**
Report #: R6981029
Version: 1 - Final

# CERTIFICATE OF ANALYSIS

**BV LABS JOB #: C215402**
**Received: 2022/01/20, 09:11**

Sample Matrix: Solid
# Samples Received: 21

| Analyses | Quantity | Date Extracted | Date Analyzed | Laboratory Method | Analytical Method |
|---|---|---|---|---|---|
| Asbestos by PLM - 0.5 RDL (1) | 21 | N/A | 2022/01/27 | COR3SOP-00002 | EPA 600R-93/116 |

**Remarks:**

Bureau Veritas is accredited to ISO/IEC 17025 for specific parameters on scopes of accreditation. Unless otherwise noted, procedures used by Bureau Veritas are based upon recognized Provincial, Federal or US method compendia such as CCME, MELCC, EPA, APHA.

All work recorded herein has been done in accordance with procedures and practices ordinarily exercised by professionals in Bureau Veritas' profession using accepted testing methodologies, quality assurance and quality control procedures (except where otherwise agreed by the client and Bureau Veritas in writing). All data is in statistical control and has met quality control and method performance criteria unless otherwise noted. All method blanks are reported; unless indicated otherwise, associated sample data are not blank corrected. Where applicable, unless otherwise noted, Measurement Uncertainty has not been accounted for when stating conformity to the referenced standard.

Bureau Veritas liability is limited to the actual cost of the requested analyses, unless otherwise agreed in writing. There is no other warranty expressed or implied. Bureau Veritas has been retained to provide analysis of samples provided by the Client using the testing methodology referenced in this report. Interpretation and use of test results are the sole responsibility of the Client and are not within the scope of services provided by Bureau Veritas, unless otherwise agreed in writing. Bureau Veritas is not responsible for the accuracy or any data impacts, that result from the information provided by the customer or their agent.

Solid sample results, except biota, are based on dry weight unless otherwise indicated. Organic analyses are not recovery corrected except for isotope dilution methods.
Results relate to samples tested. When sampling is not conducted by Bureau Veritas, results relate to the supplied samples tested.
This Certificate shall not be reproduced except in full, without the written approval of the laboratory.

Bureau Veritas Laboratories' Asbestos Laboratory is accredited by NVLAP for bulk asbestos analysis by polarized light microscopy, NVLAP Code 600136-0.

This report may not be reproduced, except in full, without the written approval of Bureau Veritas Canada. This report may not be used by the client to claim product certification, approval, or endorsement by NVLAP, NIST or any other agency of the U.S. Government.

Bureau Veritas Laboratories' scope of accreditation includes EPA-600/M4-82-020: "Interim Method for the Determination of Asbestos in Bulk Insulation Samples" and EPA-600/R-93/116: "Method for the Determination of Asbestos in Bulk Building Materials".
Reference Method suffix “m” indicates test methods incorporate validated modifications from specific reference methods to improve performance.
* RPDs calculated using raw data. The rounding of final results may result in the apparent difference.
(1) P.O.B. - Percent of Bulk



Bureau Veritas Laboratories 6740 Campobello Road, Mississauga, Ontario, L5N 2L8 Tel: (905) 817-5700 Toll-Free: 800-563-6266 Fax: (905) 817-5777 www.bvlabs.com

Microbiology testing is conducted at 6660 Campobello Rd. Chemistry testing is conducted at 6740 Campobello Rd.

Your Project #: 287280.011
Site Location: `
Your C.O.C. #: n/a

**Attention: Kingston Admin**

Pinchin Ltd
1456 Centennial Drive
Suite 2
Kingston, ON
CANADA K7P 0K4

**Report Date: 2022/01/28**
Report #: R6981029
Version: 1 - Final

# CERTIFICATE OF ANALYSIS

**BV LABS JOB #: C215402**
**Received: 2022/01/20, 09:11**

When Asbestos data is reported with other data, this report contains data that are not covered by the NVLAP accreditation.

Encryption Key

AUTHORIZED REPORT
RAPPORT AUTORISÉ

Bureau Veritas
28 Jan 2022 15:20:03

Please direct all questions regarding this Certificate of Analysis to your Project Manager.
Antonella Brasil, Senior Project Manager
Email: Antonella.Brasil@bureauveritas.com
Phone# (905)817-5817

==========

This report has been generated and distributed using a secure automated process.
BV Labs has procedures in place to guard against improper use of the electronic signature and have the required "signatories", as per ISO/IEC 17025, signing the reports. For Service Group specific validation please refer to the Validation Signature Page.



Bureau Veritas Laboratories 6740 Campobello Road, Mississauga, Ontario, L5N 2L8 Tel: (905) 817-5700 Toll-Free: 800-563-6266 Fax: (905) 817-5777 www.bvlabs.com

Microbiology testing is conducted at 6660 Campobello Rd. Chemistry testing is conducted at 6740 Campobello Rd.

Bureau Veritas Job #: C215402
Report Date: 2022/01/28

Pinchin Ltd
Client Project #: 287280.011
Site Location: `
Sampler Initials: KV

## Asbestos Analytical Results

EPA/600R-93/116 by Polarized Light Microscopy

**S 8019 A FLOOR, FIRESTOPPING (MASTIC), RED, PIPE PENETRATION, LOC:348, SORTING ROOM**

Bureau Veritas ID: RQT238 — Date Analyzed: 2022/01/27

| | P.O.B | Sample Morphology | Asbestos | Other Fibres | Particulate |
|---|---|---|---|---|---|
| Layer 1 | 100 | Homogeneous red firestop | Not Detected | | Non-Fibrous |

**S 8019 B FLOOR, FIRESTOPPING (MASTIC), RED, PIPE PENETRATION, LOC:348, SORTING ROOM**

Bureau Veritas ID: RQT239 — Date Analyzed: 2022/01/27

| | P.O.B | Sample Morphology | Asbestos | Other Fibres | Particulate |
|---|---|---|---|---|---|
| Layer 1 | 100 | Homogeneous red firestop | Not Detected | | Non-Fibrous |

**S 8019 C FLOOR, FIRESTOPPING (MASTIC), RED, PIPE PENETRATION, LOC:348, SORTING ROOM**

Bureau Veritas ID: RQT240 — Date Analyzed: 2022/01/27

| | P.O.B | Sample Morphology | Asbestos | Other Fibres | Particulate |
|---|---|---|---|---|---|
| Layer 1 | 100 | Homogeneous red firestop | Not Detected | | Non-Fibrous |

The limit of quantitation is 0.50%, although asbestos may be qualitatively detected at concentrations less than 0.50%. Samples for which asbestos is detected at <0.50% are reported as trace, “<0.50%”. “Not Detected” indicates that no asbestos fibres were observed.

Calibrated Visual Estimate (%)
Date Format : yyyy/mm/dd

Bureau Veritas Job #: C215402
Report Date: 2022/01/28

Pinchin Ltd
Client Project #: 287280.011
Site Location: `
Sampler Initials: KV

## Asbestos Analytical Results

EPA/600R-93/116 by Polarized Light Microscopy

**S 8020 A CEILING, CEILING TILES (LAY-IN), 2X4 SMOOTH, LOC:348, SORTING ROOM**

Bureau Veritas ID: RQT241 — Date Analyzed: 2022/01/27

| | P.O.B | Sample Morphology | Asbestos | Other Fibres | | Particulate |
|---|---|---|---|---|---|---|
| Layer 1 | 100 | Homogeneous white ceiling tile | Not Detected | Cellulose | 45% | Non-Fibrous |
| | | | | Fibrous Glass | 35% | |

**S 8020 B CEILING, CEILING TILES (LAY-IN), 2X4 SMOOTH, LOC:348, SORTING ROOM**

Bureau Veritas ID: RQT242 — Date Analyzed: 2022/01/27

| | P.O.B | Sample Morphology | Asbestos | Other Fibres | | Particulate |
|---|---|---|---|---|---|---|
| Layer 1 | 100 | Homogeneous white ceiling tile | Not Detected | Cellulose | 45% | Non-Fibrous |
| | | | | Fibrous Glass | 35% | |

**S 8020 C CEILING, CEILING TILES (LAY-IN), 2X4 SMOOTH, LOC:348, SORTING ROOM**

Bureau Veritas ID: RQT243 — Date Analyzed: 2022/01/27

| | P.O.B | Sample Morphology | Asbestos | Other Fibres | | Particulate |
|---|---|---|---|---|---|---|
| Layer 1 | 100 | Homogeneous white ceiling tile | Not Detected | Cellulose | 45% | Non-Fibrous |
| | | | | Fibrous Glass | 35% | |

The limit of quantitation is 0.50%, although asbestos may be qualitatively detected at concentrations less than 0.50%. Samples for which asbestos is detected at <0.50% are reported as trace, “<0.50%”. “Not Detected” indicates that no asbestos fibres were observed.

Calibrated Visual Estimate (%)
Date Format : yyyy/mm/dd

Bureau Veritas Job #: C215402
Report Date: 2022/01/28

Pinchin Ltd
Client Project #: 287280.011
Site Location: `
Sampler Initials: KV

## Asbestos Analytical Results

EPA/600R-93/116 by Polarized Light Microscopy

**S 8021 A WALL, CAULKING, OFF-WHITE, CABINET, LOC:348, SORTING ROOM**

Bureau Veritas ID: RQT244 — Date Analyzed: 2022/01/27

| | P.O.B | Sample Morphology | Asbestos | Other Fibres | Particulate |
|---|---|---|---|---|---|
| Layer 1 | 100 | Homogeneous white caulking | Not Detected | | Non-Fibrous |

**S 8021 B WALL, CAULKING, OFF-WHITE, CABINET, LOC:348, SORTING ROOM**

Bureau Veritas ID: RQT245 — Date Analyzed: 2022/01/27

| | P.O.B | Sample Morphology | Asbestos | Other Fibres | Particulate |
|---|---|---|---|---|---|
| Layer 1 | 100 | Homogeneous white caulking | Not Detected | | Non-Fibrous |

**S 8021 C WALL, CAULKING, OFF-WHITE, CABINET, LOC:348, SORTING ROOM**

Bureau Veritas ID: RQT246 — Date Analyzed: 2022/01/27

| | P.O.B | Sample Morphology | Asbestos | Other Fibres | Particulate |
|---|---|---|---|---|---|
| Layer 1 | 100 | Homogeneous white caulking | Not Detected | | Non-Fibrous |

The limit of quantitation is 0.50%, although asbestos may be qualitatively detected at concentrations less than 0.50%. Samples for which asbestos is detected at <0.50% are reported as trace, “<0.50%”. “Not Detected” indicates that no asbestos fibres were observed.

Calibrated Visual Estimate (%)
Date Format : yyyy/mm/dd

Bureau Veritas Job #: C215402
Report Date: 2022/01/28

Pinchin Ltd
Client Project #: 287280.011
Site Location: `
Sampler Initials: KV

## Asbestos Analytical Results

EPA/600R-93/116 by Polarized Light Microscopy

**S 8022 A FLOOR, TERRAZZO, BEIGE, LOC:348, SORTING ROOM**

Bureau Veritas ID: RQT247 — Date Analyzed: 2022/01/27

| | P.O.B | Sample Morphology | Asbestos | Other Fibres | Particulate |
|---|---|---|---|---|---|
| Layer 1 | 100 | Homogeneous white terrazzo | Not Detected | | Non-Fibrous |

**S 8022 B FLOOR, TERRAZZO, BEIGE, LOC:348, SORTING ROOM**

Bureau Veritas ID: RQT248 — Date Analyzed: 2022/01/27

| | P.O.B | Sample Morphology | Asbestos | Other Fibres | Particulate |
|---|---|---|---|---|---|
| Layer 1 | 100 | Homogeneous white terrazzo | Not Detected | | Non-Fibrous |

**S 8022 C FLOOR, TERRAZZO, BEIGE, LOC:329, SUPPLY/WORKROOM**

Bureau Veritas ID: RQT249 — Date Analyzed: 2022/01/27

| | P.O.B | Sample Morphology | Asbestos | Other Fibres | Particulate |
|---|---|---|---|---|---|
| Layer 1 | 100 | Homogeneous white terrazzo | Not Detected | | Non-Fibrous |

The limit of quantitation is 0.50%, although asbestos may be qualitatively detected at concentrations less than 0.50%. Samples for which asbestos is detected at <0.50% are reported as trace, “<0.50%”. “Not Detected” indicates that no asbestos fibres were observed.

Calibrated Visual Estimate (%)
Date Format : yyyy/mm/dd

Bureau Veritas Job #: C215402
Report Date: 2022/01/28

Pinchin Ltd
Client Project #: 287280.011
Site Location: `
Sampler Initials: KV

## Asbestos Analytical Results

EPA/600R-93/116 by Polarized Light Microscopy

**S 8023 A WALL, CONCRETE (PRECAST), WHITE, LOC:348, SORTING ROOM**

Bureau Veritas ID: RQT250 — Date Analyzed: 2022/01/27

| | P.O.B | Sample Morphology | Asbestos | Other Fibres | Particulate |
|---|---|---|---|---|---|
| Layer 1 | 100 | Homogeneous grey concrete | Not Detected | | Non-Fibrous |

**S 8023 B WALL, CONCRETE (PRECAST), WHITE, LOC:348, SORTING ROOM**

Bureau Veritas ID: RQT251 — Date Analyzed: 2022/01/27

| | P.O.B | Sample Morphology | Asbestos | Other Fibres | Particulate |
|---|---|---|---|---|---|
| Layer 1 | 100 | Homogeneous grey concrete | Not Detected | | Non-Fibrous |

**S 8023 C WALL, CONCRETE (PRECAST), WHITE, LOC:348, SORTING ROOM**

Bureau Veritas ID: RQT252 — Date Analyzed: 2022/01/27

| | P.O.B | Sample Morphology | Asbestos | Other Fibres | Particulate |
|---|---|---|---|---|---|
| Layer 1 | 100 | Homogeneous grey concrete | Not Detected | | Non-Fibrous |

The limit of quantitation is 0.50%, although asbestos may be qualitatively detected at concentrations less than 0.50%. Samples for which asbestos is detected at <0.50% are reported as trace, “<0.50%”. “Not Detected” indicates that no asbestos fibres were observed.

Calibrated Visual Estimate (%)
Date Format : yyyy/mm/dd

Bureau Veritas Job #: C215402
Report Date: 2022/01/28

Pinchin Ltd
Client Project #: 287280.011
Site Location: `
Sampler Initials: KV

## Asbestos Analytical Results

EPA/600R-93/116 by Polarized Light Microscopy

**S 8024 A STRUCTURE, PAINT, WHITE, LOC:348, SORTING ROOM**

Bureau Veritas ID: RQT253 — Date Analyzed: 2022/01/27

| | P.O.B | Sample Morphology | Asbestos | Other Fibres | Particulate |
|---|---|---|---|---|---|
| Layer 1 | 100 | Non-homogeneous white paint/cementitious compound | Not Detected | | Non-Fibrous |

**S 8024 B STRUCTURE, PAINT, WHITE, LOC:348, SORTING ROOM**

Bureau Veritas ID: RQT254 — Date Analyzed: 2022/01/27

| | P.O.B | Sample Morphology | Asbestos | Other Fibres | Particulate |
|---|---|---|---|---|---|
| Layer 1 | 100 | Non-homogeneous white paint/cementitious compound | Not Detected | | Non-Fibrous |

**S 8024 C STRUCTURE, PAINT, WHITE, LOC:348, SORTING ROOM**

Bureau Veritas ID: RQT255 — Date Analyzed: 2022/01/27

| | P.O.B | Sample Morphology | Asbestos | Other Fibres | Particulate |
|---|---|---|---|---|---|
| Layer 1 | 100 | Non-homogeneous white paint/cementitious compound | Not Detected | | Non-Fibrous |

The limit of quantitation is 0.50%, although asbestos may be qualitatively detected at concentrations less than 0.50%. Samples for which asbestos is detected at <0.50% are reported as trace, “<0.50%”. “Not Detected” indicates that no asbestos fibres were observed.

Calibrated Visual Estimate (%)
Date Format : yyyy/mm/dd

Bureau Veritas Job #: C215402
Report Date: 2022/01/28

Pinchin Ltd
Client Project #: 287280.011
Site Location: `
Sampler Initials: KV

## Asbestos Analytical Results

EPA/600R-93/116 by Polarized Light Microscopy

**S 8025 A CEILING, DRYWALL AND JOINT COMPOUND, LOC:348, SORTING ROOM**

Bureau Veritas ID: RQT256 — Date Analyzed: 2022/01/27

| | P.O.B | Sample Morphology | Asbestos | Other Fibres | Particulate |
|---|---|---|---|---|---|
| Layer 1 | 100 | Homogeneous white drywall joint compound | Not Detected | | Non-Fibrous |

**S 8025 B CEILING, DRYWALL AND JOINT COMPOUND, LOC:348, SORTING ROOM**

Bureau Veritas ID: RQT257 — Date Analyzed: 2022/01/27

| | P.O.B | Sample Morphology | Asbestos | Other Fibres | Particulate |
|---|---|---|---|---|---|
| Layer 1 | 100 | Homogeneous white drywall joint compound | Not Detected | | Non-Fibrous |

**S 8025 C CEILING, DRYWALL AND JOINT COMPOUND, LOC:348, SORTING ROOM**

Bureau Veritas ID: RQT258 — Date Analyzed: 2022/01/27

| | P.O.B | Sample Morphology | Asbestos | Other Fibres | Particulate |
|---|---|---|---|---|---|
| Layer 1 | 100 | Homogeneous white drywall joint compound | Not Detected | | Non-Fibrous |

The limit of quantitation is 0.50%, although asbestos may be qualitatively detected at concentrations less than 0.50%. Samples for which asbestos is detected at <0.50% are reported as trace, “<0.50%”. “Not Detected” indicates that no asbestos fibres were observed.

Calibrated Visual Estimate (%)
Date Format : yyyy/mm/dd

Bureau Veritas Job #: C215402
Report Date: 2022/01/28

Pinchin Ltd
Client Project #: 287280.011
Site Location: `
Sampler Initials: KV

# TEST SUMMARY

**Bureau Veritas ID:** RQT238 **Collected:** 2022/01/18
**Sample ID:** S 8019 A FLOOR, FIRESTOPPING (MASTIC), RED, PIPE PENETRATION, LOC:348, SORTING ROOM **Shipped:**
**Matrix:** Solid **Received:** 2022/01/20

| Test Description | Instrumentation | Batch | Extracted | Date Analyzed | Analyst |
|---|---|---|---|---|---|
| Asbestos by PLM - 0.5 RDL | MIC | 7802833 | N/A | 2022/01/27 | Armish Khalid |

**Bureau Veritas ID:** RQT239 **Collected:** 2022/01/18
**Sample ID:** S 8019 B FLOOR, FIRESTOPPING (MASTIC), RED, PIPE PENETRATION, LOC:348, SORTING ROOM **Shipped:**
**Matrix:** Solid **Received:** 2022/01/20

| Test Description | Instrumentation | Batch | Extracted | Date Analyzed | Analyst |
|---|---|---|---|---|---|
| Asbestos by PLM - 0.5 RDL | MIC | 7802833 | N/A | 2022/01/27 | Armish Khalid |

**Bureau Veritas ID:** RQT239 Dup **Collected:** 2022/01/18
**Sample ID:** S 8019 B FLOOR, FIRESTOPPING (MASTIC), RED, PIPE PENETRATION, LOC:348, SORTING ROOM **Shipped:**
**Matrix:** Solid **Received:** 2022/01/20

| Test Description | Instrumentation | Batch | Extracted | Date Analyzed | Analyst |
|---|---|---|---|---|---|
| Asbestos by PLM - 0.5 RDL | MIC | 7802833 | N/A | 2022/01/27 | Armish Khalid |

**Bureau Veritas ID:** RQT240 **Collected:** 2022/01/18
**Sample ID:** S 8019 C FLOOR, FIRESTOPPING (MASTIC), RED, PIPE PENETRATION, LOC:348, SORTING ROOM **Shipped:**
**Matrix:** Solid **Received:** 2022/01/20

| Test Description | Instrumentation | Batch | Extracted | Date Analyzed | Analyst |
|---|---|---|---|---|---|
| Asbestos by PLM - 0.5 RDL | MIC | 7802833 | N/A | 2022/01/27 | Armish Khalid |

**Bureau Veritas ID:** RQT241 **Collected:** 2022/01/18
**Sample ID:** S 8020 A CEILING, CEILING TILES (LAY-IN), 2X4 SMOOTH, LOC:348, SORTING ROOM **Shipped:**
**Matrix:** Solid **Received:** 2022/01/20

| Test Description | Instrumentation | Batch | Extracted | Date Analyzed | Analyst |
|---|---|---|---|---|---|
| Asbestos by PLM - 0.5 RDL | MIC | 7802833 | N/A | 2022/01/27 | Armish Khalid |

**Bureau Veritas ID:** RQT242 **Collected:** 2022/01/18
**Sample ID:** S 8020 B CEILING, CEILING TILES (LAY-IN), 2X4 SMOOTH, LOC:348, SORTING ROOM **Shipped:**
**Matrix:** Solid **Received:** 2022/01/20

| Test Description | Instrumentation | Batch | Extracted | Date Analyzed | Analyst |
|---|---|---|---|---|---|
| Asbestos by PLM - 0.5 RDL | MIC | 7802833 | N/A | 2022/01/27 | Armish Khalid |

**Bureau Veritas ID:** RQT243 **Collected:** 2022/01/18
**Sample ID:** S 8020 C CEILING, CEILING TILES (LAY-IN), 2X4 SMOOTH, LOC:348, SORTING ROOM **Shipped:**
**Matrix:** Solid **Received:** 2022/01/20

| Test Description | Instrumentation | Batch | Extracted | Date Analyzed | Analyst |
|---|---|---|---|---|---|
| Asbestos by PLM - 0.5 RDL | MIC | 7802833 | N/A | 2022/01/27 | Armish Khalid |



Bureau Veritas Laboratories 6740 Campobello Road, Mississauga, Ontario, L5N 2L8 Tel: (905) 817-5700 Toll-Free: 800-563-6266 Fax: (905) 817-5777 www.bvlabs.com

Microbiology testing is conducted at 6660 Campobello Rd. Chemistry testing is conducted at 6740 Campobello Rd.

Bureau Veritas Job #: C215402
Report Date: 2022/01/28

Pinchin Ltd
Client Project #: 287280.011
Site Location: `
Sampler Initials: KV

# TEST SUMMARY

**Bureau Veritas ID:** RQT244 **Collected:** 2022/01/18
**Sample ID:** S 8021 A WALL, CAULKING, OFF-WHITE, CABINET, LOC:348, SORTING ROOM **Shipped:**
**Matrix:** Solid **Received:** 2022/01/20

| Test Description | Instrumentation | Batch | Extracted | Date Analyzed | Analyst |
|---|---|---|---|---|---|
| Asbestos by PLM - 0.5 RDL | MIC | 7802833 | N/A | 2022/01/27 | Armish Khalid |

**Bureau Veritas ID:** RQT245 **Collected:** 2022/01/18
**Sample ID:** S 8021 B WALL, CAULKING, OFF-WHITE, CABINET, LOC:348, SORTING ROOM **Shipped:**
**Matrix:** Solid **Received:** 2022/01/20

| Test Description | Instrumentation | Batch | Extracted | Date Analyzed | Analyst |
|---|---|---|---|---|---|
| Asbestos by PLM - 0.5 RDL | MIC | 7802833 | N/A | 2022/01/27 | Armish Khalid |

**Bureau Veritas ID:** RQT246 **Collected:** 2022/01/18
**Sample ID:** S 8021 C WALL, CAULKING, OFF-WHITE, CABINET, LOC:348, SORTING ROOM **Shipped:**
**Matrix:** Solid **Received:** 2022/01/20

| Test Description | Instrumentation | Batch | Extracted | Date Analyzed | Analyst |
|---|---|---|---|---|---|
| Asbestos by PLM - 0.5 RDL | MIC | 7802833 | N/A | 2022/01/27 | Armish Khalid |

**Bureau Veritas ID:** RQT247 **Collected:** 2022/01/18
**Sample ID:** S 8022 A FLOOR, TERRAZZO, BEIGE, LOC:348, SORTING ROOM **Shipped:**
**Matrix:** Solid **Received:** 2022/01/20

| Test Description | Instrumentation | Batch | Extracted | Date Analyzed | Analyst |
|---|---|---|---|---|---|
| Asbestos by PLM - 0.5 RDL | MIC | 7802833 | N/A | 2022/01/27 | Armish Khalid |

**Bureau Veritas ID:** RQT248 **Collected:** 2022/01/18
**Sample ID:** S 8022 B FLOOR, TERRAZZO, BEIGE, LOC:348, SORTING ROOM **Shipped:**
**Matrix:** Solid **Received:** 2022/01/20

| Test Description | Instrumentation | Batch | Extracted | Date Analyzed | Analyst |
|---|---|---|---|---|---|
| Asbestos by PLM - 0.5 RDL | MIC | 7802833 | N/A | 2022/01/27 | Armish Khalid |

**Bureau Veritas ID:** RQT249 **Collected:** 2022/01/18
**Sample ID:** S 8022 C FLOOR, TERRAZZO, BEIGE, LOC:329, SUPPLY/WORKROOM **Shipped:**
**Matrix:** Solid **Received:** 2022/01/20

| Test Description | Instrumentation | Batch | Extracted | Date Analyzed | Analyst |
|---|---|---|---|---|---|
| Asbestos by PLM - 0.5 RDL | MIC | 7802833 | N/A | 2022/01/27 | Armish Khalid |

**Bureau Veritas ID:** RQT249 Dup **Collected:** 2022/01/18
**Sample ID:** S 8022 C FLOOR, TERRAZZO, BEIGE, LOC:329, SUPPLY/WORKROOM **Shipped:**
**Matrix:** Solid **Received:** 2022/01/20

| Test Description | Instrumentation | Batch | Extracted | Date Analyzed | Analyst |
|---|---|---|---|---|---|
| Asbestos by PLM - 0.5 RDL | MIC | 7802833 | N/A | 2022/01/27 | Armish Khalid |



Bureau Veritas Laboratories 6740 Campobello Road, Mississauga, Ontario, L5N 2L8 Tel: (905) 817-5700 Toll-Free: 800-563-6266 Fax: (905) 817-5777 www.bvlabs.com

Microbiology testing is conducted at 6660 Campobello Rd. Chemistry testing is conducted at 6740 Campobello Rd.

Bureau Veritas Job #: C215402
Report Date: 2022/01/28

Pinchin Ltd
Client Project #: 287280.011
Site Location: `
Sampler Initials: KV

## TEST SUMMARY

**Bureau Veritas ID:** RQT250 **Collected:** 2022/01/18
**Sample ID:** S 8023 A WALL, CONCRETE (PRECAST), WHITE, LOC:348, SORTING ROOM **Shipped:**
**Matrix:** Solid **Received:** 2022/01/20

| Test Description | Instrumentation | Batch | Extracted | Date Analyzed | Analyst |
|---|---|---|---|---|---|
| Asbestos by PLM - 0.5 RDL | MIC | 7802833 | N/A | 2022/01/27 | Armish Khalid |

**Bureau Veritas ID:** RQT251 **Collected:** 2022/01/18
**Sample ID:** S 8023 B WALL, CONCRETE (PRECAST), WHITE, LOC:348, SORTING ROOM **Shipped:**
**Matrix:** Solid **Received:** 2022/01/20

| Test Description | Instrumentation | Batch | Extracted | Date Analyzed | Analyst |
|---|---|---|---|---|---|
| Asbestos by PLM - 0.5 RDL | MIC | 7802833 | N/A | 2022/01/27 | Armish Khalid |

**Bureau Veritas ID:** RQT252 **Collected:** 2022/01/18
**Sample ID:** S 8023 C WALL, CONCRETE (PRECAST), WHITE, LOC:348, SORTING ROOM **Shipped:**
**Matrix:** Solid **Received:** 2022/01/20

| Test Description | Instrumentation | Batch | Extracted | Date Analyzed | Analyst |
|---|---|---|---|---|---|
| Asbestos by PLM - 0.5 RDL | MIC | 7802833 | N/A | 2022/01/27 | Armish Khalid |

**Bureau Veritas ID:** RQT253 **Collected:** 2022/01/18
**Sample ID:** S 8024 A STRUCTURE, PAINT, WHITE, LOC:348, SORTING ROOM **Shipped:**
**Matrix:** Solid **Received:** 2022/01/20

| Test Description | Instrumentation | Batch | Extracted | Date Analyzed | Analyst |
|---|---|---|---|---|---|
| Asbestos by PLM - 0.5 RDL | MIC | 7802833 | N/A | 2022/01/27 | Armish Khalid |

**Bureau Veritas ID:** RQT254 **Collected:** 2022/01/18
**Sample ID:** S 8024 B STRUCTURE, PAINT, WHITE, LOC:348, SORTING ROOM **Shipped:**
**Matrix:** Solid **Received:** 2022/01/20

| Test Description | Instrumentation | Batch | Extracted | Date Analyzed | Analyst |
|---|---|---|---|---|---|
| Asbestos by PLM - 0.5 RDL | MIC | 7802833 | N/A | 2022/01/27 | Armish Khalid |

**Bureau Veritas ID:** RQT255 **Collected:** 2022/01/18
**Sample ID:** S 8024 C STRUCTURE, PAINT, WHITE, LOC:348, SORTING ROOM **Shipped:**
**Matrix:** Solid **Received:** 2022/01/20

| Test Description | Instrumentation | Batch | Extracted | Date Analyzed | Analyst |
|---|---|---|---|---|---|
| Asbestos by PLM - 0.5 RDL | MIC | 7802833 | N/A | 2022/01/27 | Armish Khalid |

**Bureau Veritas ID:** RQT256 **Collected:** 2022/01/18
**Sample ID:** S 8025 A CEILING, DRYWALL AND JOINT COMPOUND, LOC:348, SORTING ROOM **Shipped:**
**Matrix:** Solid **Received:** 2022/01/20

| Test Description | Instrumentation | Batch | Extracted | Date Analyzed | Analyst |
|---|---|---|---|---|---|
| Asbestos by PLM - 0.5 RDL | MIC | 7802833 | N/A | 2022/01/27 | Armish Khalid |



Bureau Veritas Laboratories 6740 Campobello Road, Mississauga, Ontario, L5N 2L8 Tel: (905) 817-5700 Toll-Free: 800-563-6266 Fax: (905) 817-5777 www.bvlabs.com

Microbiology testing is conducted at 6660 Campobello Rd. Chemistry testing is conducted at 6740 Campobello Rd.

Bureau Veritas Job #: C215402
Report Date: 2022/01/28

Pinchin Ltd
Client Project #: 287280.011
Site Location: `
Sampler Initials: KV

## TEST SUMMARY

**Bureau Veritas ID:** RQT257
**Sample ID:** S 8025 B CEILING, DRYWALL AND JOINT COMPOUND, LOC:348, SORTING ROOM
**Matrix:** Solid

**Collected:** 2022/01/18
**Shipped:**
**Received:** 2022/01/20

| Test Description | Instrumentation | Batch | Extracted | Date Analyzed | Analyst |
|---|---|---|---|---|---|
| Asbestos by PLM - 0.5 RDL | MIC | 7802833 | N/A | 2022/01/27 | Armish Khalid |

**Bureau Veritas ID:** RQT258
**Sample ID:** S 8025 C CEILING, DRYWALL AND JOINT COMPOUND, LOC:348, SORTING ROOM
**Matrix:** Solid

**Collected:** 2022/01/18
**Shipped:**
**Received:** 2022/01/20

| Test Description | Instrumentation | Batch | Extracted | Date Analyzed | Analyst |
|---|---|---|---|---|---|
| Asbestos by PLM - 0.5 RDL | MIC | 7802833 | N/A | 2022/01/27 | Armish Khalid |



Bureau Veritas Laboratories 6740 Campobello Road, Mississauga, Ontario, L5N 2L8 Tel: (905) 817-5700 Toll-Free: 800-563-6266 Fax: (905) 817-5777 www.bvlabs.com

Microbiology testing is conducted at 6660 Campobello Rd. Chemistry testing is conducted at 6740 Campobello Rd.

## GENERAL COMMENTS

**Results relate only to the items tested.**



Bureau Veritas Laboratories 6740 Campobello Road, Mississauga, Ontario, L5N 2L8 Tel: (905) 817-5700 Toll-Free: 800-563-6266 Fax: (905) 817-5777 www.bvlabs.com

Microbiology testing is conducted at 6660 Campobello Rd. Chemistry testing is conducted at 6740 Campobello Rd.

Bureau Veritas Job #: C215402
Report Date: 2022/01/28

Pinchin Ltd
Client Project #: 287280.011
Site Location: `
Sampler Initials: KV

## VALIDATION SIGNATURE PAGE

The analytical data and all QC contained in this report were reviewed and validated by:

Jon Delos Santos, Laboratory Supervisor

BV Labs has procedures in place to guard against improper use of the electronic signature and have the required "signatories", as per ISO/IEC 17025, signing the reports.
For Service Group specific validation please refer to the Validation Signature Page.



Bureau Veritas Laboratories 6740 Campobello Road, Mississauga, Ontario, L5N 2L8 Tel: (905) 817-5700 Toll-Free: 800-563-6266 Fax: (905) 817-5777 www.bvlabs.com

Microbiology testing is conducted at 6660 Campobello Rd. Chemistry testing is conducted at 6740 Campobello Rd.

# APPENDIX II-B

## Lead Analytical Certificates

PARACEL LABORATORIES LTD.

TRUSTED.
RESPONSIVE.
RELIABLE.

300 - 2319 St. Laurent Blvd
Ottawa, ON, K1G 4J8
1-800-749-1947
www.paracellabs.com

# Certificate of Analysis

**Pinchin Ltd. (Kingston)**

1456 Centennial Drive, Suite 2
Kingston, ON K7P 0K4
Attn: Kristen Vanderburgt

Client PO:
Project: 287280.011
Custody:

Report Date: 21-Jan-2022
Order Date: 19-Jan-2022

**Order #: 2204162**

This Certificate of Analysis contains analytical data applicable to the following samples as submitted:

| Paracel ID | Client ID |
|---|---|
| 2204162-01 | L0009 - White, concrete block wall, Room JM0-130 |
| 2204162-02 | L0010 - White, concrete column, Room JM0-130 |
| 2204162-03 | L0011 - Beige, wood cabinet, Room JM0-130 |
| 2204162-04 | L0012 - White, drywall bulkhead, Room JM0-130 |

Approved By: Mark Foto

Mark Foto, M.Sc.
Lab Supervisor

Any use of these results implies your agreement that our total liabilty in connection with this work, however arising shall be limited to the amount paid by you for this work, and that our employees or agents shall not under circumstances be liable to you in connection with this work

## Analysis Summary Table

| Analysis | Method Reference/Description | Extraction Date | Analysis Date |
|---|---|---|---|
| Metals, ICP-MS | EPA 6020 - Digestion - ICP-MS | 21-Jan-22 | 21-Jan-22 |

**Qualifier Notes:**

***Sample Qualifiers :***

1 : Complete separation of paint from substrate not possible for this sample and a small amount of substrate has been included in the paint digestion.

***QC Qualifiers :***

QM-07 : The spike recovery was outside acceptance limits for the MS and/or MSD. The batch was accepted based on other acceptable QC.

**Sample Data Revisions**

None

**Work Order Revisions/Comments:**

None

**Other Report Notes:**

n/a: not applicable
ND: Not Detected
MDL: Method Detection Limit
Source Result: Data used as source for matrix and duplicate samples
%REC: Percent recovery.
RPD: Relative percent difference.

## *Sample Results*

### Lead

**Matrix: Paint**

| Paracel ID | Client ID | Sample Date | Units | MDL | Result |
|---|---|---|---|---|---|
| 2204162-01 | L0009 - White, concrete block wall, Room JM0-130 | 13-Jan-22 | % by Wt. | 0.0005 | 0.0019 |
| 2204162-02 | L0010 - White, concrete column, Room JM0-130 | 13-Jan-22 | % by Wt. | 0.0005 | 0.0009 |
| 2204162-03 | L0011 - Beige, wood cabinet, Room JM0-130 | 13-Jan-22 | % by Wt. | 0.0005 | 0.0815 [1] |
| 2204162-04 | L0012 - White, drywall bulkhead, Room JM0-130 | 13-Jan-22 | % by Wt. | 0.0005 | 0.0013 |

## *Laboratory Internal QA/QC*

| Analyte | Result | Reporting Limit | Units | Source Result | %REC | %REC Limit | RPD | RPD Limit | Notes |
|---|---|---|---|---|---|---|---|---|---|
| **Matrix Blank** | | | | | | | | | |
| **Lead** | **ND** | **0.0005** | **% by Wt.** | | | | | | |
| **Matrix Duplicate** | | | | | | | | | |
| **Lead** | **0.104** | **0.0005** | **% by Wt.** | **0.155** | | | **39.70** | **50** | |
| **Matrix Spike** | | | | | | | | | |
| Lead | 81.4 | 5.00 | % by Wt. | 62.2 | 38.5 | 70-130 | | | QM-07 |

PARACEL LABORATORIES LTD. | T R R

**Paracel ID: 2204162**

e
St. Laurent Blvd.
ntario K1G 4J8
49-1947
@paracellabs.com
cellabs.com

OTTAWA · KINGSTON · NIAGARA · MISSISSAUGA · SARNIA

**Chain of Custody**
(Lab Use Only)
10

Page 1 of 1

| | |
|---|---|
| Client Name: Pinchin Ltd. | Project Reference: 287280.011 |
| Contact Name: Kristen Vanderburgt | Quote # Standing Offer |
| Address: 1456 Centennial Drive, Suite 2, Kingston, ON | PO # |
| Telephone: 613.541.1013 ext 1614 | Email Address: kvanderburgt@pinchin.com syoung@pinchin.com |

TAT: ✔ Regular ☐ 3 Day ☐ 2 Day ☐ 1 Day

Date Required: _____

**Criteria:** ☐ O. Reg. 153 (As Amended) Table __ ☐ RSC Filing ☐ O. Reg. 558/00 ☐ PWQO ☐ CCME ☐ SUB (Storm) ☐ SUB (Sanitary) Municipality: _____ ☐ Other: _____

**Matrix Type:** S (Soil/Sed.) GW (Ground Water) SW (Surface Water) SS (Storm/Sanitary Sewer) P (Paint) A (Air) O (Other)

**Paracel Order Number:** 2204162

**Required Analyses**

| | Sample ID/Location Name | Matrix | Air Volume | # of Containers | Sample Taken Date | Sample Taken Time | LEAD | | | | | | | | | | |
|---|---|---|---|---|---|---|---|---|---|---|---|---|---|---|---|---|---|
| 1 | L0009 - White, concrete block wall, Room JM0-130 | P | | 1 | Jan 13, 2022 | 11:00 AM | ✔ | | | | | | | | | | |
| 2 | L0010 - White, concrete column, Room JM0-130 | P | | 1 | Jan 13, 2022 | 11:00 AM | ✔ | | | | | | | | | | |
| 3 | L0011 - Beige, wood cabinet, Room JM0-130 | P | | 1 | Jan 13, 2022 | 11:00 AM | ✔ | | | | | | | | | | |
| 4 | L0012 - White, drywall bulkhead, Room JM0-130 | P | | 1 | Jan 13, 2022 | 11:00 AM | ✔ | | | | | | | | | | |
| 5 | | | | | | | | | | | | | | | | | |
| 6 | | | | | | | | | | | | | | | | | |
| 7 | | | | | | | | | | | | | | | | | |
| 8 | | | | | | | | | | | | | | | | | |
| 9 | | | | | | | | | | | | | | | | | |
| 10 | | | | | | | | | | | | | | | | | |

Comments: Please report in %

Please cc the following on the results: syoung@pinchin.com, kvanderburgt@pinchin.com, kingstonadmin@pinchin.com

Method of Delivery: Purolator

| | | | |
|---|---|---|---|
| Relinquished By (Sign): K. Vanderburgt | Received by Driver/Depot: | Received at Lab: | Verified By: |
| Relinquished By (Print): Kristen Vanderburgt | Date/Time: | Date/Time: Jan 18 2022 | Date/Time: Jan 18 2022 |
| Date/Time: January 17, 2020 - 4:00pm | Temperature: _____ °C | Temperature: _____ °C 9.5 | pH Verified [ ] By: |

# APPENDIX II-C

## PCB Analytical Certificates

PARACEL LABORATORIES LTD.

TRUSTED.
RESPONSIVE.
RELIABLE.

300 - 2319 St. Laurent Blvd
Ottawa, ON, K1G 4J8
1-800-749-1947
www.paracellabs.com

# Certificate of Analysis

**Pinchin Ltd. (Kingston)**

1456 Centennial Drive, Suite 2
Kingston, ON K7P 0K4
Attn: Kristen Vanderburgt

Client PO:
Project: 287280.011
Custody:

Report Date: 20-Jan-2022
Order Date: 19-Jan-2022

**Order #: 2204176**

This Certificate of Analysis contains analytical data applicable to the following samples as submitted:

| Paracel ID | Client ID |
|---|---|
| 2204176-01 | P0003 - Off-while, caulking, cabinet seam, Room JM0-130 |

Approved By: Mark Foto

Mark Foto, M.Sc.
Lab Supervisor

Any use of these results implies your agreement that our total liabilty in connection with this work, however arising, shall be limited to the amount paid by you for this work, and that our employees or agents shall not under any circumstances be liable to you in connection with this work.

Certificate of Analysis

**Client: Pinchin Ltd. (Kingston)**

**Client PO:**

Report Date: 20-Jan-2022

Order Date: 19-Jan-2022

**Project Description: 287280.011**

## Analysis Summary Table

| Analysis | Method Reference/Description | Extraction Date | Analysis Date |
|---|---|---|---|
| PCBs, total | SW846 8082A - GC-ECD | 20-Jan-22 | 20-Jan-22 |

Certificate of Analysis

**Client: Pinchin Ltd. (Kingston)**

**Client PO:**

Report Date: 20-Jan-2022

Order Date: 19-Jan-2022

**Project Description: 287280.011**

| | **Client ID:** | P0003 - Off-while, caulking, cabinet seam, Room JM0-130 | - | - | - |
|---|---|---|---|---|---|
| | **Sample Date:** | 13-Jan-22 11:00 | - | - | - |
| | **Sample ID:** | 2204176-01 | - | - | - |
| | **MDL/Units** | Other | - | - | - |
| **PCBs** | | | | | |
| PCBs, total | 5 ppm | <5 | - | - | - |
| Decachlorobiphenyl | Surrogate | 109% | - | - | - |

## Method Quality Control: Blank

| Analyte | Result | Reporting Limit | Units | Source Result | %REC | %REC Limit | RPD | RPD Limit | Notes |
|---|---|---|---|---|---|---|---|---|---|
| **PCBs** | | | | | | | | | |
| PCBs, total | ND | 5 | ppm | | | | | | |
| *Surrogate: Decachlorobiphenyl* | *5.51* | | *ppm* | | *110* | *60-140* | | | |

## Method Quality Control: Duplicate

| Analyte | Result | Reporting Limit | Units | Source Result | %REC | %REC Limit | RPD | RPD Limit | Notes |
|---|---|---|---|---|---|---|---|---|---|
| **PCBs** | | | | | | | | | |
| PCBs, total | ND | 5 | ppm | ND | | | NC | 40 | |
| *Surrogate: Decachlorobiphenyl* | *4.68* | | *ppm* | | *93.6* | *60-140* | | | |

## Method Quality Control: Spike

| Analyte | Result | Reporting Limit | Units | Source Result | %REC | %REC Limit | RPD | RPD Limit | Notes |
|---|---|---|---|---|---|---|---|---|---|
| **PCBs** | | | | | | | | | |
| PCBs, total | 18 | 5 | ppm | ND | 92.1 | 60-140 | | | |
| *Surrogate: Decachlorobiphenyl* | *5.29* | | *ppm* | | *106* | *60-140* | | | |

**Qualifier Notes:**

None

**Sample Data Revisions**

None

**Work Order Revisions / Comments:**

None

**Other Report Notes:**

n/a: not applicable
ND: Not Detected
MDL: Method Detection Limit
Source Result: Data used as source for matrix and duplicate samples
%REC: Percent recovery.
RPD: Relative percent difference.
NC: Not Calculated

PARACEL LABORATORIES LTD. | TRUST RESP( RELI/

**Paracel ID: 2204176**

nt Blvd.
1G 4J8
llabs.com

OTTAWA · KINGSTON · NIAGARA · MISSISSAUGA · SARNIA

www.paracellabs.com

**Chain of Custody**
(Lab Use Only)
#4

Page 1 of 1

| | |
|---|---|
| Client Name: Pinchin Ltd. | Project Reference: 287280.011 |
| Contact Name: Kristen Vanderburgt | Quote # |
| Address: 1456 Centennial Drive, Suite 2, Kingston, ON | PO # |
| Telephone: 613.541.1013 ext 1614 | Email Address: kvanderburgt@pinchin.com syoung@pinchin.com |

TAT: ✓ Regular ☐ 3 Day ☐ 2 Day ☐ 1 Day

Date Required: _____

Criteria: ☐ O. Reg. 153 (As Amended) Table __ ☐ RSC Filing ☐ O. Reg. 558/00 ☐ PWQO ☐ CCME ☐ SUB (Storm) ☐ SUB (Sanitary) Municipality: _____ ☐ Other: _____

**Matrix Type:** S (Soil/Sed.) GW (Ground Water) SW (Surface Water) SS (Storm/Sanitary Sewer) P (Paint) A (Air) O (Other)

**Paracel Order Number:** 2204176

**Required Analyses**

| | Sample ID/Location Name | Matrix | Air Volume | # of Containers | Sample Taken Date | Sample Taken Time | PCB | | | | | | | | | | |
|---|---|---|---|---|---|---|---|---|---|---|---|---|---|---|---|---|---|
| 1 | P0003 - Off-white, caulking, cabinet seam, Room JM0-130 | O | | 1 | Jan 13, 2022 | 11:00 AM | ✓ | | | | | | | | | | |
| 2 | | | | | | | | | | | | | | | | | |
| 3 | | | | | | | | | | | | | | | | | |
| 4 | | | | | | | | | | | | | | | | | |
| 5 | | | | | | | | | | | | | | | | | |
| 6 | | | | | | | | | | | | | | | | | |
| 7 | | | | | | | | | | | | | | | | | |
| 8 | | | | | | | | | | | | | | | | | |
| 9 | | | | | | | | | | | | | | | | | |
| 10 | | | | | | | | | | | | | | | | | |

Comments: Please report in PPM

Please cc the following on the results: syoung@pinchin.com, kvanderburgt@pinchin.com, kingstonadmin@pinchin.com

Method of Delivery: Paralab

| | | | |
|---|---|---|---|
| Relinquished By (Sign): K.Vanderburgt | Received by Driver/Depot: | Received at Lab: | Verified By: |
| Relinquished By (Print): Kristen Vanderburgt | Date/Time: | Date/Time: Jan 19 2022 | Date/Time: Jan 19 2022 |
| Date/Time: January 17, 2022 - 4:00pm | Temperature: _____ °C | Temperature: _____ °C | pH Verified [ ] By: _____ |

# APPENDIX III

## Methodology

## 1.0 GENERAL

An inspection was conducted to identify the type of Hazardous Building Materials incorporated in the structure and its finishes.

Information regarding the location and condition of hazardous building materials encountered and visually estimated quantities were recorded. The locations of any samples collected were recorded on small-scale plans. As-built drawings and previous reports were referenced where provided.

Sample collection was conducted in accordance with our Standard Operating Procedures.

### 1.1 Asbestos

The inspection for asbestos included friable and non-friable asbestos-containing materials (ACM). A friable material is a material that when dry can be crumbled, pulverized or powdered by hand pressure.

A separate set of samples was collected of each type of homogenous material suspected to contain asbestos. A homogenous material is defined by the US EPA as material that is uniform in texture and appearance, was installed at one time, and is unlikely to consist of more than one type or formulation of material. The homogeneous materials were determined by visual examination and available information on the phases of construction and prior renovations.

Samples were collected at a rate that is in compliance with the requirements of local regulations and guidelines. The sampling strategy was also based on known ban dates and phase out dates of the use of asbestos; sampling of certain building materials is not conducted after specific construction dates. In addition, to be conservative, several years past these dates are added to account for some uncertainty in the exact start / finish date of construction and associated usage of ACM. In some cases, manufactured products such as asbestos cement pipe were visually identified without sample confirmation.

The asbestos analysis was completed using a stop-positive approach. Only one result meeting the regulated criteria was required to determine that a material is asbestos-containing, but all samples must be analyzed to conclusively determine that a material is non-asbestos. The laboratory stopped analyzing samples from a homogeneous material once a result equal to or greater than the regulated criteria is detected in any of the samples of that material. All samples of a homogeneous material were analyzed if no asbestos is detected. In some cases, all samples were analyzed in the sample set regardless of result.

The analysis was performed in accordance with Test Method EPA/600/R-93/116: Method for the Determination of Asbestos in Bulk Building Materials, July 1993.

© 2022 Pinchin Ltd.

Analytical results were compared to the following criteria:

| Jurisdiction | Friable | Non-Friable |
|---|---|---|
| Ontario | 0.5% | 0.5% |

Where building materials are described in the report as “non-asbestos” or “does not contain asbestos”, this means that either no asbestos was detected by the analytical method utilized in any of the multiple samples or, if detected, it is below the lower limit of an asbestos-containing material in the applicable regulation. Additionally, these terms are used for materials which historically are known to not include asbestos in their manufacturing.

## 1.2 Lead

Samples of distinctive paint finishes, and surface coatings present in more than a limited application, where removal of the paint is possible was collected. The samples were collected by scraping the painted finish to include base and covering applications.

Analysis for lead in paints or surface coatings was performed in accordance with EPA Method No. 3050B/Method No. 7420; flame atomic absorption, or equivalent.

Analytical results were compared to the following criteria:

| Jurisdiction | Units (%) | Units (ppm) / (mg/kg) |
|---|---|---|
| Ontario | 0.1 | 1000 |

Other lead building products (e.g. batteries, lead sheeting, flashing) were identified by visual observation only.

## 1.3 Silica

Building materials known to contain crystalline silica (e.g. concrete, cement, tile, brick, masonry, mortar) were identified by visual inspection only. Pinchin did not perform sampling of these materials for laboratory analysis of crystalline silica content.

## 1.4 Mercury

Building materials, products or equipment (e.g. thermostats, barometers, pressure gauges, lamp tubes), suspected to contain mercury was identified by visually inspection only. Dismantling of equipment suspected of containing mercury was not performed. Sampling of these materials for laboratory analysis of mercury content was not performed.

© 2022 Pinchin Ltd.

## 1.5 Polychlorinated Biphenyls

The potential for light ballast and oil filled transformers to contain PCBs was based on the age of the building, a review of maintenance records and examination of labels or nameplates on equipment, where present and accessible. The information was compared to known ban dates of PCBs and Environment Canada publications.

Dry type transformers were presumed to be free of dielectric fluids and hence non-PCB.

Fluids (mineral oil, hydraulic, Aroclor or Askarel) in transformers or other equipment were not sampled for PCB content.

Caulking, sealants, or paints were sampled and submitted for PCB analysis following EPA 3550C/8082A.

Sample results are compared to the criteria of 50 mg/kg for solids as stated in the PCB Regulation, SOR/2008-273.

## 1.6 Visible Mould

The presence of mould or water damage was determined by visual inspection of exposed building surfaces. If any mould growth or water damage was concealed within building cavities it was not addressed in this assessment.

Template: Methodology for Hazardous Building Materials Assessment, HAZ, November 23, 2021

© 2022 Pinchin Ltd.

**APPENDIX IV**

**Location Summary Report**

HMIS
HAZARDOUS MATERIALS INVENTORY SYSTEM

# LOCATIONS LIST

PINCHIN
1.855.PINCHIN www.pinchin.com

**Client:HDH**
**Building Name: 166 Brock Street, Kingston**
**Survey Date:**

**Site: 166 Brock Street, Kingston, ON**
**Last Re-Assessment:**

| Location No. | Name or Description | Area $ft^2$ | Floor No. | Bldg. Phase | Notes |
|---|---|---|---|---|---|
| 329 | Supply/workroom, room no. JM0-119-0 | 1560 | B | E | |
| 348 | Sorting Room, room no. JM0-130-0 | 910 | B | E | |


Copyright Pinchin Ltd. 2022

# APPENDIX V

## Hazardous Materials Summary Report / Sample Log

HMIS
HAZARDOUS MATERIALS INVENTORY SYSTEM

# HAZARDOUS MATERIALS SUMMARY / SAMPLE LOG

PINCHIN
1.855.PINCHIN www.pinchin.com

**Client:HDH** **Site: 166 Brock Street, Kingston, ON** **Building Name: 166 Brock Street, Kingston** **Survey Date:**

| HAZMAT | Sample No | System/Material/Sample Description | Locations | Bldg. Phase | LF | SF | EA | % | Type | Positive | Friability |
|---|---|---|---|---|---|---|---|---|---|---|---|
| Asbestos | S8019 ABC | Floor \| Firestopping (mastic) \| Red, Pipe Penetration | 348(JM0-130-0) | E | 0 | 0 | 0 | 100 | None Detected | No | |
| Asbestos | S8020 ABC | Ceiling \| Ceiling Tiles (lay-in) \| 2x4 Smooth | 348(JM0-130-0) | E | 0 | 0 | 0 | 100 | None Detected | No | |
| Asbestos | S8021 ABC | Wall \| Caulking \| Off-white, Cabinet | 348(JM0-130-0) | E | 0 | 0 | 0 | 100 | None Detected | No | |
| Asbestos | S8022 ABC | Floor \| Terrazzo \| Beige | 329(JM0-119-0),348(JM0-130-0) | E | 0 | 0 | 0 | 100 | None Detected | No | |
| Asbestos | S8023 ABC | Wall \| Concrete (precast) \| White | 329(JM0-119-0),348(JM0-130-0) | E | 0 | 0 | 0 | 100 | None Detected | No | |
| Asbestos | S8024 ABC | Structure \| Paint \| White | 348(JM0-130-0) | E | 0 | 0 | 0 | 100 | None Detected | No | |
| Asbestos | S8025 ABC | Ceiling \| Drywall And Joint Compound \| | 348(JM0-130-0) | E | 0 | 0 | 0 | 100 | None Detected | No | |
| Asbestos | V0000 | Ceiling \| Ceiling Tiles (lay-in) \| 2x4 Small Speckles, Dated 07/05/2018 | 329(JM0-119-0),348(JM0-130-0) | E | 0 | 0 | 0 | 100 | Non Asbestos | No | |
| Asbestos | V0000 | Wall \| Silicone \| White, Tray Wash Window Flashing | 348(JM0-130-0) | E | 0 | 0 | 0 | 0 | Non Asbestos | No | |
| Paint | L0009 | Wall \| Concrete (precast) \| White | 329(JM0-119-0),348(JM0-130-0) | E | 0 | 0 | 0 | 100 | | No | - |
| Paint | L0010 | Structure \| Concrete (poured) \| White, Column | 348(JM0-130-0) | E | 0 | 0 | 0 | 100 | | No | - |
| Paint | L0011 | Other \| Wood \| Beige, Cabinets | 348(JM0-130-0) | E | 0 | 0 | 2 | 0 | Lead (Low) | Yes | - |
| Paint | L0012 | Ceiling \| Drywall And Joint Compound \| White | 348(JM0-130-0) | E | 0 | 0 | 0 | 100 | | No | - |
| PCB | P0003 | Caulking \| Off-white Cabinet | 348(JM0-130-0) | E | 0 | 0 | 0 | 100 | - | No | - |
| PCB | V0000 | Caulking | 348(JM0-130-0) | E | 0 | 0 | 0 | 0 | - | No | - |
| PCB | V0000 | Light Ballasts | 329(JM0-119-0),348(JM0-130-0) | E | 0 | 0 | 0 | 0 | - | No | - |
| Hg | V9000 | Fluorescent Light Tube | 329(JM0-119-0),348(JM0-130-0) | E | 0 | 0 | 0 | 50 | Hg | Yes | - |
| Hg | V9000 | Manometer | 329(JM0-119-0),348(JM0-130-0) | E | 0 | 0 | 0 | 50 | Hg | Yes | - |


Quantities shown above are based on visual approximations only and may be subject to variation. Copyright Pinchin Ltd. 2022

# Legend:

| Sample number | |
|---|---|
| S#### | Asbestos sample collected |
| L#### | Paint sample collected |
| P#### | PCB sample collected |
| M#### | Mould sample collected |
| V#### | Material visually similar to numbered sample collected |
| V0000 | Known non Hazardous Material |
| V9000 | Material is visually identified as Hazardous Material |
| V9500 | Material is presumed to be Hazardous Material |
| [Loc. No.] | Abated Material |

| Units | |
|---|---|
| SF | Square feet |
| LF | Linear feet |
| EA | Each |
| % | Percentage |

| | |
|---|---|
| NF | Non Friable material. |
| F | Friable material |
| PF | Potentially Friable material |


Quantities shown above are based on visual approximations only and may be subject to variation. Copyright Pinchin Ltd. 2022

**APPENDIX VI**

**HMIS All Data Report**

HMIS
HAZARDOUS MATERIALS INVENTORY SYSTEM

# ALL DATA REPORT

PINCHIN
1.855.PINCHIN www.pinchin.com

**Client: HDH** **Site: 166 Brock Street, Kingston, ON** **Building Name: 166 Brock Street, Kingston**
**Location: #329 : Supply/workroom** **Floor: B** **Room #: JM0-119-0** **Area (sqft): 1560**
**Survey Date: 2022-01-17** **Last Re-Assessment: 0000-00-00**

**ASBESTOS**

| System | Component | Material | Item | Covering | A* | V* | AP* | Good | Fair | Poor | Unit | Sample | Asbestos Type | Amount | Hazard | Friable |
|---|---|---|---|---|---|---|---|---|---|---|---|---|---|---|---|---|
| Ceiling | All | Ceiling Tiles (lay-in), 2x4 small speckles, dated 07/05/2018 | | | C | Y | | 100 | | | % | V0000 | Non-Asbestos | | None | |
| Duct | All | Fibreglass | | Foil Face | C | N | | | | | | | | | | |
| Duct | All | Not Insulated | | | | | | | | | | | | | | |
| Floor | All | Terrazzo, Beige | | | A | Y | | 99 | | 1 | % | S8022C | None Detected | N.D. | None | |
| Mechanical Equipment | | None Found | | | | | | | | | | | | | | |
| Piping | All | Fibreglass | | | C | N | | | | | | | | | | |
| Piping | All | Not Insulated | | | C | N | | | | | | | | | | |
| Structure | Deck | Concrete (poured) | | | C | N | | | | | | | | | | |
| Wall | All | Concrete (precast), White | | | A | Y | | 100 | | | % | V8023 | None Detected | N.D. | None | |

**Client: HDH** **Site: 166 Brock Street, Kingston, ON** **Building Name: 166 Brock Street, Kingston**
**Location: #329 : Supply/workroom** **Floor: B** **Room #: JM0-119-0** **Area (sqft): 1560**
**Survey Date: 2022-01-17** **Last Re-Assessment: 0000-00-00**

**PAINT**

| System | Item | Good | Poor | Unit | Sample | Sample Description | Amount | Hazard |
|---|---|---|---|---|---|---|---|---|
| Wall | Concrete (precast) | 100 | | % | V0009 | White | Pb: 0.0019 % | No |

**Client: HDH** **Site: 166 Brock Street, Kingston, ON** **Building Name: 166 Brock Street, Kingston**
**Location: #329 : Supply/workroom** **Floor: B** **Room #: JM0-119-0** **Area (sqft): 1560**
**Survey Date: 2022-01-17** **Last Re-Assessment: 0000-00-00**

**MERCURY**

| Component | Quantity | Unit | Sample | Hazard |
|---|---|---|---|---|
| Manometer | 100 | % | V9000 | Yes |
| Fluorescent Light Tube | 100 | % | V9000 | Yes |

**Client: HDH** **Site: 166 Brock Street, Kingston, ON** **Building Name: 166 Brock Street, Kingston**
**Location: #329 : Supply/workroom** **Floor: B** **Room #: JM0-119-0** **Area (sqft): 1560**
**Survey Date: 2022-01-17** **Last Re-Assessment: 0000-00-00**

**PCB**

| Component | Quantity | Unit | Sample | Sample Description | Amount | PCB |
|---|---|---|---|---|---|---|
| LIGHT BALLASTS | | Kg | V0000 | | | No |

**Client: HDH** **Site: 166 Brock Street, Kingston, ON** **Building Name: 166 Brock Street, Kingston**
**Location: #329 : Supply/workroom** **Floor: B** **Room #: JM0-119-0** **Area (sqft): 1560**
**Survey Date: 2022-01-17** **Last Re-Assessment: 0000-00-00**

**MOULD**

| System | Material | Visible | Quantity | Unit | Sample Type | Sample No | Sample Description | Mould |
|---|---|---|---|---|---|---|---|---|
| Floor | Terrazzo | | 3 | SF | V9 | | Water damage | Presumed |


Quantities shown above are based on visual approximations only and may be subject to variation. Copyright Pinchin Ltd. 2022

Quantities shown above are based on visual approximations only and may be subject to variation. Copyright Pinchin Ltd. 2022

**Client: HDH** **Site: 166 Brock Street, Kingston, ON** **Building Name: 166 Brock Street, Kingston**
**Location: #348 : Sorting Room** **Floor: B** **Room #: JM0-130-0** **Area (sqft): 910**
**Survey Date: 2022-01-17** **Last Re-Assessment: 0000-00-00**

| ASBESTOS | | | | | | | | | | | | | | | | |
|---|---|---|---|---|---|---|---|---|---|---|---|---|---|---|---|---|
| System | Component | Material | Item | Covering | A* | V* | AP* | Good | Fair | Poor | Unit | Sample | Asbestos Type | Amount | Hazard | Friable |
| Ceiling | All | Ceiling Tiles (lay-in), 2x4 small speckles, dated 07/05/2018 | | | C | Y | | 100 | | | % | V0000 | Non-Asbestos | | None | |
| Ceiling | All | Ceiling Tiles (lay-in), 2x4 smooth | | | C | Y | | 100 | | | % | S8020ABC | None Detected | N.D. | None | |
| Ceiling | Bulkhead | Drywall and joint compound | | | C | Y | | 100 | | | % | S8025ABC | None Detected | N.D. | None | |
| Duct | All | Fibreglass | | Foil Face | C | N | | | | | | | | | | |
| Duct | All | Not Insulated | | | C | N | | | | | | | | | | |
| Floor | All | Terrazzo, Beige | | | A | Y | | 100 | | | % | S8022AB | None Detected | N.D. | None | |
| Floor | Base | Firestopping (mastic), Red, pipe penetration | | | A | Y | | 100 | | | % | S8019ABC | None Detected | N.D. | None | |
| Mechanical Equipment | | None Found | | | | | | | | | | | | | | |
| Piping | All | Fibreglass | | | C | N | | | | | | | | | | |
| Piping | All | Armaflex | | | C | N | | | | | | | | | | |
| Piping | All | Not Insulated | | | C | N | | | | | | | | | | |
| Structure | Column | Paint, White | | | A | Y | | 100 | | | % | S8024ABC | None Detected | N.D. | None | |
| Structure | Deck | Concrete (poured) | | | C | N | | | | | | | | | | |
| Wall | All | Concrete (precast), White | | Paint | A | Y | | 100 | | | % | S8023ABC | None Detected | N.D. | None | |
| Wall | All | Caulking, Off-white, cabinet | | | A | Y | | 100 | | | % | S8021ABC | None Detected | N.D. | None | |
| Wall | All | Silicone, White, tray wash window flashing | | | | | | | | | | V0000 | Non-Asbestos | | None | |

**Client: HDH** **Site: 166 Brock Street, Kingston, ON** **Building Name: 166 Brock Street, Kingston**
**Location: #348 : Sorting Room** **Floor: B** **Room #: JM0-130-0** **Area (sqft): 910**
**Survey Date: 2022-01-17** **Last Re-Assessment: 0000-00-00**

| PAINT | | | | | | | | |
|---|---|---|---|---|---|---|---|---|
| System | Item | Good | Poor | Unit | Sample | Sample Description | Amount | Hazard |
| Wall | Concrete (precast) | 100 | | % | L0009 | White | Pb: 0.0019 % | No |
| Ceiling | Drywall and joint compound | 100 | | % | L0012 | White | Pb: 0.0013 % | No |
| Other | Wood | 2 | | EA | L0011 | Beige, cabinets | Pb: 0.0815 % | Lead (Low) |
| Structure | Concrete (poured) | 100 | | % | L0010 | White, column | Pb: 0.0009 % | No |

**Client: HDH** **Site: 166 Brock Street, Kingston, ON** **Building Name: 166 Brock Street, Kingston**
**Location: #348 : Sorting Room** **Floor: B** **Room #: JM0-130-0** **Area (sqft): 910**
**Survey Date: 2022-01-17** **Last Re-Assessment: 0000-00-00**

| MERCURY | | | | |
|---|---|---|---|---|
| Component | Quantity | Unit | Sample | Hazard |
| Manometer | 100 | % | V9000 | Yes |
| Fluorescent Light Tube | 100 | % | V9000 | Yes |

**Client: HDH** **Site: 166 Brock Street, Kingston, ON** **Building Name: 166 Brock Street, Kingston**
**Location: #348 : Sorting Room** **Floor: B** **Room #: JM0-130-0** **Area (sqft): 910**


Quantities shown above are based on visual approximations only and may be subject to variation. Copyright Pinchin Ltd. 2022

**Survey Date: 2022-01-17** **Last Re-Assessment: 0000-00-00**

| PCB | | | | | | |
|---|---|---|---|---|---|---|
| Component | Quantity | Unit | Sample | Sample Description | Amount | PCB |
| CAULKING | 100 | % | P0003 | Off-white cabinet | <5 mg/kg | No |
| CAULKING | | Kg | V0000 | Silicone | | No |
| LIGHT BALLASTS | | Kg | V0000 | | | No |


Quantities shown above are based on visual approximations only and may be subject to variation. Copyright Pinchin Ltd. 2022

# Legend:

| Sample number | |
|---|---|
| S#### | Asbestos sample collected |
| L#### | Paint sample collected |
| P#### | PCB sample collected |
| M#### | Mould sample collected |
| V#### | Material is visually identified to be identical to S#### |
| V0000 | Known non hazardous material |
| V9000 | Material visually identified as a Hazardous Material |
| V9500 | Material is presumed to be a hazardous material |

| Units | |
|---|---|
| SF | Square feet |
| LF | Linear feet |
| EA | Each |
| % | Percentage |
| LF | Linear feet |

| Other | |
|---|---|
| A | Access |
| V | Visible |
| AP | Air Plenum |
| F | Friable material |
| NF | Non Friable material |
| PF | Potentially Friable material |
| Pb | Lead |
| Hg | Mercury |
| As | Arsenic |
| Cr | Chromium |

| Access | |
|---|---|
| A | Accessible to all building occupants |
| B | Accessible to maintenance and operations staff without a ladder |
| C | Accessible to maintenance and operations staff with a ladder. Also rarely entered, locked areas |
| D | Not normally accessible |

| Condition | |
|---|---|
| Good | No visible damage or deterioration |
| Fair | Minor, repairable damage, cracking, delamination or deterioration |
| Poor | Irreparable damage or deterioration with exposed and missing material |

| Visible | |
|---|---|
| Y | The material is visible when standing on the floor of the room, without the removal or opening of other building components (e.g. ceiling tiles or access panels). |
| N | The material is not visible to view when standing on the floor of the room and requires the removal of a building component (e.g. ceilings tiles or access panels) to view and access. Includes rarely entered crawlspaces, attic spaces, etc. Observations will be limited to the extent visible from the access points. |

| Air Plenum | |
|---|---|
| Yes or No | The material is in a return air plenum or in a direct airstream or there is evidence of air erosion (e.g. duct for heating or cooling blowing directly on or across an ACM). This field is only completed where Air Plenum consideration is required by regulation. |

| Colour Coding | |
|---|---|
| | The material is known to contain regulated concentrations of asbestos; either by analytical results or visible identification (use of the V9000 code). |
| | The material is presumed to contain asbestos; based on visual appearances; typically a material known to historically contain asbestos; however, not sampled due to limited access or the destructive nature of the sampling. |

| Action | | | | | |
|---|---|---|---|---|---|
| (1) | Clean up of ACM Debris | (2) | Precautions for Access Which may Disturb ACM Debris | (3) | ACM removal |
| (4) | Precautions for Work Which may Disturb ACM in Poor Condition | (5) | Proactive ACM removal (Minimum repair required for fair condition) | (6) | ACM repair |
| (7) | Management program and surveillance | | | | |


Quantities shown above are based on visual approximations only and may be subject to variation. Copyright Pinchin Ltd. 2022

This page intentionally left blank.

# SECTION 04 05 10
CONCRETE AND MASONRY CLEANING

## PART 1 - GENERAL

### 1.1 SUMMARY

A. Furnish labor, materials, tools, equipment, and services for Masonry Cleaning in accordance with provisions of Contract Documents.

B. Completely coordinate with work of other trades.

### 1.2 RELATED SECTIONS

A. Division 1

B. 04 22 00 Concrete Unit Masonry

### 1.3 SUBMITTALS

A. Refer to Division 1 Submittal Requirements.

B. Product Data:
1. For each type of material and accessory.
2. Sustainable Design: Refer to 01 81 13 LEED Requirements.

C. Project Information:
1. Name of proposed product and manufacturer.
2. Certification that the proposed products are compatible with materials on subject project.

## PART 2 - PRODUCTS

### 2.1 MANUFACTURERS

A. Cleaners:
1. Base:
   a. ProSoCo.
2. Optional:
   a. Fabrikem.

B. Other manufacturers desiring approval comply with Division 1.

### 2.2 MATERIALS

A. Use only products which are recommended by manufacturer of material to be cleaned.

B. Brick Masonry Cleaner:
1. Verify compatibility with brick manufacturer.
   a. Base Product: Sure Klean Vana Trol by ProSoCo.
2. Red Brick:
   a. Base Product: Sure Klean Lime Solvent 101 by ProSoCo.
3. Light-colored, Chocolate-colored, Brown, Gray and others which are subject to metallic staining:
   a. Base Product: Sure Klean Vana Trol by ProSoCo.

C. Clay- fired brick Paver Cleaner:
1. Base Product: Sure Klean 600 Detergent by ProSoCo.

D. Concrete Masonry (CMU) Cleaners:
1. Clean CMU which will remain exposed to view (including CMU walls which are scheduled for painting).

2. Lightweight and Normal Weight CMU:
   a. Base Product: Sure Klean Custom Masonry Cleaner by ProSoCo.
3. Burnished / Ground-faced CMU:
   a. Base Product: Sure Klean Light Duty Concrete Cleaner by ProSoCo.

E. Cast-in-Place Concrete Cleaner:
1. Clean Cast-in-Place concrete walls which will remain exposed to view (including CIP walls which are scheduled for painting).
2. Clean with most effective products which are appropriate for texture and color specified.
3. Smooth Textures:
   a. Base Product: Sure Klean Light Duty Concrete Cleaner by ProSoCo.
4. Abrasive blasted, Etched, and Exposed-aggregate Textures:
   a. Base Product: Sure Klean Custom Masonry Cleaner or Heavy-duty Concrete Cleaner, both by ProSoCo.

F. Architectural Precast Concrete (APC) Cleaner:
1. Clean with most effective products which are appropriate for texture and color specified.
2. Base Product: Sure Klean Light Duty Concrete Cleaner by ProSoCo.

G. Natural Stone Cleaner:
1. Base Product: EnviroClean Mortar and Grout Remover by ProSoCo.
2. Perform testing with Limestone on subject project to determine that this cleaner is compatible.

H. Cleaners for Simulated Masonry:
1. Cleaning of Simulated Masonry is specified in Section 04 73 05.
2. The products listed in this Section shall not come in contact with Simulated Masonry (Section 04 73 05).
3. During the cleaning of adjacent materials, protect Simulated Masonry from damage caused by chemicals used in this Section.

## PART 3 - EXECUTION

### 3.1 INSPECTION

A. Examine surfaces to be cleaned.
1. Where necessary point with mortar.

B. Waiting time before cleaning:
1. Mortar Type N: Allow mortar to cure for 14 to 28 days prior to cleaning.
2. Mortar Types M and S: Allow mortar to cure for 7 to 14 days prior to cleaning.
3. Colored Mortar: Allow mortar to cure for 28 days prior to cleaning.

C. Remove excess mortar using wooden paddles and scrapers.

D. Do not proceed with cleaning until unsatisfactory conditions have been corrected.

E. Test 4 x 4 FT1200 x 1200 mm area of each surface type for compatibility with cleaner, using recommended dilutions, prior to full scale cleaning operations.

F. Cleaning indicates acceptance of surfaces and responsibility for performance.

### 3.2 PREPARATION

A. Protect adjacent surfaces, not scheduled for cleaning.

B. Prepare surfaces as recommended by manufacturer.

### 3.3 CLEANING

A. Clean surfaces as recommended by manufacturer.

B. Protect adjacent materials from potential damage caused by chemicals used in this Section.

C. Do not use wire brushes.

D. Thoroughly rinse and pre-soak walls.

E. Flush loose mortar and dirt from surface.

F. Wet to prevent runoff streaking.

G. Apply solution using fibered wall washing brush or low-pressure spray.
   1. Maximum Pressure: not to exceed 400 PSI2,750 kPa.
   2. Tip spray angle: Not less than 25 degrees.
   3. Maximum rate of flow: 4 to 6 GPM15 to 23 LPM.
   4. Tip shall be held at least 12 IN300 mm from surface of masonry.
   5. Comply with manufacturer's recommendations, where more restrictive.

H. Scrape off mortar and re-apply cleaning solution.

I. After scrubbing, clean thoroughly with low pressure water.
   1. Comply with low-pressure spray criteria listed above.

## END OF SECTION

This page intentionally left blank.

# SECTION 04 05 13

## PORTLAND CEMENT - LIME MORTAR AND GROUT

## PART 1 - GENERAL

### 1.1 SUMMARY

A. Furnish labor, materials, tools, equipment, and services for Portland Cement - Lime Mortars and Grout, as indicated, in accordance with provisions of Contract Documents.

B. Completely coordinate with work of other trades.

### 1.2 RELATED SECTIONS

A. Division 1

B. Section 04 05 10 Masonry Cleaning

C. Section 04 05 23 Masonry Accessories

D. Section 04 22 00 Concrete Masonry Units

### 1.3 QUALITY ASSURANCE

A. ASTM International (ASTM):
1. ASTM C143 Standard Test Method for Slump of Hydraulic-Cement Concrete.
2. ASTM C144 Standard Specification for Aggregate for Masonry Mortar.
3. ASTM C150 Standard Specification for Portland Cement.
4. ASTM C207 Standard Specification for Hydrated Lime for Masonry Purposes.
5. ASTM C270 Specification for Unit Masonry.
6. ASTM C404 Standard Specification for Aggregates for Masonry Grout.
7. ASTM C476 Standard Specification for Grout for Masonry.

B. American Concrete Institute (ACI):
1. ACI 530.1 Building Code Requirements and Specification for Masonry Structures.

C. Brick Industry Association (BIA):
1. Technical Notes.

D. Cold Weather Procedures:
1. Specified in Section 04 05 05.

E. Hot Weather Procedures:
1. When ambient temperature is over 100 DEGF 38 DEGC, or over 90 DEGF 32 DEGC with a wind over 8 MPH 13 kph:
   a. Monitor mortar temperature and maintain it between 70 to 120 DEGF 21 to 49 DEGC.
   b. Limit spreading of bed mortar to 4 FT 1.2 m, maximum, and place masonry units within 1 minute of spreading.

F. Definitions:
1. PCL Mortar: Portland Cement-Lime Mortar.
2. PCL Grout: Portland Cement-Lime Grout.
3. Use of masonry cement alone, or in combination with PCL mixes, is prohibited.
4. Pre-Blended: Factory blend mortar mix dry ingredients including; sand, cement, lime, pigments, etc.

G. LEED Requirements:
1. Refer to Section 01 81 13, LEED v2009 Requirements, for additional performance requirements that may apply to products specified in this section.
2. Refer to Section 01 81 14, LEED v4 Requirements, for additional performance requirements that may apply to products specified in this section.

3. Refer to Section 01 81 16, LEED HC v2009 Requirements, for additional performance requirements that may apply to products specified in this section.
4. Refer to Section 01 81 17, LEED HC v4 Requirements, for additional performance requirements that may apply to products specified in this section.

### 1.4 SUBMITTALS

A. Product Data:
1. Material certificates for each material used in proposed mix designs.

B. Samples:
1. Ribbon samples of colored mortar for pre-approval.
2. Provide pre-approved mortar color to Contractor for use in construction of Mock-up wall where Mock-up walls are specified in other Sections.
   a. Provide additional colors, as required by Architect, until colors receive final approval.

## PART 2 - PRODUCTS

### 2.1 MANUFACTURERS

A. Factory Pre-blended PCL Mortar:
1. Base:
   a. Spec Mix.
2. Optional:
   a. Amerimix (Bonsal).

B. Site-mixed Mortar:
1. Base:
   a. Products as indicated.

C. Site Mixed PCL Grout:
1. Base:
   a. Products as indicated.

D. Factory Pre-blended PCL Grout Mixes:
1. Base:
   a. Spec Mix.
2. Optional:
   a. ProSpec (Bonsal).

E. Integral Waterproofing Mortar admixture, for mortar mixes used with Glass Unit Masonry Units at Exterior and/or Interior wet areas:
1. Base:
   a. Sonneborn Building Products; Hydracide Powder.
2. Optional:
   a. Master Builders; MasterPel 235.
   b. Laticrete 8510.

F. Other manufacturers desiring approval comply with Division 01.

### 2.2 MATERIALS

A. Factory Pre-blended Mortar Mix:
1. Use approved mix designs which comply with ASTM C270, Property Method.
2. Blend cementitious materials, aggregate and admixtures in factory under controlled conditions, which requires only addition of water at project site.
3. Oven-dry aggregates prior to measuring and include in pre-blended mix.

B. Site-mixed Mortar:
1. Use approved mix designs which comply with ASTM C270, Property Method.

C. Use of Mortar in Fire Rated Walls: Wherever a fire resistance rating is indicated for masonry wall provide mortar of type that has been tested and listed for construction indicated.

D. Pre-blended mortars shall not contain supplemental cementitious materials derived from coal fired power plant wastes shall not have a mercury content >5.5ppb.

E. Fly ash shall not be generated from municipal solid waste incinerators.

F. Portland Cement: ASTM C150, Type I, II or III.
   1. Air-entraining cement is not permitted.
   2. Portland Cement Color: As indicated below for each application.
   3. Maximum percent of alkalis: 0.60.
   4. The use of blended hydraulic cements, including: Portland blast-furnace slag cement, Portland-pozzolan cement, slag cement, and natural cement is not permitted.

G. Hydrated Lime:
   1. ASTM C207, Type S.

H. Mortar Aggregate:
   1. ASTM C144.
   2. Aggregate Color: As indicated below for each application.

I. Mortar pigments, where indicated: ASTM C979.
   1. Commercial colorants compounded for mortar.
   2. Do not exceed manufacturer's recommended pigment to cement ratios.
   3. Use only non-organic pigments. Metallic oxides and/or carbon black are acceptable.

J. Water: Potable.

K. Do not use the following ingredients:
   1. Do not use antifreeze additives.
   2. Do not use calcium chloride, thiocyanates, or other materials containing chloride ions.
   3. Other admixtures: Not permitted without prior approval by Architect.
   4. Do not use ready mix mortar.
   5. Do not use masonry cement.

L. PCL mortar mixes to comply with ASTM C270, property specification using component materials listed above:
   1. Limit air content to 10 PCT, maximum.
   2. Use appropriate type as indicated by following Table 4110A, for each condition.
   3. Four types of mortar - only three are typically used:

**TABLE 4110A - Basic Mortar Type Selection**

| Location | Building Segment | Mortar Type per ASTM C270 |
|---|---|---|
| Exterior Masonry at or below grade | Foundation walls<br>Retaining walls<br>Sewers & manhole, and paving | **M** |
| Exterior Masonry above grade | Reinforced or Load Bearing brick / block walls<br>Glass Unit Masonry<br>Veneer Masonry, Parapets, and Chimneys >30 FT above grade<br>Other areas with severe exposure | **S** |
| | Non-load bearing brick/block walls<br>Veneer Masonry, where <30 FT above grade | **N** (or S) |
| | Parapets and chimneys where <30 FT above grade | **N** |
| Interior Masonry | Load bearing brick/block walls | **N** |

| TABLE 4110A - Basic Mortar Type Selection | | |
|---|---|---|
| Location | Building Segment | Mortar Type per ASTM C270 |
| | Non-load bearing brick/block walls<br>Glass Unit Masonry<br>Brick/block veneers | |

M. Use following mortar colors in conjunction with Table 4110A to determine mixes of appropriate combinations of type and color for each project condition.
   1. Mortar Color MC-1:
      a. Location used:
         1) Typical at face brick veneer, See Section 04 21 13.
         2) Other areas where indicated.
      b. Method:
         1) Factory pre-blended mortar.
         2) Site-mixed mortar.
      c. Mortar Color:
         1) Natural Grey (no pigment).
         2) Spec mix color _____.
         3) Color_____.
      d. Portland Cement Color:
         1) Natural.
         2) White.
      e. Aggregate Color:
         1) Natural.
         2) White.
   2. Mortar Color MC-2:
      a. Location used:
         1) CMU walls. See Section 04 22 00.
         2) Other areas where indicated.
      b. Method:
         1) Factory pre-blended mortar.
         2) Site-mixed mortar.
      c. Mortar Color:
         1) Natural Grey, no pigment.
         2) Spec mix color _____.
         3) Color_____.
      d. Portland Cement Color:
         1) Natural.
         2) White.
      e. Aggregate Color:
         1) Natural.
         2) White.
   3. Mortar Color MC-3:
      a. Location used:
         1) Glass Unit Masonry. See Section 04 23 00.
      b. Method:
         1) Site-mixed mortar. Factory pre-blended mortar may be used at contractor's option.
         2) Factory Pre-blended Mortar.
      c. Mortar Color:
         1) White.
         2) Natural grey (non-pigmented).
         3) Spec mix color _____.
         4) Color_____.
      d. Portland Cement Color:

1) White.
2) Natural.

e. Aggregate Color:
1) White, silica sand.
2) Natural.

f. Integral Waterproofing Mortar admixture.
1) Use where glass unit masonry walls will be exposed to exterior and/or interior wet areas.

g. Reduce the amount of water in mortar mixes that will be used with glass unit masonry as required to account for their lack of absorptive properties.

h. Do not re-temper mortar mixes used with glass unit masonry.

4. Mortar color MC-4, setting mortar for natural stone veneer:
a. Location used:
1) Setting mortar for handset Indiana limestone veneer. See Section 04 42 03.
2) Setting Mortar for granite and marble veneer. See Section 04 42 00.

b. Method:
1) Factory pre-blended mortar.
2) Site-mixed Mortar.

c. Mortar color:
1) Natural grey, non-pigmented.
2) Spec mix color _____.
3) Color_____.

d. Portland cement color:
1) Natural.

e. Aggregate color:
1) Natural.

f. Proportions: 1 part Portland cement, 1 part hydrated lime, 6 parts sand.

5. Mortar color MC-5, pointing mortar for natural stone veneer:
a. Location used:
1) Pointing mortar for stone veneer, See Section 04 42 00.

b. Method:
1) Factory pre-blended mortar.
2) Site-mixed mortar.

c. Mortar color:
1) White.
2) Natural grey, non-pigmented.
3) Spec mix color _____.
4) Color_____.

d. Portland cement color:
1) White.
2) Natural.

e. Aggregate color:
1) White, silica sand passing a no. 16 sieve.
2) Natural.

f. Proportions: 1 part Portland cement, 1 part hydrated lime, 6 parts sand.

6. Mortar color MC-6:
a. Location used:
1) Setting mortar for manufactured stone masonry veneer, See Section 04 73 05.
2) Other areas where indicated.

b. Type: ASTM C270, Type N, Property Method.
1) Exception: Use Type S where recommended by manufacturer.

c. Latex/Acrylic modifier: As recommended by manufacturer.

d. Method:
1) Factory pre-blended mortar.
2) Site-mixed mortar.

e. Mortar color:
   1) Natural grey, no pigment.
f. Portland cement color:
   1) Natural.
g. Aggregate color:
   1) Natural.

7. Mortar Color MC-7:
   a. Location used:
      1) Pointing mortar for manufactured stone masonry veneer. See Section 04 73 05.
      2) Other areas where indicated.
   b. Type: ASTM C270, Type N, Property Method.
      1) Exception: Use Type S where recommended by manufacturer.
   c. Latex/Acrylic modifier: As recommended by manufacturer.
   d. Method:
      1) Factory pre-blended mortar.
      2) Site-mixed mortar.
   e. Mortar color:
      1) Natural grey, no pigment.
      2) Spec mix color _____.
      3) Color_____.
   f. Portland cement color:
      1) Natural.
      2) White.
   g. Aggregate color:
      1) Natural.
      2) White.
8. Mortar color MC-8:
   a. Location used:
      1) Typical at calcium silicate masonry unit veneers, See Section 04 73 13.
   b. Method:
      1) Factory pre-blended mortar.
      2) Site-mixed mortar.
   c. Mortar color:
      1) White.
      2) Natural grey. no pigment.
      3) Spec Mix color _____.
      4) Color_____.
   d. Portland cement color:
      1) White.
      2) Natural.
   e. Aggregate color:
      1) White.
      2) Natural..

N. Grout:
   1. Site Mixed PCL Grout:
      a. Use approved mix designs.
      b. Mix on-site using approved materials as indicated.
      c. Factory pre-blended dry grout mixes may be used at contractor's option.
      d. Ready-mixed product, delivered to site for direct placement in walls, may be used at contractor's option.
   2. Factory pre-blended PCL grout mix:
      a. Use approved mix designs.
      b. Blend cementitious materials, aggregate and admixtures in factory under controlled conditions, which requires only the addition of water at the project site.

c. Oven-dry aggregates prior to measuring and include in the pre-blended mix supplied to the site.

3. PCL Grout Mixes:
   a. Comply with ASTM C476.
   b. Portland Cement: ASTM C150, Type I, II or III.
      1) Air-entraining cement is not permitted.
      2) Maximum percent of alkalis: 0.60.
   c. Grout aggregate: ASTM C404.
      1) Maximum Aggregate Size: 3/8 IN 9.5 mm.
      2) The use of blast furnace slag is not permitted.
   d. Hydrated lime:
      1) ASTM C207, Type S.
   e. Water: Clean and potable.
   f. Other admixtures: Not permitted without prior approval by Architect.
   g. Compressive Strength: As indicated by GROUT MIX SCHEDULE, below, for each type.
   h. Slump for Grout Measured in accordance with ASTM C143:
      1) Minimum: 8 IN 200 mm.
      2) Maximum: 10 IN 250 mm.
   i. Adjust consistency to satisfaction of mason, subject to strength requirements.
4. Concrete fill: Specified in Section 03_____.
   a. Use in following location:
5. Grout Mix GM-1:
   a. Site mixed grout.
      1) Redi-mixed or factory pre-blended may be used at contractor's option.
      2) Factory pre-blended Grout.
      3) Gypsum is not allowed in grout mixtures.
   b. Compressive strength, 28-day:
      1) Minimum 2000 PSI 13.8 MPa.
      2) Minimum 2500 PSI 17.2 MPa.
      3) Minimum 3000 PSI 20.7 MPa.
   c. Location used:
      1) Fill for CMU walls.
      2) Hollow metal door frames.
      3) Elevator frames and sills.
      4) Other indicated locations.
   d. Grout color: Natural grey, no pigment.
   e. Portland cement color: Natural.
   f. Aggregate color: Natural.

## PART 3 - EXECUTION

### 3.1 INSTALLATION

A. Comply with provisions of ACI 530 and ACI 530.1, except where exceeded by requirements of the contract documents.

### 3.2 MORTAR INSTALLATION

A. Mix materials minimum of 5 minutes, but not more than 10 minutes.

B. Adjust consistency to satisfaction of mason subject to compliance with specified criteria.

C. Comply with BIA Standard MI-72.

D. Install in accordance with BIA Standards.

E. Strike joints to create a uniformly concave final joint.

F. If mortar begins to stiffen, it may be re-tempered in accordance with ASTM C270, Subparagraph 7.4.
   1. Exception: Re-tempering is not permitted for mixes used with glass unit masonry.

G. Use mortar within 2-1/2 HRS of initial mixing.
   1. Exception: Reduce to 1-1/2 HR where used in conjunction with glass unit masonry.

H. Remove units which are disturbed after laying. Clean off original mortar and reset with fresh mortar.

### 3.3 GROUT INSTALLATION

A. Mix materials minimum of 5 minutes, but not more than 10 minutes.

B. Use grout within 1-1/2 HRS after initial mixing.

C. Use coarse grout in spaces larger than 2 IN 50 mm in both directions.

D. Use fine grout in spaces with least dimension is less than 2 IN 50 mm.

E. Grout Installation – Frames:
   1. Use fine grout for hollow metal door frames.
      a. Grout frames of elevator hoistway openings.
      b. Grout hollow metal door frames where the net opening is 4 FT 1.2 m and greater.

F. Grout installation – Walls:
   1. See Section 04 22 00.

**END OF SECTION**

# SECTION 04 05 23
MASONRY ACCESSORIES

## PART 1 - GENERAL

### 1.1 SUMMARY

A. Furnish labor, materials, tools, equipment, and services for Masonry Accessories, as indicated, in accordance with provisions of Contract Documents.

B. Sustainable Design Requirements:
   1. See Section 01 81 13.

C. Completely coordinate with work of other trades.

### 1.2 RELATED SECTIONS

A. Division 01

B. Section 04 05 10 Masonry Cleaning

C. Section 04 22 00 Concrete Unit Masonry

D. Section 07 92 00 Joint Sealants

### 1.3 QUALITY ASSURANCE

A. Design Responsibility:
   1. Assume responsibility for design, manufacturing and installation of masonry accessories:
      a. Comply with Section 01 71 21, Specialty Engineering requirements.
      b. Load combinations as specified by the building code.
      c. Where special loads only are shown, combine with typical loads or capacities.

B. ASTM International (ASTM):
   1. ASTM A240 Chromium and Chromium-Nickel Stainless Steel Plate, Sheet, and Strip for General Applications.
   2. ASTM A580 Stainless Steel Wire.
   3. ASTM A641 Zinc–Coated (Galvanized) Carbon Steel Wire.
   4. ASTM A615 Deformed and Plain Carbon-Steel Bars for Concrete Reinforcement.

C. Brick Industry Association (BIA):
   1. Technical Notes.
   2. Movement Joints:
      a. Movement joints used in are defined as “Expansion Joints” per BIA “Technical Notes 18A”.
         1) Construction such expansion joints per BIA Technical Note 18A.
      b. Movement joints used in CMU work are defined as “Control Joints” by NCMA TEK #10-2D.
         1) Construct such control joints per TEK #10-2D.

D. The Masonry Society (TMS)
   1. TMS 402/602/ACI 530/ASCE 5 – Building Code Requirements and Specifications for Masonry Structures.

E. American Welding Society (AWS):
   1. AWS Structural Welding Code D1.1.

### 1.4 SUBMITTALS

A. See Section 01 33 00 for requirements.

B. Product Data:

1. For each type of material and accessory.
2. Sustainable Design: [ ]

C. Samples:
1. Provide samples of materials where specified.

D. Project Information:
1. Manufacturer literature for products proposed for use.
2. Engineering calculations anchors with special loading or connection requirements.

## PART 2 - PRODUCTS

### 2.1 MANUFACTURERS

A. Masonry Anchors:
1. Base:
   a. Hohmann & Barnard, Inc.
2. Optional:
   a. Bailey.
   b. Wire-Bond.
      1) Heckmann Building Products.

B. Adjustable Wall Ties:
1. Base:
   a. Hohmann & Barnard, Inc.
2. Optional:
   a. Wire-Bond

C. Through-Wall Flashing:
1. Base:
   a. Hohmann & Barnard, Inc.
2. Optional:
   a. Hyload, Inc.
   b. York Manufacturing

D. Through-Wall Flashing:
1. Base:
   a. Hohmann & Barnard, Inc.
2. Optional:
   a. Prosoco
   b. York Manufacturing

E. Through-Wall Flashing:
1. Base:
   a. Hohmann & Barnard, Inc.

F. Through-Wall Flashing:
1. Base:
   a. Hohmann & Barnard, Inc.

G. Through-Wall Flashing:
1. Base:
   a. York Manufacturing
2. Optional:
   a. Mortar Net Solutions

H. Single Wythe Wall Flashing:
1. Base:
   a. MortarNet

I. Metal Drip Plate:
   1. Base:
      a. Hohmann & Barnard, Inc.

J. Termination Bars:
   1. Base:
      a. Tru-Fast Corporation.
   2. Optional:
      a. Heckmann Building Products, Inc.
      b. Hohmann & Barnard, Inc.

K. Head Joint Vent:
   1. Base:
      a. Hohmann & Barnard, Inc.
   2. Optional:
      a. Archovations, Inc.

L. Weep Tubes:
   1. Base:
      a. Hohmann & Barnard, Inc.
   2. Optional:
      a. Wire-Bond

M. Rope Wicks:
   1. Base: Products listed.

N. Cavity Protection Material:
   1. Base:
      a. Mortar Net Solutions.
   2. Optional:
      a. Advanced Building Products, Inc.
      b. Archovations, Inc.

O. Rainscreen Mat:
   1. Base:
      a. Archovations, Inc.

P. Cavity Wall Baffles:
   1. Base:
      a. Williams Products, Inc.

Q. Horizontal Reinforcing:
   1. Base:
      a. Hohmann & Barnard, Inc.
   2. Optional:
      a. Wire-Bond
      b. Heckmann Building Products, Inc.

R. Pre-molded Control Joint Strips:
   1. Provide at control joints in CMU walls:
   2. Base:
      a. Hohmann & Barnard, Inc.
   3. Optional:
      a. Williams Products, Inc.
      b. Wire-Bond
      c. Heckmann Building Products, Inc.

S. Galvanizing Repair Paint:
   1. Base:
      a. ZRC Worldwide

2. Optional:
   a. Tnemec, Inc.

T. Compressible Filler:
1. Base:
   a. Hohmann & Barnard, Inc.

U. Air Barrier: Specified in Division 07.

V. Loose Lintels: Specified in Section 05 50 00.

W. Structural Steel Lintels and Shelf Angles: Specified in Section 05 12 00 or Section 05 12 10.

X. Other manufacturers desiring approval comply with Section 01 61 00.
1. Substitutions must comply with sustainable design requirements. See Section 01 81 13.

## 2.2 DESIGN CRITERIA

A. Design anchorage to meet Design Loads.
1. Wind Loads: Use the greater of the following:
   a. Wind Pressures as required per local building code based on wind speed, exposure factor and importance factor noted in Structural Drawings.
   b. 30 PSF 207 kPa minimum.
2. Earthquake Loads:
   a. Wall and wall components shall be designed to satisfy requirements of Building Code and ASCE 7 Chapter 13 Seismic Design Requirements for Nonstructural Components based on the Seismic Design Category, and Importance Factor listed on the structural drawings.
3. Deflection Values: Use the greater of following:
   a. Limit deflection to values specified for Uniform Design Load Test.
   b. Limit deflection to comply with Building Code as locally adopted and amended.
   c. Limit deflection as follows:
      1) Portland cement plaster (stucco): L/360.
      2) Manufactured stone veneer, adhered stone veneer, thin brick, tile and similar mortar set finishes: L/360.
4. Structural movements of building structure:
   a. Inter-story drift caused by wind or earthquake forces.
      1) h/400 or 1/2 IN 12.5 mm maximum for wind.
   b. Live load deflection of the supporting members:
      1) Live Load L/600 or 3/8 IN 9.5 mm maximum.
      2) Post Composite Superimposed Dead Load + Live Load L/500 or 12.5 mm 1/2 IN maximum.
   c. Load Transfer Limitations:
      1) Building structural frame is designed for gravity loads of wall system to be transferred to frame, floor by floor.
5. Develop details defining method of fastening throughout system.
6. Show by engineering calculation that proposed anchors and connection hardware can safely support the anticipated loads.
7. Submit load tests indicating anchors and connection hardware can safely support the anticipated loads.
8. Comply with provisions of ACI 530 and ACI 530.1, except where exceeded by requirements of Contract Documents.

## 2.3 MATERIALS

A. Masonry Veneer Anchors:
1. Lateral movement, out-of-plane:
   a. Maximum free play: 1/16 IN1.5 mm.
   b. Maximum deflection: 0.05 IN1.25 mm when exposed to a load of 100 LBS 45 KG inward or outward.

2. Select wire ties to span cavity and provide a minimum embedment of 2 IN50 mm in masonry facing.
   a. Where cavity width exceeds 4-1/2 IN114 mm, upgrade specified wire ties to 1/4 IN6 mm diameter.
3. Stainless steel ties: Type 304.
4. Steel ties: Hot-dip Galvanized per ASTM A153, Class B2.
5. Masonry veneer anchors for metal stud back-up:
   a. Tape Seal:
      1) Use with Strap Anchors.
      2) Peel-n-stick, self-healing where screws or prongs penetrate Air Retarder and Sheathing.
      3) Apply to substrate wall in continuous vertical strips prior to installation of strap anchors.
      4) Base Product: X-Seal Tape by Hohmann & Barnard, Inc.
   b. Offset Strap-type Anchor:
      1) Base Product: X-Seal Anchor by Hohmann & Barnard, Inc.
      2) 14 GA2 mm type 304 stainless steel
      3) Depth of prongs: As required for application.
      4) Minimum vertical movement: 3-1/2 IN90 mm total.
      5) Wire Ties:
         a) Base Product: Vee Byna-Tie by Hohmann & Barnard, Inc.
         b) Type 304 stainless steel
         c) Diameter:
            (1) 3/16 IN 5 mm
            (2) 1/4 IN 6 mm.
         d) Length: As required for application.
      6) Fasteners:
         a) Base Product: Hohmann & Barnard, Inc.
         b) Self-drilling
         c) Type 304 stainless steel
         d) Hex head, with washer flange
         e) Neoprene sealing washer
   c. Offset Strap-type anchor:
      1) Hot-dip, galvanized steel
      2) Thickness: 12 GA2.75 mm.
      3) Depth of prongs: As required for application.
      4) Base Product: X-Seal Anchor by Hohmann & Barnard, Inc.
      5) Base Product: DW-10X by Hohmann & Barnard, Inc.
      6) Wire Ties:
         a) Hot-dip, galvanized steel
         b) Diameter: 3/16 IN 5 mm.
         c) Diameter: 1/4 IN6 mm.
         d) Length: As required for conditions.
         e) Base Product: Vee Byna-Tie by Hohmann & Barnard, Inc.
      7) Self-Drilling Fasteners:
         a) Material:
            (1) No. 10 zinc-plated steel.
            (2) No. 10 zinc-polymer-coated steel.
         b) Length: As required for application.
         c) Hex head, with washer flange.
         d) Neoprene sealing washer.
         e) Base Product: Standard Fastener by Hohmann & Barnard, Inc.
6. Masonry Veneer Anchors – CIP Concrete Backup:
   a. Utilize following type of anchor devices where masonry veneer is scheduled over cast-in-place concrete back-up, including:

1) Cast-in-place concrete walls, columns, footings, spandrel beams.

b. Dovetail Anchor Slots:
1) Provided by Section 04 05 21 of previous Bid Package (BP-__).
2) Include wire ties by this Section.
3) Base Product: 305 by Hohmann & Barnard, Inc.
4) Type 304 stainless steel
5) Hot Dip, galvanized steel
6) Material Thickness: Minimum 22 GA0.8 mm.
7) Nominal Size: 1 x 1 x 5/8 IN25 x 25 x 16 mm throat with foam filler.
8) Wire Ties:
a) Base Product: 315-BT by Hohmann & Barnard, Inc.
b) Compatible with width and depth of dovetail slots
c) 12 GA 2.8 MM type 304 stainless steel
d) Hot Dip, galvanized steel
e) Dovetail thickness:
(1) Diameter: 3/16 IN5 mm.
(2) Diameter: 1/4 IN6 mm.
(3) Length: As required for conditions.

c. Strap-type Anchor:
1) Base Product: DW10HS by Hohmann & Barnard, Inc.
2) Mechanically attached.
3) Installed to face of conventionally reinforced, cast-in-place concrete structural elements including sheer walls, spandrel beams, and columns.
4) 12 GA2.8 mm type 304 stainless steel.
5) 12 GA2.8 mm hot dip, galvanized steel.
6) Size: 3/4 IN x 7 IN19 mm x 180 mm.
7) 4 IN100 mm of vertical adjustability.
8) Wire Ties:
a) Type 304 stainless steel
b) Hot Dip, galvanized steel
c) Diameter: 3/16 IN5 mm.
d) Diameter: 1/4 IN6 mm.
e) Length: As required for conditions.
f) Base Product: Vee Byna-Tie by Hohmann & Barnard, Inc.
9) Fasteners:
a) Power-driven or expansion type
b) Type 304 stainless steel.
c) Hot dip, galvanized steel.
d) Diameter: 1/4 IN6 mm.
e) Embedment: 2 IN50 mm.
f) Pull-out: 120 LBS55 KG per fastener.
g) Minimum of 2 fasteners per anchor strap.

7. Masonry veneer anchors – Steel columns and spandrel beams:
a. Use following anchor devices where masonry veneers bypass steel columns and spandrel beams.
b. Offset Strap Anchor:
1) Base Product: 359FH by Hohmann & Barnard, Inc.
2) Type 304 stainless steel
3) Hot Dip, galvanized steel
4) Mechanically attach to steel column/beams.
5) Wire Ties:
a) Base Product: Vee Byna-Tie by Hohmann & Barnard, Inc.
b) Type 304 stainless steel
c) Hot Dip Galvanized Steel
d) Diameter: 3/16 IN5 MM

e) Diameter: 1/4 IN6 MM
f) Length: As required for conditions.

8. Masonry wall anchors:
   a. Use the following type of anchor devices where terminal ends of masonry walls abut steel columns:
   b. Offset Strap anchor:
      1) Base Product: 359FH by Hohmann & Barnard, Inc.
      2) Type 304 stainless steel
      3) Hot Dip Galvanized Steel
      4) Mechanically attach to steel column.
      5) Wire tie:
         a) Type 304 stainless steel
         b) Hot Dip, galvanized steel
         c) Width: As required for width of CMU.
         d) Length: 12 IN300 mm.
         e) Diameter: 3/16 IN5 mm.
         f) Diameter: 1/4 IN6 mm.
         g) Base Product: 302W by Hohmann & Barnard, Inc.

B. Rigid Steel Anchors (where CMU walls intersect other CMU walls):
   a. 1/8 IN x 1 IN x 12 IN3 x 25 x 300 mm.
   b. Galvanized G90 Z275.
   c. Ends bent 90 DEG in opposing directions.
      1) Length of end prongs: 2 IN50 mm.

C. Horizontal Reinforcing:
   1. In interior walls:
      a. Cold drawn steel wire, mill galvanized, Class 3.
   2. In walls surrounding wet areas with humidity over 70 PCT:
      a. Type 304 stainless steel.
      b. Cold drawn steel wire, ASTM A82, hot-dip galvanized, ASTM A153, Class B2.
   3. In exterior walls:
      a. Type 304 stainless steel.
      b. Hot-dip Galvanized: ASTM A153 Class B2.
   4. Free standing, single-wythe CMU walls:
      a. Horizontal reinforcing composite:
         1) Width as required.
      b. Base Product: 220 Ladder Mesh by Hohmann & Barnard, Inc.
      c. Base Product: 120 Truss Mesh by Hohmann & Barnard, Inc.
      d. Horizontal reinforcing pattern for CMU back-up, with projecting wire loops to accommodate vertically adjustable veneer wire ties.
         1) Length of projection as required for cavity width indicated.
         2) Include compatible wire ties for masonry veneer.
      e. Interlock veneer anchor wire ties with the ladder/truss reinforcing.
         1) Base Product: 270 Ladder Adjustable Eye Wire by Hohmann & Barnard, Inc.
         2) Base Product: 170 Truss Adjustable Eye Wire by Hohmann & Barnard, Inc.
         3) Base Product: 180 Dub'l Loop Lok Truss by Hohmann & Barnard, Inc.
         4) Eye and pintle or similar design which permits vertical movement while restraining lateral movement
         5) Ties to allow for vertical adjustability during and movement after installation
         6) Eye Wire:
            a) Type 304 stainless steel
            b) Hot-dipped Galvanized: ASTM A153 Class B2.
            c) Diameter: 3/16 IN5 mm.
            d) Diameter: 1/4 IN6 mm.

5. Horizontal Reinforcing – Masonry Veneers:
    a. Single, continuous wire.
    b. Diameter: 3/16 IN5 mm.
    c. Diameter: 9 GA2.9 mm.
6. Tie/Reinforcing Clip:
    a. Base Product: Seismiclip 187 and/or 250 by Hohmann & Barnard, Inc.
    b. Extruded, impact resistant rigid PVC with grooves which lock the horizontal reinforcing and the wire ties together.
    c. Sized to fit continuous Wire and Wire Ties.

D. Vertical Reinforcing:
1. Reinforcing Bars:
    a. Grade 60 carbon steel.
    b. Size: No. 4 bars minimum, or as indicated.
    c. Refer to Structural Drawings.

E. Miscellaneous Anchorages:
1. Include miscellaneous anchorages as required or indicated to secure stone, architectural precast concrete copings, and sills and like components.
2. Type:
    a. As indicated.
    b. Base Product: ___ by ___
3. Material: Same as indicated for veneer anchors above.

F. Through Wall Flashing System:
1. Flexible Membrane Flashing:
    a. Reinforced self-adhering polyester scrim with ketone ethylene ester plasticizer.
    b. Thickness: 40 MIL1
    c. Width as required.
    d. Factory precut wherever possible.
    e. Base Product: Flex-Flash by Hohmann & Barnard, Inc.
    f. Corners and end dams:
        1) 26 GA type 304 stainless steel
        2) Provide at ends of runs, inside and outside corners.
        3) Base Product: Corners & End Dams by Hohmann & Barnard, Inc.
2. Flexible Stainless Steel Flashing:
    a. Polymeric fabric laminated to type 304 or 316 stainless steel.
    b. Membrane Thickness: 40 MIL1 mm.
    c. Stainless Steel Thickness: 3 MIL.07 mm.
    d. Width as required.
    e. Non-asphaltic adhesive.
    f. Termination bar.
    g. Base Product: Mighty-Flash SA by Hohmann & Barnard, Inc.
    h. Corners and end dams:
        1) 26 GA type 304 stainless steel.
        2) Provide at ends of runs, inside and outside corners.
        3) Base Product: Corners & End Dams by Hohmann & Barnard, Inc.
3. Stainless Steel Flashing:
    a. Custom fabricate to profiles indicated.
    b. 24 GA0.635 type 304 stainless steel sheet with end drip projecting 1/4 to 3/8 IN 6 to 9.5 mm beyond masonry.
    c. Corner and end dams:
        1) 26 GA0.475 mm type 304 stainless steel.
        2) Provide at ends of runs, inside and outside corners.
        3) Base Product: Corners & End Dams by Hohmann & Barnard, Inc.
    d. Termination Bar:
        1) Use to secure top edge of stainless steel flashing to back-up wall.

2) Stainless steel.
3) Base Product: T2 by Hohmann & Barnard, Inc.

e. Flashing Adhesive:
1) As recommended by manufacturer for bedding, sealing laps, and sealing to vertical surfaces.

4. Flexible Membrane Flashing:
a. 3 OZ0.13 mm copper foil laminated to polyethylene film.
b. Self-adhering.
c. Width as required.
d. Factory precut wherever possible.
e. Base Product: Copper-Fabric SA by Hohmann & Barnard, Inc.
f. Corners and end dams:
1) Copper.
2) Provide at ends of runs, inside and outside corners.
3) Base Product: Corners & End Dams by Hohmann & Barnard, Inc.

5. Cavity Wall Flashing/Drainage System:
a. Base Product: Flash-Vent SA by York Flashings.
b. Flashing: Flexible stainless steel with polymer fabric laminated to back face.
1) Mortar deflection device/weep vent: Full width, non-woven drainage fabric laminated to front face.
c. Width as required.
d. Non-asphaltic adhesive.
e. Termination bar.
f. Anchors.
g. Provide with end dams at ends of runs and inside and outside corner boots.

6. Stainless Steel Drip Plate:
a. Base Product: DP-FTSA by Hohmann & Barnard, Inc.
b. Base Product: DP-FTSA-LB by Hohmann & Barnard, Inc.
c. Base Product: DP-FTSA and/or DP-FTSA-LB by Hohmann & Barnard, Inc.
d. Type 304 stainless steel sheet with end drip projecting 1/4 to 3/8 IN 6 mm x 9.5 mm beyond masonry.
e. Thickness: 24 GA0.635 mm.
f. Foam Seal, 1/8 IN 3 mm thick, on bottom side.
g. Self-adhesive top surface.
h. Size and profiles as indicated.
1) Provide special profiles where lipped brick are indicated.

7. Termination Bar:
a. Base Product: TB-100 Series by Trufast, LLC
b. Use to secure top edge of Flexible Membrane flashing to back-up wall.
c. Stainless steel or rigid plastic.
d. 1/8 IN x 1 IN x 10 FT3 mm x 25 mm x 3 m.

8. Flashing Adhesive:
a. As recommended by manufacturer for bedding, sealing laps, and sealing to vertical surfaces.

G. Single Wythe Wall Flashing:
1. Polypropylene sloped flashing pans sized to fit in standard block cells from 150 to 300 mm 6 to 12 IN thickness.
2. Integrated perimeter flanges and weep spout for each cell.
3. Bridge connector between cells.
4. 7 IN x 14 IN 178 x 355 mm open weave polyester drainage mat for each cell.
5. Base:
a. BlockFlash by MortarNet

H. Cavity Vents and Weeps:
1. Head Vent:

a. Base Product: QV – Quadro-Vent by Hohmann & Barnard, Inc.
b. Polypropylene honeycomb vent/weep for head joints
c. Provides ventilation of cavity and weeping of cavity moisture while restricting ingress of insects and debris.
d. Standard size: 3/8 x 2-1/2 x 3-3/8 IN 9.5 x 64 x 86 mm.
e. Color: Gray
f. Color: Black
g. Color: Clear
h. Color: Almond
i. Color: Buff
j. Color: Cocoa
k. Color: White

2. Head and Weep Vents:
   a. Base Product: Williams-Goodco Brick Vent by Williams Products, Inc.
   b. Polyvinyl chloride (PVC) vent/weep for head joints.
   c. Provides ventilation of cavity and weeping of cavity moisture while impeding ingress of insects, debris and rodents.
   d. Size: Match brick height.
   e. Color: As selected by Architect from manufacturer's submitted full palate.
   f. Rope Weeps:
      1) Field cut cotton sash cord, nominal 3/8 IN 9.5 mm.
      2) Use in combination with Head Vent, where indicated.

I. Weep Tubes:
   1. PVC tube, 3/8 IN9.5 mm diameter.
   2. Base Product: 341 by Hohmann & Barnard, Inc.

J. Rope Wicks:
   1. Field- fabricated cotton sash cord.
   2. Nominal diameter: 3/8 IN9.5 mm.

K. Cavity Protection Materials:
   1. Base Product: Mortar Net.
   2. Non-directional nylon or polyester fiber:
   3. Mortar Net contributes to LEED Credits MR 4.1 and 4.2, Recycled Content.Add for LEED project. Polyester for 2 IN material and nylon for thinner.Fabricated from 20 PCT post-consumer recycled polyester.
   4. Fabricated from 40 PCT pre-consumer recycled nylon and 60 PCT virgin nylon.
   5. Thickness:
      a. 2.0 IN50 mm.
      b. 1.0 IN25 mm.
      c. 0.4 IN10 mm.
      d. Provide thickness to fill cavity.
   6. Height: 10 IN250 mm high.

L. Cavity Wall Baffles:
   1. For use in compartmentalization of cavity in rainscreen applications.
   2. Cross linked, closed cell, ethylene/vinyl/acetate foam.
   3. Style: Standard and optional design.
   4. Color: Black.
   5. Color: Gray.
   6. Adhesive: As recommended by manufacturer.
   7. Base Product: Everlastic EVA-200G by Williams Products, Inc.

M. Bond Breaker Strips:
   1. Asphalt saturated felt, unperforated; Type 1.

N. Pre-Molded Control Joint Strips at control joints in CMU walls:

1. Solid rubber strips with a Shore A, durometer hardness of 60 to 80.
2. Size and configuration as indicated.
   a. Design to fit standard sash block and maintain lateral stability in masonry wall.
   b. Use symmetrical design for intermediate control joints, and asymmetrical design (Tee-configuration) where CMU wall abuts or intersects a perpendicular element.
3. Do not bridge control joints with horizontal ladder/truss:
   a. Install 2 smooth dowels or other approved device across control joints which resist shear loads and allow expansion, contraction, and linear movements.
4. Base Product:
   a. Sash block: RS-Standard by H&B.
   b. Additional applications: RS-8 or RS-12 as appropriate for wall thickness.

O. Galvanizing Repair Paint:
1. Zinc rich paint for re-galvanizing welds and abrasions in galvanized steel.
2. Base Product: ZRC Galvilite by ZRC Worldwide.
3. Optional: Organic Zinc Coating 90-93 by Tnemec.

P. Compressible Filler:
1. Closed cell neoprene sponge
2. Thickness: 1/4 IN6 mm.
3. Thickness: 3/8 IN9.5 mm.
4. Base Product: NS by Hohmann & Barnard, Inc.

## PART 3 - EXECUTION

### 3.1 INSTALLATION

A. Keep vertical joint behind weeps free of mortar.

B. Comply with provisions of ACI 530 and ACI 530.1, except where exceeded by requirements of the contract documents.

C. Anchoring Masonry Veneers to Back-up:
1. Attach offset anchor straps to back-up wall.
   a. Use types suitable for condition.
   b. Apply flexible membrane flashing to walls prior to attachment of strap anchor.
   c. Where masonry walls bypass concrete or steel structural elements including shear walls, columns, and spandrel beams, anchor thereto with specialized anchors types indicated.
2. Select wire ties of length to span cavity and provide a minimum embedment of 2 IN 50 mm in masonry facing.
   a. Where cavity width exceeds 4-1/2 IN 114 mm, increase wire ties to 1/4 IN 6 mm diameter.
3. Provide minimum of one anchor per 1.77 SQFT 0.16 m2 of wall area with vertical and horizontal spacing not to exceed 16 IN 400 mm OC.
   a. Where stud spacing is less than 16 IN 400 mm OC, stagger ties in alternating courses.
4. Where 2 IN 50 mm thick masonry facing units are used as furring against columns or walls, anchor furring units to backing with adjustable metal ties designed for condition.

D. Anchor CMU walls to building structure and intersecting CMU walls.

E. Provide specialized anchors types where masonry walls abut concrete or steel structural elements including shear walls, columns, and spandrel beams.

F. Where bearing walls meet or intersect erect walls separately and anchor together with rigid steel anchors spaced not more than 24 IN 600 mm apart vertically.
1. Embed end bends of anchors in cores of masonry units filled with mortar or grout.

G. Where non-bearing walls meet or intersect other walls, erect walls separately and anchor together with wire mesh ties spaced not more than 16 IN 400 mm apart vertically.
   1. Embed ties centered in mortar within joint.

H. Fill solid with mortar or grout masonry unit cells within vertical planes of anchors, or use solid masonry units above and below anchors.

I. Dovetail slots provided by Section 04 05 21.

J. Dovetail Anchors:
   1. Coordinate anchor type to permit vertical differential movement and resist movement perpendicular to wall plane.
   2. Provide dovetail anchors in cast-in-place concrete at locations including but not limited to:
      a. Concrete Shear walls
      b. Concrete Columns
      c. Concrete Spandrel Beams
      d. Intersection of CMU walls and concrete walls
      e. Intersection of CMU walls and concrete columns or structural elements
      f. Elements where indicated.
   3. Masonry Veneer Spacing:
      a. Provide minimum of one anchor per 1.77 SQFT0.16 $m^2$ of veneer wall area with vertical and horizontal spacing at 16 IN 400 mm OC maximum.
   4. Horizontal Spacing of slots:
      a. Concrete Walls and Spandrel Beams:
         1) Locate at 16 IN 400 mm on center maximum.
         2) Start first vertical row 4 IN 100 mm of external corners.
         3) Start first vertical row 8 IN 200 mm of internal corners.
      b. Concrete Columns:
         1) Column width less than 24 IN 600 mm: Locate vertical row 6 IN 150 mm from each corner.
         2) Column width greater than 24 IN 600 mm: Locate vertical row 6 IN 150 mm from each corner.
   5. Vertical Positioning of Slots:
      a. Terminate bottom and top edges of dovetail slots 4 IN 100 mm from sills, heads, lintels, parapets, shelf angles, through-wall flashing and similar horizontal elements.
   6. Edge Condition Spacing:
      a. Locate horizontally 8 IN 200 mm from corners, control joints, expansion joints, jambs of doors, jambs of windows, and other similar edges of masonry veneer walls.

K. Reinforcing for CMU Walls:
   1. See Section 04 22 00.

L. Through-Wall Flashing:
   1. Install to provide positive drainage of cavity moisture.
   2. Coordinate with built in items and brick ledges.
   3. Drip Plate:
      a. Adhere to ledge angle or brick ledge with drip flange extending past face of masonry.
   4. Flashing membrane:
      a. Extend bottom edge of flashing to face of wall.
      b. Lap and bond flashing ends minimum 6 IN 150 mm.
      c. Extend top edge of flashing membrane up face of wall minimum 6 IN 150 mm above the top of Cavity Protection.
      d. Extend top edge of flashing membrane up face of wall minimum 8 IN 200 mm.
   5. Flashing membrane:
      a. Extend bottom edge of flashing over top surface of drip plate.
         1) Terminate rubberized flashing membranes 1/2 IN 13 mm from exterior face of wall.
         2) Bond flashing to drip plate.

3) Lap and bond flashing ends minimum 6 IN 150 mm.
b. Extend top edge of flashing membrane up face of wall minimum 8 IN 200 mm or 6 IN 150 mm above the top of Cavity Protection.
6. Termination bar:
a. Metal stud with gypsum sheathing:
1) Bond flashing membrane directly to face of sheathing.
2) Mechanically secure top edge with termination bar.
3) Lap air retarder 6 IN 150 mm over flashing membrane.
b. Masonry:
1) Install upper edge of flashing using a termination bar.
2) Reglet may be used in lieu of termination bar.
c. Cast-in-place concrete:
1) Secure upper edge of flashing with termination bar.
2) Reglet may be used in lieu of termination bar.
d. Caulk top edge of termination bar to wall.
e. Provide end dams.
7. Seal gap below ledge angles with backer and sealant.
8. Seal gap below relieving angles with compressible filler.
9. Seal items penetrating through-wall flashing system.
10. Verify compatibility of sealants with membranes, adhesives, and flashing.
11. End Dams:
a. Configuration:
1) Extend ends of flashing beyond openings.
2) Return flashing up into head joints.
3) Bond to face of masonry units.
4) Install sill after end dam is in place.
5) Minimum height at sides: 4 IN100 mm.
6) Comply with BIA Tech Note 21B and 7.
b. Provide end dams at following locations:
1) Jamb edges of sills for doors, windows, louvers, and similar openings.
2) Jamb edges of lintels for doors, windows, louvers and similar openings.
3) Step flashing where flashing follows grade.
4) Terminal ends of masonry veneer walls.
12. Head Vents and Rope Wick combination:
a. Rope Wicks:
1) Minimum Length: 16 IN400 mm.
2) Set outer end of ropes flush with exposed face of masonry veneer.
3) Loose-lay inner end of ropes at bottom of cavity, running parallel to back face of masonry veneer.
4) Leave rope wicks in place after mortar has set.
b. Locations:
1) Base of brick masonry cavity wall and through-wall flashings:
a) Rope Wicks:
(1) Locate in first brick course above through-wall flashing at base of wall.
(2) Space 16 IN 400 mm O.C. horizontally.
b) Head Vent:
(1) Locate in second brick course above through wall flashing at base of wall.
(2) Install head vent at 24 IN 600 mm O.C. horizontally.
2) Brick masonry cavity walls at shelf angles and through-wall flashing:
a) Rope Wicks:
(1) Locate in first brick course above shelf angle and through-wall flashing.
(2) Space 16 IN 400 mm apart horizontally.
b) Head Vent:
(1) Locations:

(a) Locate in second brick course above shelf angle and through-wall flashing.
(b) Locate in third brick course below shelf angle and through-wall flashing:
(2) Install head vent at 24 IN 600 mm apart horizontally.
(3) Align head vents installed above and below shelf angle and through-wall flashing with each other.

3) Brick masonry cavity walls at continuous lintel angles and through-wall flashing:
a) Rope Wicks:
(1) Locate in first brick course above continuous lintel angle and through-wall flashing.
(2) Space 16 IN 400 mm apart horizontally.
b) Head Vent:
(1) Locate in second brick course above continuous lintel angle and through-wall flashing.
(2) Install head vent at 24 IN 600 mm apart horizontally.

4) Brick masonry joints at top of brick cavity wall:
a) Head Vent:
(1) Locate in second brick course below coping and through-wall flashing, or metal cap flashing.
(2) Install head vent at 24 IN 600 mm apart horizontally.

M. Weep Tubes:
1. Spacing: 16 IN400 mm apart horizontally.

N. Rope Wicks:
1. Minimum Length: 16 IN400 mm.
2. 16 IN400 mm apart horizontally.
3. Set outer end of ropes approximately flush with exposed face of masonry veneer.
4. Loose-lay inner end of ropes at bottom of cavity, running parallel to back face of masonry veneer.
5. Leave rope wicks in place after mortar has set.

O. Cavity Protection Material:
1. Install per manufacturer's recommendations at ledge angles and bottom of wall.

P. Galvanizing Repair Paint:
1. Apply at welds of galvanized masonry accessories or where galvanic coating is missing or damaged.

## END OF SECTION

This page intentionally left blank.

# SECTION 04 22 00
CONCRETE MASONRY (CMU)

## PART 1 - GENERAL

### 1.1 SUMMARY

A. Furnish labor, materials, tools, equipment, and services for Concrete Masonry (CMU), as indicated, in accordance with provisions of Contract Documents.

B. Completely coordinate with work of other trades.

### 1.2 RELATED SECTIONS

A. Division 1

B. Section 03 30 00 Cast-In Place Concrete

C. Section 03 35 00 Concrete Finishing

D. Section 05 41 00 Structural Metal Stud Framing

E. Section 05 50 10 Miscellaneous Specialties

F. Section 06 11 00 Wood Framing

G. Section 07 92 00 Joint Sealants

H. Section 08 50 13 Aluminum Windows

I. Section 09 91 23 Interior Painting

J. Division 22 Plumbing

K. Division 23 Mechanical

L. Division 26 Electrical

### 1.3 REFERENCE STANDARDS

A. ASTM International:
   1. ASTM E336, Standard Test Method for Measurement of Airborne Sound Attenuation Between Rooms in Buildings.

B. Canada Green Building Council (CaGBC).

C. CSA Group (CSA):
   1. CAN/CSA-A165 Series, CSA Standards on Concrete Masonry Units [consists: A165.1, A165.2, A165.3].
   2. CAN/CSA-A371, Masonry Construction for Buildings.
   3. CSA S304.1, Design of Masonry Structures.

D. National Research Council Canada (NRC).

E. National Building Code of Canada (NBC).

F. South Coast Air Quality Management District (SCAQMD).

G. SCAQMD Rule 1168-[05], Adhesive and Sealant Applications.

H. Underwriters Laboratories of Canada (ULC).
   1. CAN/ULC-S101, Standard Methods of Fire Endurance Tests of Building Construction and Materials.

## 1.4 QUALITY ASSURANCE

A. Conform with the following for the Work of this Section:
   1. CAN/CSA A165.1 Series – 14.
   2. CAN/CSA A371-04

B. Test results [including sand gradation tests in accordance with CAN/CSA-A179] performed to qualify materials and establish mix designs.

C. Mock-up:
   1. Use materials and procedures accepted for the work.
   2. Minimum sample panel size is 4 FT 1.2 M square.
   3. Acceptable standard for the work is established by accepted sample panel.
   4. Retain sample panel at site until Work has been completed.
   5. Include a grouting demonstration panel if grouting operations planned exceed or vary from limitations set forth in ACI 530.1-05 - Section 3.5

D. LEED Requirements:
   1. Refer to Section 01 81 13, LEED v2009 Requirements, for additional performance requirements that may apply to products specified in this section.
   2. Refer to Section 01 81 14, LEED v4 Requirements, for additional performance requirements that may apply to products specified in this section.
   3. Refer to Section 01 81 16, LEED HC v2009 Requirements, for additional performance requirements that may apply to products specified in this section.
   4. Refer to Section 01 81 17, LEED HC v4 Requirements, for additional performance requirements that may apply to products specified in this section.

## 1.5 SUBMITTALS

A. Product Data:
   1. Certification of level of fire resistance provided by units used in fire rated walls.
   2. Manufacturer’s standard data sheet for each type of concrete masonry unit proposed, including product characteristics, physical size, performance criteria, finish, and limitations.
   3. Sustainable Design Submittals:
   4. LEED submittals: in accordance with [Section 01 35 21 - LEED Requirements].
   5. Construction Waste Management:
   6. Submit project [Waste Management Plan] [Waste Reduction Workplan] highlighting recycling and salvage requirements.
   7. Submit calculations on end-of-project recycling rates, salvage rates, and landfill rates demonstrating that [50] [75]% of construction wastes were recycled or salvaged.
   8. Recycled Content:
   9. Submit listing of recycled content products used, including details of required percentages or recycled content materials and products, showing their costs and percentages of [post-consumer] [and] [post-industrial] content, and total cost of materials for project.
   10. Regional Materials: submit evidence that project incorporates required percentage [_____]% of regional materials and products, showing their cost, distance from project to furthest site of extraction or manufacture, and total cost of materials for project.

## 1.6 DELIVERY, STORAGE AND HANDLING

A. Deliver, store and handle materials in accordance with Section 01 61 00 - Common Product Requirements and with manufacturer's written instructions.

B. Delivery and Acceptance Requirements: deliver materials to site in original factory packaging, labelled with manufacturer's name and address.
   1. Offload concrete unit masonry packages using equipment that will not damage the surfaces.
   2. Do not use brick tongs to move or handle masonry.

C. Storage and Handling Requirements:

1. Store materials off ground indoors in dry location and in accordance with manufacturer's recommendations in clean, dry, well-ventilated area.
2. Do not double stack cubes of concrete unit masonry.
3. Cover masonry units with non-staining waterproof membrane covering.
4. Allow air circulation around units.
5. Installation of wet or stained masonry units is prohibited.
6. Keep concrete unit masonry in individual cardboard packaging provided by manufacturer until units are ready to be installed.
7. Store and protect [concrete unit masonry] from [nicks, scratches, and blemishes].
8. Replace defective or damaged materials with new.

D. Develop Construction Waste Management Plan Waste Reduction Workplan related to Work of this Section and in accordance with Section [01 35 21 - LEED Requirements].

E. Packaging Waste Management: remove for reuse and return by manufacturer of pallets, crates, padding, and packaging materials as specified in Construction Waste Management Plan Waste Reduction Workplan in accordance with Section 01 74 19 - Waste Management and Disposal and Section 01 35 21 - LEED Requirements.

## PART 2 - PRODUCTS

### 2.1 GENERAL

A. Units to be used in fire resistive wall assemblies:
   1. Where units are used in assemblies with fire resistive rating:
      a. Provide units with aggregate type, and equivalent thickness that yield fire-resistances indicated for each wall assemblies.
      b. Acceptable calculation methodologies for determining equivalent thickness:
         1) ASTM C140.
         2) NCMA TEK 7-1B.
         3) ACI 216.1 / TMS 0216.
         4) ASTM E119.
   2. Provide solid units, or grouted hollow units, under lintels.
   3. Provide matching concrete bricks as required.
   4. Do not use chipped, cracked, spalled units exposed in finish work.
   5. Provide reinforced concrete masonry lintels fabricated from precast or site cast load bearing masonry units, filled, and reinforced as indicated.

### 2.2 CONCRETE MASONRY UNITS - GENERAL PURPOSE

A. Concrete Masonry Units (CMU):
   1. Modular units complying with CAN/CSA A165.1 Series-14.
   2. Include shapes, such as end, bond, sash groove, ledge and lintel units as required to complete work indicated.
      a. Provide open end blocks where vertical reinforcing required.
      b. Provide knock-out blocks where horizontal reinforcing required.
      c. Solid concrete masonry units may be used where grouted block is required, if reinforcing is not indicated, in lieu of grouted solid installation method.
   3. Size:
      a. 8 IN D x 8 IN H x 16 IN W 190x190x390 mm standard concrete block, running bond, interior.
      b. 190x190x390 mm fire rated concrete block, running bond, mechanical room.
      c. Other sizes as indicated or required to suit construction.
   4. Normal Weight Units:
      a. Hollow Units: H/20/A/M.
      b. Solid Units: S/F/20/A/M.
      c. Colour: Grey.

B. Corner Units:
   1. Exposed to view: Use bullnose units at external corners and jambs of openings.
   2. Not Exposed to view: Square-nosed units may be used where corners will not be visible in completed wall.

C. Corner Units:
   1. Use square-nosed units at external corners and at jambs of openings.

## 2.3 DECORATIVE CONCRETE MASONRY UNITS

A. Decorative Concrete Masonry Units (DCMU):
   1. Units complying with ASTM C90.
   2. Unit Compressive Strength (average net-area compressive strength): 1900 PSI13.1 MPa.
   3. Unit Compressive Strength (average net-area compressive strength): 2150 PSI14.8 MPa.
   4. Unit Compressive Strength (average net-area compressive strength): 2800 PSI19.3 MPa.
   5. Unit Compressive Strength (average net-area compressive strength): 3050 PSI21.0 MPa.
   6. Weight Classification: Normal weight.
   7. Weight Classification: Medium weight.
   8. Weight Classification: Lightweight.
   9. Unit Size (LxWxH):
      a. 200 mm half height.
      b. 90x190x 390 mm stack bond, building exterior.
      c. __ IN mm x __ IN mm x __ IN mm (actual).
      d. __ IN mm x __ IN mm x __ IN mm (nominal).
      e. __ IN mm x __ IN mm x __ IN mm (nominal).
   10. Unit Size (LxWxH): Manufactured to dimensions indicated on Drawings.
   11. Pattern and Texture:
      a. Smooth Face (standard texture).
      b. Ground-face.
      c. Split-face.
      d. Split-ribbed.
      e. Vertically-scored at mid point of face with false head joint (used to mimic stack bond appearance even though units are truly laid in running bond.)
      f. Vertically-triple-scored at third points of face with false head joints (used to mimic stacked bond soldier course appearance even though units are truly laid in running bond.)
   12. Color:
      a. Standard grey.
      b. Glacier White.
   13. Finish: Clear sealant, matte finish, water repellant, anti-graffitti.
      a. Acceptable product: Fabrishield PR Series.
      b. Matching _____ as produced by _____.
      c. As indicated by manufacturer's designations.
      d. Match Architect's samples.
      e. As selected by Architect from manufacturer's full range.
   14. Special Aggregate:
      a. Aggregate colors and sizes as necessary to produce color and texture of Base Product.
      b. Aggregate colors and sizes as necessary to produce color and texture of Architect’s sample.
   15. Base Product: _____ by _____.

## 2.4 CONCRETE LINTELS AND SILLS

A. General:
   1. Fabricate concrete lintels and sills in plant or site cast.
   2. Use concrete having minimum 28 day compressive strength of 3000 PSI .
   3. Exposed surfaces to have surface texture and color to match adjacent concrete masonry units.

4. Fabricate lintels to modular sizes to match coursing.
5. Mark tops of lintels with lintel schedule number.

B. Fabricate lintels by one of following methods:
1. Use masonry lintel units and reinforced concrete fill.
2. Cast lintels monolithically with reinforcement.
3. Provide vertical dummy joints matching pattern of vertical joints and scoring in concrete masonry walls in which installed.

C. Requirements indicated by Structural Documents supersede the requirements above.

## 2.5 REINFORCING

A. Horizontal Reinforcing products including wire ladder truss: Specified in Section 04 05 23.

B. Reinforcing Bars (vertical and horizontal): Specified in Section 04 05 23.

## 2.6 ACCESSORY ITEMS

A. Masonry Accessories: See Section 04 05 23.

B. Mortar and Grout: See Section 04 05 13.

C. Firestopping: See Section 07 84 00 for rated wall penetrations.

D. Sealants: See Section 07 92 13 and Section 07 92 16 for non-rated wall penetrations.

E. Grout Fill: See Section 04 05 13.

F. Concrete Fill:
1. See Section 03 31 00.
2. Minimum compressive strength, 4000 PSI 27.6 MPa.
3. Minimum compressive strength, 3000 PSI 20.7 MPa.
4. Maximum size of coarse aggregate, 3/8 IN 9.5 mm.

G. Vermin Treatment: Boric acid powder.

H. Metal Faced Concrete Masonry Units:
1. Concrete masonry units:
   a. Conform to ASTM C90 Class 1, normal weight.
2. Metal embedments:
   a. 7 GA steel plates, commercial quality.
   b. Conform to ASTM A36/A36M.
3. Configurations:
   a. 881E: 8 IN x 8 IN200 x 200 mm metal plate in one end face only.
   b. 881F: 8 IN x 8 IN200 x 200 mm metal plate in one side face only.
   c. 8161F: 8 IN x 16 IN200 x 400 mm metal plate in one side face only.
   d. 882F: 8 IN x 8 IN200 x 200 mm metal plates in two side faces.
   e. 8162F: 8 IN x 16 IN200 x 400 mm metal plates in two side faces.
   f. 882F1E: 8 IN x 8 IN200 x 200 mm metal plates in two side faces and one end face (bull nose).
   g. 8162F1E: 8 IN x 16 IN200 x 400 mm metal plates on two side faces and one end face (bull nose).
   h. 8162FBB Bond Beam: 8 IN x 8 IN200 x 200 mm metal plates in one or two side faces.
   i. 8162FBB Bond Beam: 8162F: 8 IN x 16 IN200 x 400 mm metal plates in one or two side faces.
   j. 8161 FTP Toilet Tissue Holder: 8 IN x 16 IN200 x 400 mm metal plate with recess in one face.
4. Base: M/BED Block Systems, LLC.

## PART 3 - EXECUTION

### 3.1 INSPECTION

A. Verify suitability of substrate to accept work.

B. Verify that anchors and flashings are correct.

C. Installation constitutes acceptance of substrate and responsibility for performance.

### 3.2 INSTALLATION

A. General:
1. Comply with provisions of CSA A371-04, except where exceeded by requirements of Contract Documents.
2. Perform cutting with masonry saws.
3. Cut as required to provide pattern indicated.
4. Use solid units where cutting or laying would expose holes.
5. Do not install damaged units.
6. Do not wet concrete masonry units.
7. Avoid use of less than half size units.
8. Build chases and recesses as indicated and required for work of other trades.

B. Install in running bond unless otherwise indicated.

C. Install in stack bond.

### 3.3 FIRE AND SMOKE WALL IDENTIFICATION

A. Identify walls indicated on Drawings as having a required fire or smoke rating.
1. Permanently identify rating and type of barrier with stencil and paint in contrasting, 3 IN high letters in a manner acceptable to authority having jurisdiction.
2. Text for fire and smoke barriers: "X HOUR FIRE AND/OR SMOKE BARRIER—PROTECT ALL OPENINGS".

B. Elevator Door Frames:
1. Block-out as required by Elevator Manufacturer to allow for door frames to be set.
2. After door frames have been set, fill in with like construction and grout cores solid.

### 3.4 LAYING AND TOOLING

A. Lay out walls in advance for uniform and accurate spacing of bond patterns and joints.

B. Properly locate openings, movement joints and offsets.

C. Lay masonry units with face shells of bed joints fully mortared.
1. Mortar webs in courses of piers, columns, and pilasters, in starting course on foundations and when necessary to confine grout or loose filled insulation.
2. Mortar head joints a minimum distance from each face equal to face shell thickness.
3. Align vertical cells and maintain openings unobstructed to be grouted.

D. Maintain nominal 3/8 IN 9.5 mm joint widths.
1. Cut joints flush where [concealed] [wall tile applied].
2. [Concave][Tool] exposed joints, typical except for above.

E. Enlarge voids or holes, except weep holes, and fill with mortar during tooling.

F. Point up joints at corners, openings and adjacent work to provide neat, uniform appearance.

G. Remove masonry disturbed after laying.
1. Clean and relay in fresh mortar.
2. Do not pound units to fit.
3. If adjustments are required, remove units, clean, and reset in fresh mortar.

H. Where work is stopped and later resumed, rake back 1/2 masonry unit length in each course; do not tooth.
   1. Remove loose units and mortar prior to laying fresh masonry.

I. Build in items indicated and specified.
   1. Fill with mortar around built-in items.
   2. Grout fill space between metal frames and masonry.
   3. Where built-in items are to be embedded in cores of hollow masonry units, place layer of metal lath in joint below and fill core with grout.

J. Vermin Treatment: Place a minimum of 1 IN 25 mm boric acid powder in cells of first course of interior masonry walls at Vivarium.

## 3.5 REINFORCING

A. General:
   1. In addition to the following general requirements, provide reinforcing size type and spacing as indicated on Drawings and Details.
   2. Requirements indicated in Structural Documents supersede the requirements of this section in the event of a conflict.

B. General Reinforcing Requirements:
   1. Reinforce masonry openings over12 IN 300 mm wide, where control and expansion joints are not provided, as per Structural Documents.
      a. Extend reinforcing minimum of 24 IN300 mm beyond jambs of opening.
   2. Embed horizontal reinforcing in bed joint mortar for entire length with minimum cover of 5/8 IN on exterior side of walls and1/2 IN 13 mm at other locations.
      a. Provide same minimum cover for other embedded items.
   3. Minimum laps for horizontal reinforcing: 24 IN 150 mm.
   4. Do not bridge Control Joints or Expansion Joints with horizontal reinforcing.
      a. Install smooth dowels or other approved device across Control Joints which resist shear loads but allow in-plane expansion, contraction, and linear shrinkage movements.

C. Horizontal Reinforcing (wire ladders/trusses):
   1. Provide continuous horizontal joint reinforcing concrete masonry walls.
   2. Unless otherwise indicated:
      a. Install horizontal reinforcing within8 IN 200 mm of first bed joint.
      b. Running Bonds: Install horizontal reinforcing at 16 IN 400 mm OC vertically thereafter.
   3. Make corners and wall intersections by use of prefabricated L and T sections.
      a. Cut and bend as required.
      b. Embed ends in concrete filled cores.

D. Vertical Reinforcing Bars at CMU Walls:
   1. Install vertical reinforcing bars as indicated on Structural drawings.

E. Horizontal Reinforcing at Anchored CMU Veneers:
   1. Install horizontal reinforcing where anchored CMU Veneers are indicated.
      a. Reinforcing materials and types: Specified in Section 04 05 23.
   2. Unless otherwise indicated:
      a. Install horizontal reinforcing within 8 IN 200 mm of first bed joint.
      b. Running Bonds: Install horizontal reinforcing at 16 IN 400 mm OC vertically thereafter.
      c. Stacked Bonds: Install reinforcing 8 IN 200 mm OC vertically thereafter where stack bond masonry is indicated.
      d. Make corners and wall intersections by use of prefabricated L and T sections.
      e. Cut and bend units as required.
      f. Coordinate veneer reinforcing with back-up wall type and material to provide required reinforcement.

3. Coordinate locations with Masonry Veneer Anchors specified in Section 04 05 23.

## 3.6 GROUT FILL

A. Do not place grout until entire portion of wall to be grouted has attained strength to resist grout pressure.

B. Use mechanical vibrator to remove voids and to consolidate fill.

C. Grout walls incrementally as CMU is placed.

D. Minimize lift heights to ensure walls remain safe and stable until grout has attained strength to resist overturning or collapse.
   1. Adequately brace.

E. Where vertical or horizontal reinforcing bars are required, place and inspect prior to filling operation.

F. Fill cores containing vertical reinforcing.

G. Fill cores.

H. Place in maximum 4 FT 1.2 mlifts.

I. Place in maximum 2 FT 0.60 m lifts.

J. Leave lifts minimum 1-1/2 IN 38 mm below top of course to form key with next lift.

## 3.7 CONCRETE FILL

A. Where vertical or horizontal reinforcing bars are required, place and inspect prior to filling operation.

B. Fill cores containing vertical reinforcing.

C. Fill all cores.

D. Fill cores in walls forming secure perimeter.

E. Place in maximum 4 FT 1.2 m lifts.

F. Place in maximum 2 FT 0.6 m lifts.

G. Leave lifts minimum 1-1/2 IN 38 mm below top of course to form key with next lift.

## 3.8 CONTROL JOINTS (CJ)

A. Provide control joints and other movement joints as indicated.

B. Where not indicated:
   1. Locate control joints at natural planes of weakness in masonry wall such as:
      a. Changes in wall height.
      b. Changes in wall thickness, such as at pipe and duct chases and pilasters.
      c. At (above) movement joints in foundations and floors on which wall is bearing.
      d. At (above) movement joints in roofs and floors that bear on wall.
      e. Within 8 IN 200 mm of one or both jambs of door, window, louver, and similar openings:
         1) Place CJ at one side of openings less than 6 FT1.8 m wide.
         2) Place CJ at both sides of openings greater than6 FT 1.8 m wide.
      f. Within 4 FT 1.2 m of corners on one leg, minimum.
         1) Opposing leg: No more than20 FT 6 m from corner.
      g. Intersections: Within 12 FT 3.6 m of wall intersections.
   2. In addition to the above, locate control joints at no more than the following maximum (horizontal) distances:
      a. Walls greater than 16 FT - 8 IN 5.1 mtall: No more than25 FT 7.6 mO.C.

b. Walls between 8 FT 2.4 mand 16 FT - 8 IN 5.1 m all: Not more than 1-1/2 times wall height.
c. Walls less than 8 FT 2.4 m tall:12 FT 3.6 m.

C. Installation/construction of control joints:
1. Utilize sash blocks or similar shapes which have slotted end to accept gaskets.
   a. Pre-molded Control Joint Strips: Specified in Section 04 05 23.
2. Cut ladder/truss type horizontal reinforcing as it crosses control joints.
3. Control Joints in walls which resist shear loads but allow in-plane expansion:
   a. Install 2 smooth dowels or other approved device across contraction and linear shrinkage movements.
   b. Embed 2 smooth dowels horizontally across joint.
      1) Size: #4 FTs x 24 IN 600 mm long.
      2) One end dowels to be greased or sleeved.
4. While mortar is still fresh, rake out mortar from joint, leaving a completely clean joint.
5. After wall has cured, install backer rod and sealant on both wall faces.
   a. Sealant and Backer Rod: Specified in Section 07 92 13 and Section 07 92 16.

## 3.9 LINTELS, FLASHING AND SEALANTS

A. Provide precast masonry lintels wherever openings more than12 IN 300 mm wide are indicated without other structural support or other supporting lintels.
1. Thoroughly cure lintels before handling and installation.
2. See lintel schedule for size and type required.

## 3.10 INSTALLATION TOLERANCES

A. Maximum variation from plumb in vertical lines and surfaces of columns, walls and arises:
1. 1/4 IN6 mm in 10 FT3 m.
2. 3/8 IN9 mm in a story height not over 20 FT6 m.

B. Maximum variation from plumb for external corners, control joints, expansion joints and other conspicuous lines:
1. 1/4 IN6 mm in any story or 20 FT6 m maximum.
2. 1/2 IN12 mm in 40 FT12 mor more.

C. Maximum variation from level of grades for exposed lintels, sills, parapets, horizontal grooves and other conspicuous lines:
1. 1/4 IN6 mm in any bay or 20 FT6 m.
2. 1/2 IN12 mm in 40 FT12 mor more.

D. Maximum variation from plan location of related portions of columns, walls and partitions:
1. 1/2 IN12 mm in any bay or 20 FT6 m.
2. 3/4 IN18 mm in40 FT 12 m or more.

E. Maximum variation in cross section of columns and thicknesses of walls from dimensions indicated:
1. Minus 1/4 IN6 mm.
2. Plus 1/2 IN12 mm.

## 3.11 REPAIR, POINTING AND CLEANING

A. Remove and replace loose, stained, or damaged units.
1. Provide new units to match.
2. Install in fresh mortar.
3. Point to eliminate evidence of replacement.

B. Clean in accordance with Section 04 05 10.

## 3.12 INSPECTION AND TESTING

A. Comply with the requirements of CAN/CSA A165.1 to provide evidence of testing.

B. The Owner will provide testing and inspection services. This does not relieve the contractor of the responsibility to furnish materials and construction in full compliance of contract documents.

## END OF SECTION

# SECTION 05 50 00
METAL FABRICATIONS

## PART 1 - GENERAL

### 1.1 SUMMARY

A. Furnish labor, materials, tools, equipment, and services for Miscellaneous Metal Fabrications, as indicated, in accordance with provisions of Contract Documents.

B. Completely coordinate with work of other trades.

### 1.2 QUALITY ASSURANCE

A. ASTM International (ASTM):
   1. ASTM A276 Standard Specification for Stainless Steel Bars and Shapes

B. American Welding Society (AWS):
   1. ANSI/AWS C1.1M/C1.1 Recommended Practices for Resistance Welding
   2. ANSI/AWS D1.1 Structural Welding Code - Steel.
   3. ANSI/AWS D1.3 Structural Welding Code - Sheet Steel.

C. National Association of Architectural Metals Manufacturers (NAAMM):
   1. Class 1, Architectural, per NAAMM AMP-555, Code of Standard Practice for the Architectural Industry.

### 1.3 SUBMITTALS

A. Shop Drawings:
   1. Plans and elevations showing members and connections.
   2. Anchors and accessory items.

## PART 2 - PRODUCTS

### 2.1 MATERIALS

A. Stainless Steel:
   1. ASTM A484 and ASTM A276.
   2. Concealed: Type 302 or Type 304.
   3. Exposed: Type 316.
      a. Finish: ASTM A480 AISI finish No. 4, unless otherwise indicated.

### 2.2 FABRICATION

A. Form to shapes indicated with straight lines, sharp angles, and smooth curves.

B. Shop fabricate in as large assemblies as practicable.

C. Anchorage Accessories:
   1. Items required securing wood to metal, wood to masonry, metals to masonry or concrete, metal to metal or metal to other items.

D. Drill or punch holes with smooth edges for temporary field connections and attachment of work by other trades.
   1. Conceal fastenings where practicable.

E. Make permanent shop and field connections with continuous fillet type welds.
   1. Grind exposed welds smooth.

F. Supply items required to complete construction and installation.

G. Meet requirements specified under Structural Steel for fabricating items of structural nature or use.

## PART 3 - EXECUTION

### 3.1 INSPECTION

A. Verify suitability of substrate to accept installation.

B. Installation constitutes acceptance of responsibility for performance.

C. Verify wall backing has been installed for wall-mounted items specified in this Section.
   1. See Section 09 22 16.

### 3.2 INSTALLATION

A. General:
   1. Set work level, true to line, plumb.
   2. Weld field connections and grind smooth.
   3. Conceal fastenings where practical.
   4. Secure metal to wood with lag screws of adequate size with appropriate washers.
   5. Secure metal to concrete with embedded anchors, setting compounds, caulking and sleeves, or setting grout.
      a. Use expansion bolts, toggle bolts, or screws for light duty service.
   6. Meet structural requirements for erecting items of structural nature.
   7. Do not field splice fabricated items unless size requires splicing.
   8. Weld splices.
   9. Provide fabricated items complete with attachment devices as required to install.

## END OF SECTION

# SECTION 07 92 16
INTERIOR JOINT SEALANTS

## PART 1 - GENERAL

### 1.1 DESCRIPTION

A. Definition:
   1. Words “calk” and “caulking” mean sealant work.
   2. “Interior wet areas” means toilets, showers, kitchens and similar areas where sealant is subject to moisture.

B. Seal joints which would otherwise permit penetration of moisture or air, unless sealant work is specifically required under other sections.

C. Work included: Provide sealants as follows:
   1. Joints at penetrations of walls, floors and decks by piping and other services and equipment not requiring firestopping.
   2. Between cabinets, casework, countertops and back splashes where adjacent to walls.
   3. Between cabinets / casework and flooring.
   4. Joints between dissimilar materials, to provide visually acceptable closures.
   5. Other joints where caulking, or sealant is indicated.

### 1.2 QUALITY ASSURANCE

A. Sealant materials:
   1. Sealant specification: ASTM-C920 Type S or M, Grade-NS, minimum Class-25.
   2. Sealant testing: ASTM-C510; ASTM-C711; ASTM-C719 Class-25, Grade-N; ASTM-C792; ASTM-C793; ASTM-C910.
   3. Sealant use: ASTM-C1193.
   4. Installer approved by manufacturer.

### 1.3 SUBMITTALS

A. Shop Drawings:
   1. Sealant Schedule with the following information:
      a. Generally describe locations requiring sealants (i.e. Brick to Alum Window).
      b. List type of sealant to be used, and name of product proposed.
      c. Include a blank column on schedule for colors.
      d. Upon review, Architect to complete Color Column.

B. Samples:
   1. Cured sample of each color for color selection (submit with Sealant Schedule).

C. Contract Closeout Information:
   1. Warranty.

### 1.4 JOB CONDITIONS

A. Environmental Limitations:
   1. Do not proceed with installation of joint sealants under following conditions:
      a. When ambient and substrate temperature conditions are outside limits permitted by joint sealant manufacturer or are below 40 DEGF.
      b. When joint substrates are wet.

B. Joint-Width Conditions:
   1. Do not proceed with installation of joint sealants where joint widths are less than those allowed by joint sealant manufacturer for applications indicated.

C. Apply only to joints free of material which may inhibit bond.

D. Apply to cementitious materials only when thoroughly cured and dry.

### 1.5 WARRANTY

A. Provide written warranty that sealant work will remain free of defects for a period of 2 years:
   1. Failure of water tightness constitutes defect.
   2. Remove defective work and materials and replace with new work and materials.
   3. Repair other work damaged as a result of defective sealant work at no additional expense to Owner.
   4. Warranty signed by Installer and/or Contractor.

## PART 2 - PRODUCTS

### 2.1 MATERIALS

A. Acceptable manufacturers:
   1. Polyurethane sealants:
      a. Base:
         1) Tremco.
      b. Optional:
         1) Sonneborn/ChemRex.
         2) Sika.
   2. Other manufacturers desiring approval comply with Section 00 21 13.

### 2.2 SEALANTS - GENERAL

A. General:
   1. Provide colors matching materials being sealed.
   2. Where sealant is not exposed to view, use manufacturer's standard color which has best performance.
   3. Use non-sag sealant in vertical and horizontal joints.
   4. Use self-leveling in horizontal joints.
   5. Before use of sealant, investigate its compatibility with surfaces, fillers and other materials in joint system.
   6. Use only compatible materials.
   7. Obtain sealants from manufacturers who will provide manufacturers' field service representatives at project site for purpose of advising and instructing installers.
      a. Provide such services, at no expense to Owner.

B. .Polyurethane Sealants:
   1. Refer to Sealant Selection Guide for types required.
   2. VOC content no greater than 250 g/L.

### 2.3 MISCELLANEOUS MATERIALS

A. Joint cleaner, primer, bond breaker:
   1. As recommended by sealant manufacturer.

B. Backer Rod:
   1. Rod stock of polyethylene, polyethylene jacketed polyurethane foam, or other flexible, non-absorbent, non-bituminous material recommended by sealant manufacturer to:
      a. Control joint depth.
      b. Break bond of sealant at bottom of joint.
      c. Provide proper shape of sealant.

# PART 3 - EXECUTION

## 3.1 SEALANT USAGE GUIDELINES

| Guide to Sealant Types - INTERIOR | | | | |
|---|---|---|---|---|
| **Location** | **Materials** | **Sealant Type** | **Base Product** | **Remarks / Exceptions** |
| Interior (General) | Window Sills / Stools | Product specified in Section 12 34 00 (100 PCT silicone by Color Rite) | | |
| | Cabinets and Casework to wall | | | |
| | Countertops and Backsplashes | | | |
| | Sinks in Countertops | | | |
| | Interior Alum Doors and Window Frame Perimeters | Multi-part Polyurethane, chemically curing, epoxidized | Tremco "Dymeric 240FC" | -- |
| | Hollow Metal Door and Window Frames | Siliconized Acrylic Latex (paintable) | Tremco "Tremflex 834 IN | Exception: Where sealant will not be subsequently painted, and white color will not be visually compatible with adjacent finishes: Use "Dymeric 240FC" of matching color. |
| | Acoustical Sealant Joints at top and bottom terminations of Interior Walls | Specified In Section 09 29 00 (and in Section 07 84 00 where fire-rated) | | |
| Interior Flatwork | Control Joints in Concrete Floors in Mechanical Rooms and other “un-finished” spaces | Multi-part Polyurethane | Tremco "THC 900 / 901 IN | Exception: Where subject to continual water emersion; use "Vulkem 45 or 245 IN |
| | Stone and Precast Flooring | | | |
| Interior Wet Areas | Porcelain, Ceramic Tile, Metals, and surfaces with Epoxy Paints | Silicone; Air cure | Tremco "Tremsil 200 IN | -- |

**General Notes:**
1. The above shall be use as a "guide" to selection of appropriate sealant types.
2. Optional sealant products shall offer same number of color choices as the Base Product listed.
3. All of the conditions and materials listed may not necessarily apply to subject project.
4. Not all project conditions may be addressed on above table; Refer also to other specification sections and install sealants where called for by other sections.
5. The above is intended to be an overall guide. Additional conditions and materials may be required on subject project. Notify Architect if additional Guidance is required to select unlisted items.
6. Materials and Conditions “conventionally” occur on Exterior but used on Interior of this project may not be listed on this Table. Refer to Exterior Guide (Section 07 92 13) for appropriate sealant type. i.e. If project calls for Brick Masonry on interior: Refer to Section 07 92 13 for type of Sealant to be used.

## 3.2 PREPARATION

A. Clean joints.

B. Where finish coating or covering is to be applied to surface (e.g., paint, wall covering, glazed coating), wait until such coating or covering has been applied before installing sealant.

## 3.3 INSTALLATION -GENERAL

A. General:
   1. Sealant Installation Standard: Comply with recommendations in ASTM C 1193 for use of joint sealants as applicable to materials, applications, and conditions indicated.
   2. Make joints water and air tight.
   3. Make depth of sealant not more than one-half width of joint, but in no case less than 1/4 IN.
   4. Install correctly sized backer rods.
   5. Apply bond breaker as required or recommended by sealant manufacturer.

B. Install sealant backings of kind indicated to support sealants during application and at position required to produce cross-sectional shapes and depths of installed sealants relative to joint widths that allow optimum sealant movement capability.
   1. Do not leave gaps between ends of sealant backings.
   2. Do not stretch, twist, puncture, or tear sealant backings.
   3. Remove absorbent sealant backings that have become wet before sealant application and replace them with dry materials.

C. Install bond-breaker tape behind sealants where sealant backings are not used between sealants and backs of joints.

D. Install sealants using proven techniques that comply with the following and at the same time backings are installed:
   1. Place sealants so they directly contact and fully wet joint substrates.
   2. Completely fill recesses in each joint configuration.
   3. Produce uniform, cross-sectional shapes and depths relative to joint widths that allow optimum sealant movement capability.

E. Prime joint surfaces as recommended by sealant manufacturer for conditions:
   1. Limit application to surfaces to receive sealants.
   2. Mask off adjacent surfaces.

F. Sub-caulk joints without suitable backstop, to proper depth.

G. Tool sealants using sufficient pressure to fill voids.

H. Upon completion, leave caulking smooth and even.

I. Clean off excess sealant or sealant smears adjacent to joints as the Work progresses by methods and with cleaning materials approved in writing by manufacturers of joint sealants and of products in which joints occur.

J. Hollow Metal Door Frames:
   1. Seal frames to wall.
   2. Seal frames to floor substrates and hard floor finishes (do not seal to previously installed carpet and similar finishes.)
   3. Seal hairline gaps where stops and rabbets of frame members intersect.

## END OF SECTION

# SECTION 09 22 16
NON-STRUCTURAL METAL FRAMING

## PART 1 - GENERAL

### 1.1 SUMMARY

A. Furnish labor, materials, tools, equipment, and services for Non-Structural Metal Framing in accordance with provisions of Contract Documents.

B. Completely coordinate with work of other trades.

### 1.2 QUALITY ASSURANCE

A. General:
   1. Manufacturer shall be a member of either Certified Steel Stud Association (CSSA), Steel Stud Manufacturers Association (SSMA) or Steel Framing Industry Association (SFIA).

B. Reference Standards:
   1. ASTM Reference Standards:
      a. ASTM C645: Standard Specification for Nonstructural Steel Framing Members.
      b. ASTM A653: Standard Specification for Steel Sheet, Zinc-Coated (Galvanized) or Zinc-Iron Alloy-Coated (Galvannealed) by the Hot-Dip Process.
      c. ASTM C754: Standard Specification for Installation of Steel Framing Members to Receive Screw-Attached Gypsum Panel Products.
      d. ASTM A1003: Standard Specification for Steel Sheet, Carbon, Metallic- and – Nonmetallic-Coated for Cold-Formed Framing Members.

C. Seismic Design: comply with Ontario Building Code, Section 4.1.8.17 and requirements of Authorities Having Jurisdiction.

### 1.3 SUBMITTALS

A. Product Data:
   1. Provide copies of manufacturer's specifications and installation instructions for each type of material and accessory required.
      a. Include data required to show specification compliance.

## PART 2 - PRODUCTS

### 2.1 SUPPORT SYSTEMS FOR GYPSUM CEILINGS/BULKHEADS

A. Stud-Framed Ceiling/Soffit Systems:
   1. C-shaped studs or joists; roll-formed from corrosion-resistant galvanized steel that conforms to ASTM C645.
   2. Galvanized Coating: ASTM A653, G40.
   3. Minimum Frame Member Depth: 3-5/8 IN minimum, unless otherwise indicated.
      a. Use wider stud sections if ceiling span and support requires.
   4. Minimum flange width: 1-1/4 IN.
   5. Minimum stud thickness: 33 MIL.
   6. Other items including suspension wire, tie wire, attachment devices: As specified and indicated.

B. Tie Wire:
   1. Material: ASTM A641, Class 1 zinc coating, soft temper.
   2. Minimum Diameter (single-strand): 62 mils (14 GA).

3. Minimum Diameter (double-strand): 42 mils (18 GA).

C. Wire Hangers:
1. Material: ASTM A641, Class 1 zinc coating, soft temper.
2. Minimum Diameter: 97 mils (12 GA).

D. Anchors in Concrete:
1. Anchors of type and material indicated below, with holes or loops for attaching hangers of type indicated and with capability to sustain, without failure, a load equal to 5 times that imposed by ceiling construction, as determined by testing per ASTM E488 or ASTM E1512 as applicable.
2. Acceptable types: Cast-in-place, post-installed expansion anchors and post-installed bonded anchors.
3. Material: Carbon-steel components zinc plated to comply with ASTM-B633, Class Fe/Zn 5 (0.005 MM) for Class SC 1 service condition.

## PART 3 - EXECUTION

### 3.1 INSPECTION

A. Examine supporting structure and conditions under which system will be installed.

B. Correct conditions detrimental to proper installation.

C. Installation constitutes acceptance of responsibility for performance.

### 3.2 INSTALLATION - GENERAL

A. General:
1. Layout and install metal framing accurate to dimensions indicated in drawings.
2. Installation Standard: ASTM C754, except comply with framing sizes and spacing indicated.
   a. Gypsum Board Assemblies: Comply with additional requirements in ASTM C840 relative to framing installation.
3. Install supplementary framing, and blocking to support fixtures, equipment services, heavy trim, grab bars, toilet accessories, furnishings, or similar construction.
4. Install bracing at terminations in assemblies.
5. Do not bridge building control and expansion joints with non-load-bearing steel framing members. Frame both sides of joints independently.
6. Where studs are installed directly against exterior masonry walls or dissimilar metals at exterior walls, install isolation strip between studs and exterior wall.
7. Extend framing full height to structural supports.
   a. Continue framing around ducts and similar items which penetrate partitions.
8. Utilize slip-type head track assemblies where framing extends to overhead structural supports.
   a. Configure to resist lateral loads while accommodating deflection of overhead building superstructure without inducing axial loading on partition framing.

B. Align stud knockouts to facilitate running of wires and conduit.

### 3.3 GRID SUSPENSION SYSTEMS:

1. Attach perimeter wall track or angle where grid suspension systems meet vertical surfaces.
2. Mechanically join main beam and cross-furring members to each other and butt-cut to fit into wall track.
3. Install suspension systems that are level to within 1/8 IN in 12 FT measured lengthwise on each member that will receive finishes and transversely between parallel members that will receive finishes.

## END OF SECTION

This page intentionally left blank.

# SECTION 09 29 00
GYPSUM WALLBOARD

## PART 1 - GENERAL

### 1.1 SUMMARY

A. Furnish all labor, materials, tools, equipment, and services for Gypsum Wallboard, as indicated, in accordance with provisions of Contract Documents.

B. Completely coordinate with work of other trades.

### 1.2 QUALITY ASSURANCE

A. Provide products manufactured from materials free of sulfur, formaldehyde or other deleterious chemicals. Natural gypsum ore shall be mined in North America. Synthetic gypsum shall be pure calcium sulfate from domestic sources.

B. ASTM Standards:
1. ASTM C475: Joint Treatment Materials for Gypsum Wallboard.
2. ASTM C840: Application and Finishing of Gypsum Board.
3. ASTM C1002: Steel Drill Screws for Application of Gypsum Board or Metal Plaster Bases.
4. ASTM C1047: Standard Specification for Accessories for Gypsum Wallboard and Gypsum Veneer Base.
5. ASTM C1396: Standard Specification for Gypsum Board.
6. ASTM D3273: Standard Test Method for Resistance to Growth of Mold on the Surface of Interior Coatings in an Environmental Chamber.
7. ASTM E84: Surface-Burning Characteristics of Building Materials.
8. ASTM E90: Sound Transmission Testing.
9. ASTM E119: Fire Tests of Building Construction.
10. GA-216 Recommended Specifications.
11. GA-238 Guidelines for Prevention of Mold Growth on Gypsum Board.

### 1.3 SUBMITTALS

A. Product Data:
1. Provide copies of manufacturer's specifications and installation instructions for each type of material and accessory required.
2. Where fire resistance classification is indicated, submit copies of nationally recognized testing laboratory listings of products proposed for use.
3. Include data required to show specification compliance.

B. Project Information:
1. Manufacturer name of listed products.

## PART 2 - PRODUCTS

### 2.1 ACCEPTABLE MANUFACTURERS

A. Gypsum Wallboard and Accessories:
1. Base:
   a. Certainteed.
2. Optional:
   a. CGC

B. Other manufacturers desiring approval comply with Division 01.

## 2.2 GYPSUM WALLBOARD SCHEDULE

A. General:
1. Utilize the following, in conjunction with Wall Types, Details, and Finish Schedule to determine types of wallboard appropriate to each condition.
2. Furnish in maximum available lengths, consistent with installation requirements.
   a. Long Edge: Tapered.
   b. Short Ends: Square.

B. Interior:
1. Gypsum Panels – Mold and moisture-resistant:
   a. Thickness: 5/8 IN.
   b. Mold-resistance score: 10 per ASTM D3273.
   c. Base Product:
   d. M2Tech Gypsum Board and M2Tech Type X Gypsum Board by CertainTeedOptional Products:
      1) Sheetrock Mold Tough by CGC.

C. Interior Ceilings:
1. Gypsum Panels - Standard:
   a. Applications: Non-wet, non-fire rated interior walls and ceilings.
   b. Thickness: 1/2 IN.
   c. Base Product: Easi-Lite Interior Ceiling Board by CertainTeed
   d. Optional Product: Sheetrock Interior Ceiling Board by CGC.

## 2.3 TRIM ACCESSORIES

A. General Interior Trim:
1. General:
   a. Comply with ASTM C1047.
   b. Material for general, interior uses: Galvanized or aluminum coated steel sheet, rolled zinc, or paper faced galvanized steel sheet.
   c. Material for wet and exterior areas: Zinc.
2. Shapes:
   a. Corner bead.

## 2.4 JOINT TREATMENT MATERIALS

A. General:
1. Comply with ASTM C475.

B. Joint Tape:
1. Interior Gypsum Wallboard: Paper.

C. Joint Compounds for Interior Gypsum Wallboard:
1. Use product types recommended by wallboard manufacturer for each condition.
2. Ensure products are compatible with other compounds applied previously or on successive coats.

| Required Compound Types | | |
|---|---|---|
| **Purpose** | **Additional Description** | **Compound Type Required** |
| Pre-filling | For filling open joints and voids | Setting-type, Taping Compound |
| Embedding and First Coat | For embedding tapes & first coat over joints, fasteners, and trim flanges | Setting-type, Taping Compound |
| Fill Coat | For second coat | Setting-type, Sandable Topping Compound<br>OR<br>Drying-type, All purpose Compound. |
| Finish Coat | For third coat | Drying-type, All purpose Compound. |

| | | |
|---|---|---|
| Skim Coat | For final coat of Level 5 finish, where a Level 5 finish is specified | Setting-type, Sand-able Topping Compound<br>OR<br>Drying-type, All purpose Compound.<br>OR<br>High-build, spray applied coating product designed to produce Level 5 finish without traditional, trowel applied skim coat. |

***Notes:***

*1. Above table applies to conventional, paper faced, interior wallboard. For paperless wallboard panels: Use compounds recommended by panel manufacturer.*

*2. Cementitious Backer Units: As recommended by backer unit manufacturer. Use compounds recommended by panel manufacturer.*

*3. Water-Resistant Gypsum Backing Board: Use setting-type taping compound and setting type, sandable topping compound.*

*4. Glass Mat, Water Resistant Backing Panel: Use compounds recommended by panel manufacturer.*

*5. Provide dust control products in occupied areas or adjacent to occupied areas. Base Product: Sheetrock Brand Dust Control Joint Compound by USG.*

D. Laminating Adhesive:
   1. Adhesive or joint compound recommended for directly adhering gypsum panels to continuous substrate.
   2. Manufacturer's recommended type for use with selected materials, mildew resistant, non-staining type, and with a VOC content of 50 g/L or less.

### 2.5 MISCELLANEOUS ITEMS

A. Screws:
   1. ASTM C1002, unless otherwise indicated.
   2. Self-tapping, bugle head, length to penetrate framing member minimum 5/8 IN.
   3. Type S for gypsum wallboard to metal; Type G for gypsum wallboard to gypsum wallboard.
   4. Screws used to secure wallboard panels to Metal Studs: Comply with ASTM C954.
   5. Screws used with backer boards: As recommended by panel manufacturer.

B. Sealants:
   1. Other than acoustical sealant below, see Section 07 92 16.

C. Foam tape:
   1. PVC 1/2 x 1/4 IN: With pressure sensitive adhesive; Norseal.
   2. EPDM 1/2 x 1/4 IN: With pressure sensitive adhesive; Cellular rubber by Gasket Dynamics.

D. Sealer for moisture-resistant gypsum wallboard:
   1. Manufacturer's standard compound.
   2. Use at joints, cut edges and screw penetrations.

E. Framing and suspension systems for Gypsum Board Ceilings:
   1. Specified in Section 09 22 16.

## PART 3 - EXECUTION

### 3.1 INSPECTION AND PREPARATION

A. Examine supporting structure and conditions prior to wallboard installation.

B. Correct unsatisfactory conditions.

C. Start of installation assumes responsibility for shielding integrity of system.

D. Verify areas scheduled to receive radiation shielding are suitable for installation.

## 3.2 INSTALLATION – GENERAL

A. General Requirements:
1. Comply with ASTM C840.
2. Install products per manufacturer's specific installation instructions.
3. Remove loose materials and vacuum cavity of gypsum dust prior to enclosing stud space.
4. Install wallboard vertically with edges over metal stud framing members and similar framing support members.
5. Secure to each support or framing member with screws.
6. Bring boards into contact but do not force into place.
7. Fit neatly and carefully.
8. Stagger edge joints on opposite side of partition so they occur on different framing members.
9. Proceed with attachment from board center toward ends and edges.
10. Make cuts neatly.
11. Install with 1/4 IN gap between gypsum board and floor.
12. Seal ends, cutouts and screw penetrations of moisture resistant boards with sealer.
13. Install wallboard over metal framing studs and similar framing support members at interior face of exterior walls full height from floor to structure above.

B. Changes in Material:
1. Install L-shaped corner bead where partition or ceiling abuts structural element or dissimilar wall or ceiling.

## 3.3 INSTALLATION - SINGLE LAYER SYSTEM

A. Set screws between 3/8 to 1/2 IN from edges.
1. Space maximum 8 IN OC at edges and, 12 IN OC in field of board.
2. Where wallboard butts at wall/ceiling juncture, hold screws back 6 IN from edges.
3. Use closer screw spacing if required by UL.

B. Drive screws so head rests in slight dimple without cutting face paper or fracturing core.

## 3.4 INSTALLING TRIM ACCESSORIES

A. General:
1. For trim with back flanges intended for fasteners, attach to framing with same fasteners used for panels. Otherwise, attach trim according to manufacturer's written instructions.

B. Control Joints:
1. Install control joints according to ASTM C840 and in specific locations approved by Architect for visual effect.

C. Interior Trim: Install in the following locations:
1. Cornerbead: Use at outside corners.
2. Bullnose Bead: Use at outside corners where indicated.
3. LC-Bead: Use at exposed panel edges.
4. L-Bead: Use where indicated.
5. U-Bead: Use at exposed panel edges where indicated.
6. Curved-Edge Cornerbead: Use at curved openings.

D. Specialty Trim: Install in locations indicated.

## 3.5 INSTALLATION – CEILING

A. Install in compliance with manufacturer's recommendations.

B. Install ceiling panels across framing to minimize the number of abutting end joints and to avoid abutting end joints in central area of each ceiling. Stagger abutting end joints of adjacent panels' not less than one framing member.

C. Access Panels and Doors: Locate where required by Mechanical and electrical divisions.

## 3.6 WALLBOARD FINISHING

A. General:
   1. Treat gypsum board joints, interior angles, edge trim, control joints, penetrations, fastener heads, surface defects, and elsewhere as required to prepare gypsum board surfaces for decoration.
   2. Promptly remove residual joint compound from adjacent surfaces.

B. Pre-fill open joints and voids, rounded or beveled edges, and damaged surface areas.

C. Apply joint tape over gypsum board joints, except those with trim having flanges not intended for tape.

D. Where wallboard abuts dissimilar surfaces: Securely attach continuous trim beads in accordance with manufacturer's directions.

E. Where bead abuts exterior metal window frames or other metal components, separate from other material by use of foam tape.

F. Apply Joint Compound and Tape in accordance with fire-rated design.
   1. Apply joint treatment compound in accordance with manufacturer's directions.
   2. Fill joints, screw heads, and internal corners with compound.
   3. Extend joint system vertically from floor to extent described as follows:
      a. Fire Walls, Barriers, and Partitions: Extend to full height of wall.
      b. Smoke Barriers and Partitions: Extend to full height of wall.
      c. Interior face of exterior wall (non-rated): Extend to full height of wall.
      d. Other interior partitions (non-rated): Extend to 6 IN above ceiling.
   4. Refer to Drawings for indication of partition heights.

G. Level 4 Finish:
   1. Comply with ASTM C840.
   2. After drying, sand or otherwise smooth final coat of compound as needed to eliminate high spots or excess compound to leave smooth, even, and level surface.
   3. Draw down final coat of compound to a smooth even plane.
   4. Locations:
      a. Wallboard scheduled to be finished with Gloss Level 1 (flat), Level 2 (velvet), or Level 3 (eggshell) paint, glazed coating, textured coating, or wall covering.
      b. Where above listed surfaces are to be finished with textured decorative treatments, wall covering, paneling, or wall guard.
      c. All remaining locations, unless noted otherwise.

H. Level 5 Finish:
   1. Comply with ASTM C840.
   2. Trowel skim coat of joint compound leaving a thin film covering the entire surface, in accordance with manufacturer's recommendations.
   3. Make surfaces free of tool marks and ridges.
   4. Applications:
      a. Wall board scheduled to be finished with Gloss Level 4 (satin), Level 5 (semi-gloss), Level 6 (gloss), Level 7 (high gloss), paint, glazed coating, textured coating, or wall covering.

I. Repairs:
   1. After painter has applied primer to wallboard surfaces, repair and refinish defective areas.
   2. If wallboard is damaged, or surfaces are roughened, repair, or remove and replace, to satisfaction of Architect, at no additional cost to Owner.

## 3.7 PROTECTION

A. Protect installed wallboard from water damage during construction.

B. Protect installed products from damage from weather, condensation, direct sunlight, construction, and other causes during remainder of the construction period.

C. Remove and replace panels that are wet, moisture damaged, and mold damaged.
   1. Indications that panels are wet or moisture damaged include, but are not limited to, discoloration, sagging, or irregular shape.
   2. Indications that panels are mold damaged include, but are not limited to, fuzzy or splotchy surface contamination and discoloration.

D. Prior to finishing, walls shall be inspected for visible mold growth.
   1. Replace affected portions.

## END OF SECTION

# PART 1 - GENERAL

## 1.1 RELATED SECTIONS:

A. Section *09 53 00* - Acoustical Suspension.

## 1.2 REFERENCES

A. American Society for Testing and Materials International (ASTM)
   1. ASTM C 423-09a, Standard Test Method for Sound Absorption and Sound Absorption Coefficients by the Reverberation Room Method
   2. ASTM E 1264-08e1, Standard Classification for Acoustical Ceiling Products.
   3. ASTM E 1477-98a(2008), Standard Test Method for Luminous Reflectance Factor of Acoustical Materials by Use of Integrating-Sphere Reflectometers.

B. Canadian Standards Association (CSA International)
   1. CSA B111-1974(R2003), Wire Nails, Spikes and Staples.

C. Department of Justice Canada (Jus)
   1. Canadian Environmental Protection Act (CEPA), latest edition, c. 33.
   2. Transportation of Dangerous Goods Act (TDGA), latest edition, c. 34.

D. Underwriter's Laboratories of Canada (ULC)
   1. CAN/ULC-S102-03, Surface Burning Characteristics of Building Materials and Assemblies.

## 1.3 SUBMITTALS

A. Submit samples in accordance with Section *01 33 00*.

B. Submit duplicate samples of each type of acoustical units.

## 1.4 QUALITY ASSURANCE

A. Regulatory Requirements:
   1. Fire-resistance rated floor/ceiling and roof/ceiling assembly: certified by Canadian Certification Organization accredited by Standards Council of Canada.

## 1.5 DELIVERY, STORAGE AND HANDLING

A. Protect on site stored or installed absorptive material from moisture damage.

B. Store extra materials required for maintenance, where directed by Consultant.

## 1.6 EXTRA MATERIAL

A. Provide extra materials of acoustic units in accordance with Section *01 78 00*.

B. Provide acoustical units amounting to ***1*** full boxes for each pattern and type required for project.

C. Ensure extra materials are from same production run as installed materials.

D. Clearly identify each type of acoustic unit, including colour and texture.

E. Deliver to Consultant, upon completion of the work of this section.

# PART 2 - PRODUCTS

## 2.1 MATERIALS

A. Type ACT-1:
   a. Mineral Fibre, wet formed

b. Vinyl laminated face
c. Sealed back and edges
d. Surface texture: Smooth
e. No pattern
f. Edge Profile: square lay-in
g. Size: 24”x48”x3/4”
h. Type IV, Form 2, Pattern GH with film laminate surface finish
i. Class 100: Type X
j. Class A fire resistance/flame spread
k. NRC: N/A
l. CAC: 40
m. Acceptable Products:
   1) *Clean Room ClimaPlus – item 56091, as manufactured by Canadian Gypsum Company, Inc.,*
   2) *Clean Room VL #870 as manufactured by Armstrong World Industries, Inc.*
   3) *or consultant approved equivalent.*

## PART 3 - EXECUTION

### 3.1 EXAMINATION

A. Do not install acoustical panels and tiles until work above ceiling has been inspected by Consultant and Authority Having Jurisdiction.

### 3.2 INSTALLATION

A. Install acoustical panels and tiles in ceiling suspension system.

### 3.3 APPLICATION

A. Install acoustical units as indicated on Reflected Ceiling Plan.

B. Scribe acoustic units to fit adjacent work. Butt joints tight and terminate edges with moulding.

### 3.4 INTERFACE WITH OTHER WORK

A. Coordinate with Section *09 53 00*.

B. Coordinate ceiling work to accommodate components of other sections, such as light fixtures, diffusers, speakers, sprinkler heads, to be built into acoustical ceiling components.

**END OF ACOUSTICAL PANEL CEILINGS**

# SECTION 09 53 00
ACOUSTICAL SUSPENSION

## PART 1 - GENERAL

### 1.1 RELATED SECTIONS

A. Section 09 51 13 – Acoustical Panel Ceilings.

### 1.2 REFERENCES

A. American Society for Testing and Materials International (ASTM)
   1. ASTM C 635/C 635M-07, Standard Specifications for the Manufacture, Performance and Testing of Metal Suspension Systems for Acoustical Tile and Lay-In Panel Ceilings.
   2. ASTM C 636/C 636M-08, Standard Practice for Installation of Metal Ceiling Suspension Systems for Acoustical Tile and Lay-In Panels.

### 1.3 DESIGN REQUIREMENTS

A. Maximum deflection: 1/360th of span to ASTM C 635 deflection test.

### 1.4 SUBMITTALS

A. Provide submittals in accordance with Section 01 33 00.

B. Submit shop drawings in accordance with Section 01 33 00.
   1. Submit reflected ceiling plans for special grid patterns as indicated.
   2. Indicate lay-out, insert and hanger spacing and fastening details, splicing method for main and cross runners, location of access splines and acoustical unit support at ceiling fixture lateral bracing and accessories.

C. Provide samples in accordance with Section 01 33 00.
   1. Submit one representative model of each type ceiling suspension system.
   2. Ceiling system to show basic construction and assembly, treatment at walls, recessed fixtures, splicing, interlocking, finishes, acoustical unit installation.

### 1.5 DELIVERY, STORAGE AND HANDLING

A. Deliver, store and handle materials in accordance with Section 01 61 00.

## PART 2 - PRODUCTS

### 2.1 MATERIALS

A. All ceiling suspension components are to be of single manufacturer.

B. Intermediate duty system to ASTM C 635.

C. Basic materials for suspension system: commercial quality cold rolled steel.

D. Type **ACT-1**:
   1. Suspension system: non fire rated, made up as follows:
      a. Two directional exposed tee bar grid with factory applied closed cell gaskets for controlled environment rooms.
   2. Track Width: *15/16”*
   3. Wall Angle: *US28CE with C-8 Hold-down Clips*
   4. Colour: *Flat White*
   5. Provide hold down clips : *L15*

6. Acceptable material:
   *a. USG DONN® Brand DXACE Acoustical Suspension System, as manufactured by Canadian Gypsum Company, Inc.*
   *b. Optional:*
      *1) CertainTeed*
      *2) Armstrong*

E. Hanger wire: galvanized soft annealed steel wire:
   1. 3.6 mm diameter for access tile ceilings.

F. Hanger inserts: purpose made.

G. Accessories: splices, clips, wire ties, retainers and wall moulding, to complement suspension system components, as recommended by system manufacturer.

## PART 3 - PART 3 - EXECUTION

### 3.1 MANUFACTURER'S INSTRUCTIONS

A. Compliance: comply with manufacturer's written recommendations or specifications, including product technical bulletins, handling, storage and installation instructions, and datasheets.

### 3.2 INSTALLATION

A. Installation: in accordance with ASTM C 636 except where specified otherwise.

B. Install suspension system to manufacturer's instructions.

C. Do not erect ceiling suspension system until work above ceiling has been inspected by Consultant and Authority Having Jurisdiction.

D. Secure hangers to overhead structure using attachment methods recommended by manufacturer as acceptable to Consultant.

E. Install hangers spaced at maximum 1200 mm centres and within 150 mm from ends of main tees.

F. Lay out system according to reflected ceiling plan.

G. Ensure suspension system is coordinated with location of related components.

H. Install wall moulding to provide correct ceiling height.

I. Completed suspension system to support super-imposed loads, such as lighting fixtures, diffusers, grilles, speakers, etc.

J. Support at light fixtures and diffusers with additional ceiling suspension hangers within 150 mm of each corner and at maximum 600 mm around perimeter of fixture. Support in a manner that will not restrict the removal of ceiling tiles once in place.

K. Interlock cross member to main runner to provide rigid assembly.

L. Frame at openings for light fixtures, air diffusers, speakers and at changes in ceiling heights.

M. Finished ceiling system to be square with adjoining walls and level within 1:1000.

**END OF ACOUSTICAL SUSPENSION**

# SECTION 09 66 23

THIN-SET EPOXY TERRAZZO (TER)

## PART 1 - GENERAL

### 1.1 SUMMARY

A. Furnish labor, materials, tools, equipment, and services for Thin-Set Epoxy Terrazzo, as indicated, in accordance with provisions of Contract Documents.

B. Completely coordinate with work of other trades.

### 1.2 QUALITY ASSURANCE

A. Contractor's Qualifications:
   1. Installation must be performed by a manufacturer-certified applicator with skilled mechanics having not less than 3 years satisfactory experience in the installation of the type of system as specified in this section.
   2. Installer certified in writing by the manufacturer of the Thin-set Epoxy Terrazzo Flooring System.
   3. Current contractor member in good standing with the Terrazzo Tile & Marble Association of Canada (TTMAC).

B. Obtain materials same source manufacturer.

C. Comply with recommendations of Terrazzo Tile & Marble Association of Canada, (TTMAC).

### 1.3 SUBMITTALS

A. Shop Drawings:
   1. Joint treatments, edge conditions and layout.
      a. Details of anchorage and special features.

B. Product Data:
   1. Written certification of compliance with TTMAC requirements.
   2. Manufacturer's installation instructions and certificate indicating that materials are in compliance with specifications.
   3. Manufacturer's written approval of installer.

A. Samples:
   1. Three samples  square of each material specified in Drawing Finish Schedule.
   2. Samples of pattern and color of terrazzo for review of color, pattern and texture.

B. Contract Closeout Information:
   1. Maintenance data:
      a. See Section 01 78 00.

## PART 2 - PRODUCTS

### 2.1 MANUFACTURERS

A. Synthetic Matrix Terrazzo (TERR):
   1. Base:
      a. Sherwin-Williams; General Polymers.
   2. Optional:
      a. Dex-O-Tex
      b. Terrazzo & Marble Supply Companies

B. Other manufacturers desiring approval comply with Section 01 61 00.

## 2.2 DESIGN CRITERIA

| Minimum Physical Properties | | |
|---|---|---|
| Property | Test Method | Required Value |
| Hardness, at 24 HRS Shore D | ASTM D2240 | 85/65 |
| Compressive Strength | ASTM D695 | 10,000 PSI |
| Tensile Elongation | ASTM D638 | 2 – 4% |
| Tensile Strength | ASTM C307 | 3000 PSI |
| | ASTM D638 | 4500 PSI |
| Water Absorption | ASTM D570 | 0.10% |
| Adhesion | ACI-503R | 300 PSI, 100% concrete failure |
| Abrasion Resistance | ASTM D4060 CS-17 Wheel | 70-90 milligrams lost |
| Flammability | ASTM D635 | Self-extinguishing over concrete |
| Flexural Strength | ASTM C580 | 4500 PSI |
| | ASTM D790 | 10,000 PSI |
| Impact Resistance | MIL-D-3134, Sec. 4.7.3 | 16 FT-LBS w/out cracking, delamination or chipping |
| Resistance to Elevated Temperatures | MIL-D-3134J | No slip or flow at required temperature of 158 DEGF |
| Slip Resistance | ANSI 137.1 | Compliant |

## 2.3 MATERIALS

A. Synthetic Matrix Terrazzo Flooring System:
   1. Factory-mixed, thermosetting, epoxy resin and hardener, mineral filler and pigment, 100% non-volatile, complying with or exceeding NTMA requirements and as herein specified.
   2. Integral Cove Base:
      a. Form integral coved base with top bead and divider strip.
      b. Cove: radius.
      c. Height: .
      d.
      e. Horizontal: maximum of from wall to divider strip.
      f. Place divider strips in base at same interval as floor.
   3. Finished Terrazzo Thickness:
      a. .
   4. Base Product: Thin-Set Epoxy Terrazzo #1100 Series by General Polymers.

B. Binder Resin:
   1. Base Product: 3520 Epoxy Terrazzo Matrix by General Polymers.

C. Aggregate:
   1. Natural, sound, crushed marble chips, color and grading to match Architect's approved sample.
   2. Colors as selected by Architect. From NTMA Catalog, latest edition.
      a. Up to three different colors of chips may be selected for each color of terrazzo.
   3. Use maximum size aggregate, within limits of workability for flooring thickness indicated.

D. Crack and Joint Filler:
   1. Epoxy base.
   2. Base Manufacturer: General Polymers.

E. Crack Isolation Membrane:
   1. High solids flexible epoxy membrane.
   2. Base Product: 3556 Epo-Flex Terrazzo Membrane by General Polymers.

F. Finishing Grout / Filler:

1. Compound with filler and pigments, as recommended by matrix manufacturer.
2. Base Product: 5270 Epoxy Filler by General Polymers.

G. Finish Sealer:
1. Compound furnished or approved by matrix manufacturer.

H. Divider Strips:
1. Style: As required for type and thickness of terrazzo.
2. Material and Thickness:
   a. Non-conductive terrazzo:
      1) Material: White alloy zinc or aluminum.
      2) Size:
         a) 14 GA X depth matching the thickness of terrazzo.

I. Accessory Strips:
1. Provide Cove Base Beads, Cove Divider Strips, and other items necessary to install work.
2. Material: Match floor divider strips.

J. Adhesives and Sealants:
1. Type as recommended by manufacturer.

## PART 3 - EXECUTION

### 3.1 INSPECTION

A. Examine surfaces for defects, irregularities and conditions under which flooring is to be installed.

B. Verify substrates are free of materials that may affect adhesion.

C. Identify cracks and other surface defects which need repair prior to application of floor system.

D. Inspect substrate for markers, paint and similar materials used for layout by others and take remedial action as necessary to remove layout line work to prevent bleed-through.

E. Verify floors are level or meet indicated slope.

F. Do not proceed with installation until unsatisfactory conditions have been corrected.

G. Installation indicates acceptance of substrates and responsibility for performance.

### 3.2 PREPARATION

A. Evaluate substrate condition, including substrate moisture transmission, quantity and severity of cracking, and the extent of repairs needed.

B. Coordinate installation with requirements of Section 07 16 04 Concrete Floor Moisture Testing, and Section 07 16 05 Water Vapor Emission Control System.

C. Prepare cracks, construction joints, control joints and other non-moving joints with specified products in accordance with manufacturer’s recommendations.

D. Expansion joints and similar moving joints:
1. Terrazzo System to terminate at the edge of isolation and expansion joints.

### 3.3 INSTALLATION

A. Apply each component of Thin-set Epoxy Terrazzo Flooring System in compliance with manufacturer's written installation instructions and strictly adhere to mixing and installation methods, recoat windows, cure times and environmental restrictions.

B. Prime in accordance with manufacturer's instructions.

C. Install divider and accessory strips in adhesive without voids below strips.

D. Align cove divider strips with floor divider strips.

E. Place matrix and aggregates.

F. Ensure that fluids from grinding operation do not react with metal strips to stain adjacent surfaces.

G. Finish Sealer:
   1. Seal surface with finish sealer after thoroughly curing and cleaning.
      a. Wash surfaces with a neutral cleaner.
      b. Rinse with clean water and allow surface to dry.
      c. Apply sealer in accordance with sealer manufacturer's directions.

**3.4 PROTECTION**

A. Provide protection for finished work until building is ready for occupancy.

**3.5 CLEANING**

A. Clean as recommended by system manufacturer when building is ready for occupancy.

## END OF SECTION

# SECTION 09 91 23
INTERIOR PAINTING

## PART 1 - GENERAL

### 1.1 SUMMARY

A. Furnish all labor, materials, tools, equipment, and services for Interior Painting, as indicated, in accordance with provisions of Contract Documents.

B. Completely coordinate with work of other trades.

### 1.2 QUALITY ASSURANCE

A. Definitions:
1. "Paint" and "painting" refer to applied coatings.
2. Finished room or space: Room or space indicated to receive a finish in the room finish schedule.
3. Finished room or space: Room or space indicated to receive a finish in Section 09 06 00 - Room Finish Schedule.

Mechanical work: Work included in Mechanical Specification Divisions.

4. Electrical work: Work included in Electrical Specification Divisions.

B. Work included:
1. Interior surfaces in finished rooms or spaces, unless indicated not to be painted or indicated to be painted under other sections.
2. Mechanical and electrical work:
   a. Interior mechanical and electrical equipment not completely factory finished.
   b. In finished rooms and spaces: Exposed ductwork, piping, insulated piping, conduit, busways, raceways, and associated accessories.
   c. All new fireshose cabinets and electrical panels that are installed with a factory primed finish.

C. Environmental Standards:
1. Green Seal GS-11, Paints.
2. Green Seal GS-03, Anti-Corrosive Paints.
3. South Coast Air Quality Management District, Rule 1113, VOC content limits for Clear Wood Finishes, Floor Coatings, Stains and Shellacs.
4. ASTM D2486-89, Standard Test Method for Scrub Resistance of Interior Latex Flat Wall Paints.
5. ASTM D2805-88, Standard Test Method for Hiding Power of Paints by Reflectometry.

D. Standard of Acceptance.
1. Walls: no defects visible from a distance of 3 FT-0 IN at 90 DEG to surface.
2. Ceilings and bulkheads: No defects visible from floor at 45 DEG to surface when viewed using final lighting source.
3. Final coat to exhibit uniformity of colour and uniformity of sheen across full surface area.

### 1.3 SUBMITTALS

A. Product Data:
1. Manufacturer's data for each paint type to be applied indicating conformance to specifications.
2. MSDS.
   a. Organize submittals by Appliation (Eg. Ceilings, Walls, Door Frames, etc.)

B. Samples:

1. Three 216mm X 280mm 8 1/2 IN x 11 IN samples of each color and finish as specified in the Room Finish Schedule.

C. Contract Closeout Information:
1. Maintenance data.

## PART 2 - PRODUCTS

### 2.1 ACCEPTABLE MANUFACTURERS

A. Provide paint as product of one manufacturer as far as possible.

B. Paint, stain, and coating systems listed are Sherwin Williams unless noted otherwise.
1. Use comparable performance, environmental, and aesthetic requirements for paints by Optional manufacturers.
2. Colour selections to be determined by consultant after contract award. Allow 10 Base and 15 Accent colours.
3. Use MPI rating for comparison.

C. Paints shall not contain cadmium or lead.

D. Paints:
Dulux Paints “Lifemaster” Colour SW 7029 Agreeable Gray and door frames is colour Jogging Path if applicable. HDH site uses Dulux paints so we match their in house inventory. We are only painting walls affected by our work.
1. Base:
a. Dulux Lifemaster

E. Other manufacturers desiring approval comply with Section 01 25 13.

### 2.2 MATERIALS

A. Paints: As Scheduled in Part 3.
1. Unscheduled items: Bring to the attention of Architect.
2. Colors: As selected by Architect after Contract Award, and as indicated in Mechanical and Electrical specification.

B. Gloss range: As indicated for the Paint Systems, when measured in accordance with ASTM-D523:
1. Flat: Below 15, at 85-degrees.
2. Eggshell: Between 5 and 20, at 60-degrees.
3. Satin: Between 15 and 35, at 60-degrees.
4. Semi-gloss: Between 30 and 65, at 60-degrees.
5. Gloss: More than 65, at 60-degrees.

## PART 3 - EXECUTION

### 3.1 INSPECTION

A. Review other sections in which primers are provided to ensure compatibility of the total system for various substrates. On request, furnish information on characteristics of finish materials to ensure use of compatible primers. Notify the Consultant about anticipated problems using the materials specified over substrates primed by others.

B. Examine surfaces carefully for defects which cannot be corrected and may prevent satisfactory results.

C. Commencement of work in a specific area constitutes acceptance of surfaces, and responsibility for performance.

### 3.2 SURFACES NOT TO BE PAINTED

A. Anodized aluminum, stainless steel, chromium plate, glass, copper, bronze or similar materials.

B. Moving parts of valves, operating units, mechanical and electrical parts, such as valve and damper operators, sending devices, motor and fan shafts.

C. Code labels, such as UL, FM that are mylar or flat (non-embossed) plates.
   1. Embossed plates and labels stamped into frames to be painted will remain readily visible and convenient for identification by Authority Having Jurisdiction.

D. Equipment identification or rating plates.

E. Items having complete factory finish with exception of:
   1. Electrical panels.
   2. Control cabinets.
   3. Similar surfaces in finished areas.

### 3.3 PREPARATION - GENERAL

A. Ensure that surfaces are clean and dry.

B. Ensure that surfaces are free of foreign materials which will affect adhesion or appearance.

C. Remove any organic matter and neutralize surface.

D. Eliminate efflorescence before painting.

E. Before painting, test surfaces with moisture meter. Do not commence painting operations until moisture level of substrate material is within manufacturer’s accepted limits.

### 3.4 MATERIAL PREPARATION

A. Mix and prepare materials per manufacturer's recommendations.

B. Stir, agitate or blend materials to produce a mixture of uniform density as required for application of materials.

### 3.5 PREPARATION - FERROUS METAL SURFACES AND HOLLOW METAL

A. Remove rust, loose mill scale, welding slag, dirt, oil, grease and other substances in accordance with MPI requirements.

B. Wire brush, or grind as necessary to remove shoulders at edge of sound paint to prevent telegraphing.

C. Touch up damaged shop coats.

D. For surfaces with touched up shop coat, omit first coat.

E. Hollow metal frame joints at intersections of rabbets, stops, and soffit joints:
   1. Neatly fill corner seam with painter's caulk prior to painting.

F. New frames supplied with pre-drilled holes that are not required for specific installation, fill holes, sand smooth and prep for new paint finish.

### 3.6 PREPARATION - GALVANIZED METAL SURFACES AND NONANODIZED ALUMINUM

A. Follow requirements of MPI.

B. Treat surfaces with galvanized surface cleaner as recommended by primer and topcoat manufacturer.

### 3.7 PREPARATION - GYPSUM WALLBOARD

A. Repair minor irregularities left by finishers.

B. Exercise care to avoid raising nap of paper.

C. Apply prime coat.

D. Notify gypsum wallboard finisher to repair and refinish areas which indicate defects after application of primer.

E. Re-prime refinished areas.

### 3.8 PREPARATION – CONCRETE AND MASONRY

A. Repair minor defects.

B. Remove oil from concrete by washing with xylol.

C. Block Filler:
   1. Apply to masonry to fill pinholes and minor surface defects, and to prime surface for topcoat.
   2. Apply by brush, roller or sprayer.
      a. Where spray-applied: Back-roll with roller or squeegee.
   3. Minimum Nominal Thickness: 10 MIL DFT.
      a. Comply with manufacturer’s recommended coverage rates for conditions encountered.
   4. Provide complete cover with recommended coating system.

D. Obtain architect's approval of finish for surfaces to receive high build glazed coatings.

### 3.9 APPLICATION - GENERAL

A. Paint surfaces as specified in paragraphs "Schedule - Interior Paint Systems".

B. Provide complete coverage to hide.
   1. When color or undercoats show through, apply additional coats at no additional cost until paint film is of uniform finish and color.

C. Employ individuals skilled in this trade.

D. Mix and apply as recommended by manufacturer.

E. Do not apply succeeding coats until Consultant has reviewed Prime coat.

F. Remove and protect hardware, accessories, plates, fixtures, finished work, and similar items, or provide ample in place protection.

G. Upon completion of painting, carefully replace removed items and/or remove protection.

H. Apply materials under adequate illumination.

I. Evenly spread and smoothly flow on for full, smooth cover.

J. Ensure that coats are dry before recoating.

K. Touch up suction or hot spots in plaster, gypsum wallboard, concrete block, and concrete before painting.

L. Touch up abraded areas of shop prime coats before subsequent coats are applied.

M. Back prime wood trim with penetrating sealer.

### 3.10 APPLICATION - INTERIOR

A. Finish door edges same as faces of doors.

B. Finish closets, semi-exposed surfaces behind grilles, radiation, etc., to match nearest adjoining surface.

### 3.11 PROTECTION AND CLEANUP

A. Protect adjacent work against damage by painting and finishing work.

B. Clean, repair or replace, and repaint damaged work as directed by Consultant.

C. Provide "WET PAINT" signs.

D. Remove temporary protective wrappings, after completion of operations.

E. Clean paint spattered surfaces.

F. Use care not to damage finished surfaces.

G. Remove surplus materials, scaffolding and debris.

H. Leave areas broom clean.

### 3.12 SCHEDULE - INTERIOR PAINT SYSTEMS

A. Gypsum wallboard and plaster surfaces, ceilings:
   1. Acrylic (PT), Gloss Level 1 (Flat):
      a. Dulux Lifemaster:
         1) Primer coat: Dulux Lifemaster Primer;
         2) Intermediate coat: Dulux Lifemaster acrylic Eg-Shel;
         3) Topcoat: Dulux Lifemaster acrylic Eg-Shel;

B. Metal doors and frames:
   1. Waterborne Acrylic, Gloss Level 5 Semi gloss:
      a. Sherwin Williams:
         1) Primer coat: Dulux Lifemaster Primer;
         2) Intermediate coat: Dulux Lifemaster acrylic Eg-Shel;
         3) Topcoat: Dulux Lifemaster acrylic Eg-Shel;

C. Concrete and concrete block walls:
   1. Acrylic (PNTL), Gloss Level 3 Eggshell:
      a. Dulux Lifemaster:
         1) Primer coat: Dulux Lifemaster Primer;
         2) Intermediate coat: Dulux Lifemaster acrylic Eg-Shel;
         3) Topcoat: Dulux Lifemaster acrylic Eg-Shel;

**END OF SECTION**

This page intentionally left blank.

**DIVISION 20** **MECHANICAL COMMON WORK RESULTS**

Section 20 05 05 Mechanical Work General Instructions
Section 20 05 10 Basic Mechanical Materials and Methods
Section 20 05 25 Mechanical Insulation
Section 20 05 35 Demolition and Revision Work

**DIVISION 21** **FIRE SUPPRESSION**

Section 21 13 00 Fire Protection Sprinkler System

**DIVISION 22** **PLUMBING**

Section 22 11 00 Domestic Water Piping and Specialties
Section 22 13 00 Drainage and Vent Piping and Specialties
Section 22 15 00 General Service Compressed Air System

**DIVISION 23** **HEATING, VENTILATING AND AIR CONDITIONING**

Section 23 22 00 Steam and Condensate Piping and Pumps
Section 23 30 00 HVAC Air Distribution

**END OF SECTION**

# 1 GENERAL

## 1.01 REFERENCES

.1 Division 00 and Division 01 apply to and are a part of this Section.

## 1.02 APPLICATION

.1 This Section specifies requirements that are common to Mechanical Divisions work Sections and it is a supplement to each Section and is to be read accordingly. Where requirements of this Section contradict requirements of Divisions 00 or 01, conditions of Division 00 or 01 to take precedence, as confirmed with Owner and reviewed with Consultant prior to Bid submission.

.2 Be responsible for advising product vendors of requirements of this Section.

## 1.03 DEFINITIONS

.1 "concealed" – means hidden from normal sight in furred spaces, shafts, ceiling spaces, walls and partitions.

.2 "exposed" – means work normally visible, including work in equipment rooms, service tunnels, and similar spaces.

.3 "finished" - means when in description of any area or part of an area or a product which receives a finish such as paint, or in case of a product may be factory finished.

.4 “provision” or "provide" (and tenses of "provide") – means supply and install complete.

.5 "install" (and tenses of "install") – means secure in position, connect complete, test, adjust, verify and certify.

.6 "supply" – means to procure, arrange for delivery to site, inspect, accept delivery and administer supply of products; distribute to areas; and include manufacturer’s supply of any special materials, standard on site testing, initial start-up, programming, basic commissioning, warranties and manufacturers’ assistance to Contractor.

.7 "delete" or "remove" (and tenses of "delete" or “remove”) – means to disconnect, make safe, and remove obsolete materials; patch and repair/finish surfaces to match adjoining similar construction; include for associated re-programming of systems and/or change of documentation identifications to suit deletions, and properly dispose of deleted products off site unless otherwise instructed by Owner and reviewed with Consultant.

.8 "barrier-free" – means when applied to a building and its facilities, that building and its facilities can be approached, entered and used by persons with physical or sensory disabilities in accordance with requirements of local governing building code.

.9 "BAS" – means building automation system; "BMS" – means building management system; "FMS" – means facility management system; and “DDC” means direct digital controls; references to "BAS", "BMS", "FMS" and “DDC” generally mean same.

.10 "governing authority" and/or "authority having jurisdiction" and/or "regulatory authority" and/or "Municipal authority" – means government departments, agencies, standards, rules and regulations that apply to and govern work and to which work must adhere.

.11 "OSHA" and "OHSA" – stands for Occupational Safety and Health Administration and Occupational Health and Safety Act, and wherever either one is used, they are to be read to mean local governing occupational health and safety regulations that apply to and govern work and to which work must adhere, regardless if Project falls within either authority's jurisdiction.

.12 "Mechanical Divisions" – typically, refers to Divisions 20, 21, 22, 23, 25 and other Divisions as specifically noted, and which work as defined in Specifications and/or on drawings is responsibility of Mechanical Contractor, unless otherwise noted.

.13 "Electrical Divisions" – typically, refers to Divisions 26, 27, 28 and other Divisions as specifically noted, and which work as defined in Specifications and/or on drawings is responsibility of Electrical Contractor, unless otherwise noted.

.14 Wherever words "indicated", "shown", "noted", "listed", or similar words or phrases are used in Contract Documents they are understood, unless otherwise defined, to mean product referred to is "indicated", "shown", "listed", or "noted" on Contract Documents.

.15 Wherever words "reviewed", "satisfactory", "as directed", "submit", or similar words or phrases are used in Contract Documents they are understood, unless otherwise defined, to mean that work or product referred to is "reviewed by", "to the satisfaction of", "submitted to", etc., Consultant.

## 1.04 DOCUMENTS

.1 Documents for bidding include but are not limited to issued Drawings, Specifications and Addenda.

.2 Specification is typically generally arranged in coordination with guidelines of Construction Specifications Institute/Canadian Specifications Canada (CSI/CSC) 50 Division MasterFormat.

.3 Drawings and Specifications are portions of Contract Documents and identify labour, products and services necessary for performance of work and form a basis for determining pricing. They are intended to be cooperative. Perform work that is shown, specified, or reasonably implied on the drawings but not mentioned in Specification, or vice-versa, as though fully covered by both.

.4 Review Drawings and Specifications in conjunction with documents of other Divisions and, where applicable, Code Consultant’s report.

.5 Unless otherwise specifically noted in Specifications and/or on Drawings, Sections of Mechanical Divisions are not intended to delegate functions nor to delegate work and supply of materials to any specific trade, but rather to generally designate a basic unit of work, and Sections are to be read as a whole.

.6 Drawings are performance drawings, diagrammatic, and show approximate locations of equipment and connecting services. Any information regarding accurate measurement of building is to be taken on site. Do not scale Drawings, and do not use Drawings for prefabrication work.

.7 Drawings are intended to convey the scope of work and do not show architectural and structural details. Provide, at your cost, offsets, fittings, transformations and similar products required as a result of obstructions and other architectural and/or structural details but not shown on Drawings.

.8 Locations of equipment and materials shown may be altered, when reviewed by Consultant, to meet requirements of equipment and/or materials, other equipment or systems being installed, and of building, all at no additional cost to Contract.

.9 Specification does not generally indicate specific number of items or amounts of material required. Specification is intended to provide product data and installation requirements. Refer to schedules, Drawings (layouts, riser diagrams, schematics, details) and Specification to provide correct quantities. Singular may be read as plural and vice versa.

.10 Starter/motor control centre (MCC)/variable frequency drive (VFD) schedule drawings are both mechanical and electrical, and apply to work of Mechanical Divisions and Electrical Divisions. Be responsible for reviewing starter, MCC, VFD, and motor specification requirements prior to Bid submission. Confirm and coordinate exact scope of work and responsibility of work between Mechanical Divisions and Electrical Divisions.

.11 If there is conflict or discrepancy between, among or within any provisions of Contract Documents, provisions establishing higher quality, manner or method of performing the Work, using more stringent standards, prevails, with intent that provisions which produce higher quality with higher levels of safety, reliability, durability, performance and service prevails.

.12 Generally, documents govern in following order:

.1 Specification.

.2 Drawings of larger scale.

.3 Drawings of smaller scale.

.4 Drawings of later date when scale of drawings is same.

.13 Upon finding discrepancies in, or omissions from Documents, or having doubt as to their meaning or intent, notify Consultant.

.14 Drawings and Specifications have been prepared solely for use by party with whom Consultant has entered into a contract and there are no representations of any kind made by Consultant to any other party.

## 1.05 EXAMINATION OF DOCUMENTS AND SITE

.1 Carefully examine Documents and visit site to determine and review existing site conditions that will or may affect work, and include for such conditions in Bid Price.

.2 Report to Consultant, prior to Bid Submittal, any existing site condition that will or may affect performance of work as per Documents. Failure to do so will not be grounds for additional costs.

.3 Upon finding discrepancies in, or omissions from Documents, or having doubt as to their meaning or intent, immediately notify Consultant, in writing.

## 1.06 WORK STANDARDS

.1 Where any code, regulation, bylaw, standard, contract form, manual, printed instruction, and installation and application instruction is quoted it means, unless otherwise specifically noted, latest published edition at time of submission of Bids adopted by and enforced by local governing authorities having jurisdiction. Include for compliance with revisions, bulletins, supplementary standards or amendments issued by local governing authorities.

.2 Where regulatory codes, standards and regulations are at variance with Drawings and Specification, more stringent requirement will apply unless otherwise directed by Owner and reviewed with Consultant.

.3 Supplementary mandatory specification and requirements to be used in conjunction with project include but are not limited to following:

.1 Air-Conditioning, Heating and Refrigeration Institute (AHRI);

.2 Air Movement and Control Association (AMCA);

.3 American Iron and Steel Institute (AISI);

.4 American National Standards Institute (ANSI);

.5 American Society of Heating, Refrigerating and Air Conditioning Engineers, Inc., (ASHRAE);

.6 American Society of Mechanical Engineers (ASME);

.7 American Society of Testing and Materials (ASTM);

.8 American Water Works Association (AWWA);

.9 Associated Air Balance Council (AABC);

.10 Building Industry Consulting Services, International (BICSI);

.11 Canadian Gas Association (CGA);

.12 Canadian General Standards Board (CGSB);

.13 Canadian Standards Association (CSA);

.14 Electrical and Electronic Manufacturers Association of Canada (EEMAC);

.15 Electrical Safety Authority (ESA);

.16 Electronic Industries Association (EIA);

.17 Factory Mutual Systems (FM);

.18 Illuminating Engineering Society (IES);

.19 Institute of Electrical and Electronic Engineers (IEEE);

.20 International Standards Organization (ISO);

.21 Intertek's Electrical Testing Labs (ETL);

.22 Manufacturers Standardization Society of the Valve and Fittings Industry, Inc. (MSS);

.23 National Building Code of Canada (NBC);

.24 National Electrical Manufacturers Association (NEMA);

.25 National Environmental Balancing Bureau (NEBB);

.26 National Fire Protection Association (NFPA);

.27 National Standards of Canada;

.28 NSF International;

.29 Occupational Health and Safety Act (OHSA);

.30 Ontario Building Code (OBC);

.31 Ontario Electrical Safety Code (OESC);

.32 Sheet Metal and Air Conditioning Contractors' National Association (SMACNA);

.33 Technical Standards and Safety Authority (TSSA);

.34 Thermal Insulation Association of Canada (TIAC);

.35 Underwriters' Laboratories of Canada (ULC);

.36 Workplace Hazardous Materials Information System (WHMIS);

.37 Safety Data Sheets by product manufacturers;

.38 local utility inspection permits;

.39 Codes, standards, and regulations of local governing authorities having jurisdiction;

.40 additional codes and standards listed in Trade Sections;

.41 Owner's standards.

.4 Provide applicable requirements for barrier free access in accordance with latest edition of local governing building code.

.5 Where any governing Code, Regulation, or Standard requires preparation and submission of special details or drawings for review they are to be prepared and submitted to appropriate authorities. Be responsible for costs associated with these submittals.

.6 Unless otherwise specified, install equipment in accordance with equipment manufacturer's recommendations and instructions, and requirements of governing Codes, Standards, and Regulations. Governing Codes, Standards, and Regulations take precedence over manufacturer's instructions. Notify Consultant in writing of conflicts between Contract Documents and manufacturer's instructions.

.7 Work is to be performed by journeyperson who perform only work that their certificates permit, or by apprentices under direct on site supervision of experienced journeyperson. Journeyperson to apprentice ratio is not to exceed ratio determined by the Board as stated in Ontario College of Trades and Apprenticeship Act or local equivalent governing body in Place of the Work.

.8 Journeypersons are to have a copy of valid trade certificates available at site for review with Consultant at any time.

.9 Experienced and qualified superintendent is to be on-site at times when work is being performed.

.10 Protect existing areas above, below and adjacent areas of Work from any debris, noise, or interruptions to existing services to satisfaction of Owner and reviewed with Consultant. Maintain in operation existing services to these areas to allow Owner to continue use of these areas. If services that are required to be maintained run through areas of renovations, provide necessary protection to services or reroute, in coordination with Owner and Consultant. Include for required premium time work to meet these requirements.

.11 Work being performed within occupied spaces and work affecting surfaces adjacent to occupied spaces may need to be performed after regular business hours. For areas where spaces are used by Owner on a 24 hours basis or over various hours, coordinate hours of work with Owner on a regular basis to suit Owner's schedule. Execute work at times confirmed with and agreed to by Owner and reviewed with Consultant, so as not to inconvenience Owner's occupation or in any way hinder Owner's use of building. Include for required premium time work to meet these requirements.

.12 Coordinate work inspection reviews and approvals with governing inspection department to ensure construction schedule is not delayed. Be responsible for prompt notification of deficiencies to Consultant and submission of reports and certificates to Consultant.

.13 Properly protect equipment and materials on site from damage and defacement due to elements and work of trades, to satisfaction of Owner and reviewed with Consultant. Equipment and materials are to be in new condition upon Substantial Performance of the Work.

.14 Mechanical piping system work, including equipment, must comply with requirements of local technical standards authorities and CSA B51, Boiler, Pressure Vessels and Pressure Piping Code. Where required, mechanical work products are to bear a Canadian Registration Number (CRN) number.

.15 Electrical items associated with mechanical equipment are to be certified and bear stamp or seal of a recognized testing agency such as CSA, UL, ULC, ETL, etc., or bear a stamp to indicate special electrical utility approval.

## 1.07 HEALTHCARE FACILITY STANDARDS

.1 Comply with following standards:

.1 CSA Z317.1, Special Requirements for Plumbing Installations in Health Care Facilities.

.2 CSA Z317.2, Special Requirements for Heating, Ventilation, and Air-Conditioning (HVAC) Systems in Health Care Facilities.

.3 CSA Z317.10, Handling of Health Care Waste Materials .

.4 CAN/CSA Z317.13, Infection Control During Construction, Renovation, and Maintenance of Health Care Facilities.

.5 CSA Z7396.1 Medical Gas Pipeline Systems - Part 1 Pipelines for Medical Gases, Medical Vacuum, Medical Support Gases, and Anaesthetic Gas Scavenging Systems.

.6 CSA Z8000, Canadian Health Care Facilities.

.7 CAN/CSA Z8001, Commissioning of Health Care Facilities.

.2 Prepare a list of areas of the work where infection control procedures are to be in force and review list and procedures with healthcare facility's Infection Control Officer or a designated healthcare facility representative prior to commencing work in aforementioned areas. As work proceeds, ensure infection control procedures are being maintained.

.3 Comply with healthcare facility's latest policies and procedures regarding infection prevention and decontamination measures during work of project. Refer to additional requirements of Division 01.

## 1.08 PERMITS, CERTIFICATES, APPROVALS AND FEES

.1 Contact and confirm with local authorities having jurisdiction including utility providers, requirements for approvals from such authorities. Obtain and pay for permits, certificates, and approvals required to complete Work.

.2 Be responsible for ensuring that authorities having jurisdiction which require on-site inspection of work, have ample notification to perform inspection, with sufficient lead time to correct deficiencies in a manner that will not impede schedule of completion of Work. If any defect, deficiency or non-compliant is found in work by inspection, be responsible for costs of such inspection, including any related expenses, making good and return to site, until work is passed by governing authorities.

.3 Obtain and submit to Consultant, approval/inspection certificates issued by governing authorities to confirm that Work as installed is in accordance with rules and regulations of local governing authorities and are acceptable.

.4 Include in each copy of operating and maintenance instruction manuals, copies of approvals and inspection certificates issued by regulatory authorities.

## 1.09 REQUIREMENTS FOR CONTRACTOR RETAINED ENGINEERS

.1 Professional engineers retained to perform consulting services with regard to Project work, i.e. seismic engineer, fire protection engineer or structural engineer, are to be legally qualified to practice professional engineering in the Place of the Work, and are to carry and pay for errors and omissions professional liability insurance in compliance with requirements of governing authorities in Place of the Work.

.2 Retained engineer's professional liability insurance is to protect Contractor's consultants and their respective servants, agents, and employees against any loss or damage resulting from professional services rendered by aforementioned consultants and their respective servants, agents, and employees in regards to the Work of this Contract.

.3 Unless otherwise specified in Division 00 or 01, liability insurance requirements are as follows:

.1 coverage is to be a minimum of $1,000,000.00 CDN inclusive of any one occurrence;

.2 insurance policy is not to be cancelled or changed in any way without insurer giving Owner minimum thirty days written notice;

.3 liability insurance is to be obtained from an insurer registered and licensed to underwrite such insurance in the Place of the Work;

.4 retained consultants are to ascertain that sub-consultants employed by them carry insurance in the form and limits specified above;

.5 evidence of the required liability insurance in such form as may be required is to be issued to Owner, Owner's Consultant, and Municipal Authorities as required prior to commencement of aforementioned consultant's services.

## 1.10 WORKPLACE SAFETY

.1 Comply with requirements of Workplace Hazardous Materials Information System (WHMIS) regarding use, handling, storage and disposal of hazardous materials. Submit WHMIS SDS (Safety Data Sheets) for products where required, and maintain one copy at site in a visible and accessible location available to personnel.

.2 Comply with requirements of Occupational Health and Safety Act and other regulations pertaining to health and safety, including worker's compensation/insurance board and fall protection regulations. When working in confined spaces, comply with requirements of Occupational Health and Safety Act - Ontario Regulation 632, "Confined Spaces" and any other applicable Ministry of Labour requirements.

.3 If at any time during course of existing building work, hazardous materials other than those identified in Documents and pertaining to Project Scope of Work, are encountered or suspected that were not identified as being present and which specific instructions in handling of such materials were not given, cease work in area in question and immediately notify Consultant. Comply with local governing regulations with regards to working in areas suspected of containing hazardous materials. Do not resume work in affected area without approval from Owner and reviewed with Consultant.

## 1.11 PLANNING AND LAYOUT OF WORK

.1 Base installation layout, design, terminations, and supply of accessories, on Contract Documents with specific coordination with reviewed shop drawings.

.2 Plan, coordinate, and establish exact locations and routing of services with affected trades prior to installation such that services clear each other as well as other obstructions. Generally, as coordinated prior to start of Work with each trade and with Owner and reviewed with Consultant, to suit specific project requirements, order of right of way for services to be as follows:

.1 piping requiring uniform pitch;

.2 piping 100 mm (4") dia. and larger;

.3 large ducts (main runs);

.4 cable tray and bus duct;

.5 conduit 100 mm (4") dia. and larger;

.6 piping less than 100 mm (4") dia.;

.7 smaller branch ductwork;

.8 conduit less than 100 mm (4") dia..

.3 Unless otherwise shown or specified, conceal work in finished areas, and conceal work in partially finished and/or unfinished areas to extent made possible by the area construction. Install services as high as possible to conserve headroom and/or ceiling space. Notify Consultant where headroom or ceiling space appears to be inadequate prior to installation of work.

.4 Do not use Contract Drawing measurements for prefabrication and layout of piping, sheet metal work and such other work. Locations and routing are to generally be in accordance with Contract Drawings, however, prepare layout drawings for such work. Use established bench marks for both horizontal and vertical measurements. Confirm inverts, coordinate with and make allowances for work of other trades. Accurately layout work, and be entirely responsible for work installed in accordance with layout drawings. Where any invert, grade, or size is at variance with Contract Drawings, notify Consultant prior to proceeding with work.

.5 Prepare plan and interference drawings (at a minimum drawing scale of 1:50 or ¼"=1' 0") of work for coordination with each trade Contractor. Arrange for preparation of detailed section drawings of ceiling spaces of corridors and any other congested areas. Sections are to be cross referenced with plan drawings so that trades may make use of section drawings. Section drawings to indicate lateral and elevation dimensions of major services within ceiling space. Lateral dimensions are to be from grid lines and elevations from top of floor slab. Obtain from Consultant, engineering drawings for this use. Contractors' interference drawings are to be distributed among other Trade Contractors. Submit drawings to Consultant for review. Failure of General Contractor to prepare and coordinate overall interface drawings of trades does not relieve respective Division Contractor of responsibility to ensure that work is properly planned and coordinated.

.6 Carry out alterations in arrangement of work that has been installed without proper coordination, study, and review, even if in accordance with Contract Documents, in order to conceal work behind finishes, or to allow installation of other work, without additional cost. In addition, make necessary alterations in other work required by such alterations, without additional cost.

.7 Locate shut-off valves, balancing devices, air vents, equipment and similar products, particularly such products located above suspended ceilings, for easy access for servicing and/or removal. Relocate products which do not meet this location requirement to accessible location, at no additional cost.

.8 Be responsible for making necessary changes, at no additional cost, to accommodate structural and building conditions that were missed due to lack of coordination.

.9 Where drawings indicate that acoustic tile ceiling is being suspended below structural ceiling, coordinate design of framework used to support suspended ceiling, diffusers, and other Divisions components that are mounted within or through ceiling. Do not mount devices to suspended ceiling. Secure and mount to ceiling slab above. Seal ceiling openings to maintain required fire rating.

## 1.12 COORDINATION OF WORK

.1 Review Contract Documents and coordinate work with work of each trade. Coordination requirements are to include but not be limited to following:

.1 requirements for openings, sleeves, inserts and other hardware necessary for installation of work;

.2 concrete work such as housekeeping pads, sumps, bases, etc., required for work, and including required dimensions, operating weight of equipment, location, etc.;

.3 depth and routing of excavation required for work, and requirements for bedding and backfill;

.4 wiring work required for equipment and systems but not specified to be done as part of mechanical work, including termination points, wiring type and size, and any other requirements.

.2 Ensure materials and equipment are delivered to site at proper time and in such assemblies and sizes so as to enter into building and be moved into spaces where they are to be located without difficulty.

.3 Wherever possible, coordinate equipment deliveries with manufacturers and/or suppliers so equipment is delivered to site when it is required, or so it can be stored within building, subject to available space as confirmed with Owner and reviewed with Owner, and protected from elements.

.4 Ensure proper access and service clearances are maintained around equipment, and, where applicable, access space for future equipment removal or replacement is not impeded. Comply with code requirements with regards to access space provision around equipment. In coordination with Owner and review with Consultant, relocate equipment which does not meet this requirement.

.5 Where work is to be integrated, or is to be installed in close proximity with work of other trades, coordinate work prior to and during installation.

## 1.13 PRODUCTS

.1 Order products (equipment and materials) in a timely manner to meet project-scheduling timelines. Failure to order products to allow manufacturers sufficient production/delivery time to meet project-scheduling timelines is unacceptable reason to request for use of other suppliers or substitutions.

.2 Provide Canadian manufactured products wherever possible or required and when quality and performance is obtainable at a competitive price. Products are to be supplied from manufacturer’s authorized Canadian representative, unless otherwise noted. Unless otherwise specified, products are to be new.

.3 Products are to comply with applicable respective Canadian standards, and typically with Canadian Standards Association (CSA) approvals and/or Underwriters Laboratories of Canada (ULC) listings markings. References to UL listings of products to include requirements that products are to be also Underwriters Laboratories of Canada ULC / cUL listed for use in Canada. Other certification organizations accredited by Standards Council of Canada to approve electrical equipment may be acceptable subject to approval from local governing electrical authority and review with Consultant. Applicable products are to meet or exceed latest ANSI/ASHRAE/IES 90.1 standards enforced by local governing authorities.

.4 Systems and equipment of this Project are to be "State of the Art" and be most recent and up to date series/version of product that is available at time of shop drawing review process. Products that have been stored or "on shelf" for an extended period of time will not be accepted. Software is to be of latest version available and be provided with updates available at time of shop drawing review process. Systems are to be designed such that its software is backwards compatible. Future upgrades are not to require any hardware replacements or additions to utilize latest software.

.5 Products scheduled and/or specified have been selected to establish a performance and quality standard, and, in some instances, a dimensional standard. In most cases, base specified manufacturers are stated for any product specified by manufacturer’s name and model number. Where acceptable manufacturers are listed, first name listed is base specified company. Bid Price may be based on products supplied by any of manufacturers’ base specified or named as acceptable for particular product. If acceptable manufacturers are not stated for a particular product, base Bid Price on product supplied by base specified manufacturer.

.6 Documents have been prepared based on product available at time of Bidding. If, after award of Contract, and if successful manufacturer can no longer supply a product that meets base specifications, notify Consultant immediately. Be responsible for obtaining other manufacturers product that complies with base specified performance and criteria and meets project timelines. Proposed products are subject to review and consideration by Consultant and are considered as substitutions subject to a credit to Contract. In addition, if such products require modifications to room spaces, mechanical systems, electrical systems, etc., include required changes. Such changes are to be submitted in detail to Consultant for review and consideration for acceptance. There will be no increase in Contract Price for revisions. Above conditions supplement and are not to supersede any specification conditions with regards to substitutions or failure to supply product as per issued documents.

.7 Listing of a product as "acceptable" does not imply automatic acceptance by Consultant and/or Owner. It is responsibility of Contractor to ensure that any price quotations received and submittals made are for products that meet or exceed specifications included herein.

.8 If products supplied by a manufacturer named as acceptable are used in lieu of base specified manufacturer, be responsible for ensuring that they are equivalent in performance and operating characteristics (including energy consumption if applicable) to base specified products. It is understood that any additional costs (i.e. for larger starters, larger feeders, additional spaces, etc.), and changes to associated or adjacent work resulting from provision of product supplied by a manufacturer other than base specified manufacturer, is included in Bid Price. In addition, in equipment spaces where equipment named as acceptable is used in lieu of base specified equipment and dimensions of such equipment differs from base specified equipment, prepare and submit for review accurately dimensioned layouts of rooms affected, identifying architectural and structural elements, systems and equipment to prove that equipment in room will fit properly meeting design intent. There will be no increase in Contract Price for revisions.

.9 Where products are listed as "or approved equal", certify in writing that product to be used in lieu of base specified product, at least meets space, power, design, energy consumption, and other requirements of base specified product and is equivalent or better than base specified product. When requested by Consultant, provide full design detail drawings and specifications of proposed products. Acceptance of these "or approved equal" products is at sole discretion of Consultant. It is understood that there will be no increase in Contract Price by reason of any changes to associated equipment, mechanically, electrically, structurally or architecturally, required by acceptance of approved equal product. There must be no increase in Contract price due to Consultant's rejection of proposed equivalent product.

.10 Whenever use of product other than base specified product is being supplied, ensure corresponding certifications and product information (detailed catalogue and engineering data, fabrication information and performance characteristics) are submitted to Consultant for review. Failure of submission of these documents to Consultant in a timely manner to allow for review will result in base specified product to be supplied at Consultant's discretion, at no additional cost to Contract.

.11 In addition to manufacturer's products base specified or named as acceptable, other manufacturers of products may be proposed as substitutions to Consultant for review and consideration for acceptance, listing in each case a corresponding credit for each substitution proposed. However, base Bid Price on products base specified or named as acceptable. Certify in writing to Consultant that proposed substitution meets space, power, design, energy consumption, and other requirements of base specified or acceptable product. It is understood that there will be no increase in Contract Price by reason of any changes to associated equipment, mechanically, electrically, structurally or architecturally, required by acceptance of proposed substitution. Consultant has sole discretion in accepting any such proposed substitution of product. Indicate any proposed substitutions in areas provided on Bid Form. Do not order such products until they are approved by Owner and reviewed in writing with and recommended for acceptance by Consultant.

.12 Substitutions will not be considered by Consultant during Bid period unless:

.1 permitted by Owner;

.2 directions and submission areas are provided on Bid Form;

.3 or formally requested in writing a minimum of 10 working days prior to Bid closing date.

.13 When issued with Documents, complete and submit as directed, Appendix - List of Acceptable Manufacturers and Suppliers, or when directed by Consultant submit separate list of proposed manufacturers and suppliers.

.14 Any proposed changes to list of manufacturers initiated by Contractor after award of Contract may be considered by Consultant at Consultant's discretion, with any additional costs for such changes if approved by Owner and reviewed with and recommended by Consultant, and costs for review, to be borne by Contractor.

.15 Whenever use of product other than based specified products or named as acceptable is being supplied, allow sufficient time for processing of product submissions and time for Consultant's review, such that there will not be significant impact on contract time or work schedule.

## 1.14 SHOP DRAWINGS

.1 At start-up meeting, review with Consultant products to be included in shop drawing submission. Prepare and submit list of products to Consultant for review.

.2 Submit electronic copies of shop drawings unless otherwise directed by Consultant. Coordinate exact requirements with Consultant.

.3 Submit for review, drawings showing detail design, construction, and performance of equipment and materials as requested in Specification. Submit shop drawings to Consultant for review prior to ordering and delivery of product to site. Include minimally for preparation and submission of following, as applicable:

.1 product literature cuts;

.2 equipment data sheets;

.3 equipment dimension drawings;

.4 system block diagrams;

.5 sequence of operation;

.6 connection wiring schematic diagrams;

.7 functionality with integrated systems.

.4 Each shop drawing or product data sheet is to be properly identified with project name and product drawing or specification reference. Shop drawing or product data sheet dimensions are to match dimension type on drawings.

.5 Where any item of equipment is required by Code or Standard or By-Law to meet a specific energy efficiency level, or any other specific requirement, ensure this requirement is clearly indicated on submission.

.6 Ensure proposed products meet each requirement of Project. Endorse each shop drawing copy "CERTIFIED TO BE IN ACCORDANCE WITH ALL REQUIREMENTS". Include company name, submittal date, and sign each copy. Shop drawings that are received and are not endorsed, dated and signed will be returned to be resubmitted.

.7 Consultant to review shop drawings and indicate review status by stamping shop drawing copies as follows:

.1 "REVIEWED" or "REVIEWED AS NOTED" (appropriately marked) – If Consultant's review of shop drawing is final, Consultant to stamp shop drawing;

.2 "REVISE & RESUBMIT" – If Consultant's review of shop drawing is not final, Consultant to stamp shop drawing as stated above, mark submission with comments, and return submission. Revise shop drawing in accordance with Consultant's notations and resubmit.

.8 Following is to be read in conjunction with wording on Consultant's shop drawing review stamp applied to each and every shop drawing or product data sheet submitted:

"THIS REVIEW BY CONSULTANT IS FOR SOLE PURPOSE OF ASCERTAINING CONFORMANCE WITH GENERAL DESIGN CONCEPT. THIS REVIEW DOES NOT MEAN THAT CONSULTANT APPROVES DETAILED DESIGN INHERENT IN SHOP DRAWINGS, RESPONSIBILITY FOR WHICH REMAINS WITH CONTRACTOR. CONSULTANT'S REVIEW DOES NOT RELIEVE CONTRACTOR OF RESPONSIBILITY FOR ERRORS OR OMISSIONS IN SHOP DRAWINGS OR OF CONTRACTOR'S RESPONSIBILITY FOR MEETING REQUIREMENTS OF CONTRACT DOCUMENTS. BE RESPONSIBLE FOR DIMENSIONS TO BE CONFIRMED AND CORRELATED AT JOB SITE, FOR INFORMATION THAT PERTAINS SOLELY TO FABRICATION PROCESSES OR TO TECHNIQUES OF CONSTRUCTION AND INSTALLATION, AND FOR COORDINATION OF WORK OF SUB-TRADES."

.9 Submit each system and each major component as separate shop drawing submissions. Submit together, shop drawings for common devices such as devices of each system are to be submitted together.

.10 Obtain shop drawings for submission from product manufacturer's authorized representatives and supplemented with additional items specified herein.

.11 Do not order product until respective shop drawing review process has been properly reviewed with Consultant.

.12 Where extended warranties are specified for equipment items, submit specified extended warranty with shop drawing submittal.

.13 Refer to specific requirements in other Sections.

## 1.15 ENGINEERED SUBMITTALS

.1 Submittals for items required to be sealed by a professional engineer (engineered) are to be duly prepared, sealed, and signed under direct control and supervision of a qualified professional engineer licensed in jurisdiction of the work. Professional engineer is to conform to requirements specified in this Section in article entitled Requirements for Contractor Retained Engineers.

.2 Engineered submittals are to include, but not be limited to, following:

.1 complete CAD layout drawings indicating equipment, piping schematic, pipe routing and sizing, zones, devices, wiring schematics, and any other pertinent data;

.2 listing of design data used to determine system layout and sizing;

.3 complete copies of design calculations and listing of design data used in preparing calculations;

.4 list detailing standards, codes, regulations, etc. adhered to when designing system;

.5 items as noted in other Sections of the Specification.

.3 Professional engineer responsible for engineered submittals is to perform periodic field reviews, including review of associated mock-ups where applicable, at locations wherever work as described by engineered submittal is in progress, during fabrication and installation of such work, and submit a field review report after each visit. Submit field review reports to Consultant and authorities having jurisdiction as required.

.4 Field reviews are to be at intervals as necessary and appropriate to progress of work described by engineered submittal to allow engineer to be familiar with progress and quality of such work and to determine if work is proceeding in general conformity with Contract Documents including reviewed shop drawings and design calculations.

.5 Upon completion of work as described by engineered submittal, professional engineer responsible for preparation of engineered submittal and for performing periodic field reviews is to prepare and submit to Consultant and, if applicable, authorities having jurisdiction, a letter certifying that work has been supplied and installed in accordance with requirements of Contract Documents, authorities having jurisdiction and engineered submittal.

## 1.16 EQUIPMENT LOADS

.1 Supply equipment loads (self-weight, operating weight, housekeeping pad, inertia pads, etc.) to Consultant, via shop drawing submissions, prior to construction.

.2 Where given choice of specific equipment, actual weight, location and method of support of equipment may differ from those assumed by Consultant for base design. Back-check equipment loads, location, and supports, and include necessary accommodations.

.3 Where supporting structure consists of structural steel framing, it is imperative that equipment loads, location, and method of support be confirmed prior to fabrication of structural steel. Review locations of equipment with Consultant prior to construction.

## 1.17 OPENINGS

.1 Supply opening sizes and locations to Consultant to allow verification of their effect on design, and for inclusion on structural drawings where appropriate.

.2 No openings are permitted through completed structure without written approval from Owner and reviewed with Consultant. Show required openings on a copy of structural drawings. Identify exact locations, elevations, and size of proposed openings and submit to Consultant for review, well in advance of doing work.

.3 Prior to leaving site at end of each day, walk through areas of work and check for any openings, penetrations, holes, and/or voids created under scope of work of project, and ensure that any openings created under scope of work have been closed off, fire-stopped and smoke-sealed. Unless otherwise directed by Owner and reviewed with Consultant, do not leave any openings unprotected and unfinished overnight.

## 1.18 SCAFFOLDING, HOISTING AND RIGGING

.1 Unless otherwise specified or directed, supply, erect and operate scaffolding, rigging, hoisting equipment and associated hardware required for work, and subject to approval from Owner and reviewed with Consultant.

.2 Use scaffolds in such a manner as to interfere as little as possible with work of other trades.

.3 Do not place major scaffolding/hoisting equipment loads on any portion of structure without approval from Owner and reviewed with Consultant. No supports, clips, brackets or similar devices are to be welded, bolted or otherwise affixed to any finished member or surface without approval from Owner and review with Consultant.

.4 Immediately remove from site scaffolding, rigging and hoisting equipment when no longer required.

## 1.19 CHANGES IN THE WORK

.1 Whenever Consultant proposes in writing to make a change or revision to design, arrangement, quantity or type of work from that required by Contract Documents, prepare and submit to Consultant for review, a quotation detailing proposed cost for executing change or revision.

.2 Quotation is to be a detailed and itemized estimate of product, labour, and equipment costs associated with change or revision, plus overhead and profit percentages and applicable taxes and duties.

.3 If overhead and profit percentages are not specified in Division 00 or 01, but allowable under Contract as reviewed with Consultant prior to contract signing, then allowable maximum percentages for overhead and profit are to be 5% for each.

.4 Unless otherwise specified in Divisions 00 or 01, following additional requirements apply to all quotations submitted:

.1 when change or revision involves deleted work as well as additional work, cost of deleted work (less overhead and profit percentages but including taxes and duties) is to be subtracted from cost of additional work before overhead and profit percentages are applied to additional work;

.2 material costs are not to exceed those published in local estimating price guides;

.3 mechanical labour unit costs are to be in accordance with Mechanical Contractors Association of America Labor Estimating Manual, less 25%;

.4 electrical labour unit costs are to be in accordance with National Electrical Contractors Association Manual of Labor Units at difficult level, less 25%;

.5 costs for journeyperson and apprentice labour must not exceed prevailing rates at time of execution of Contract and must reflect actual personnel performing work;

.6 cost for site superintendent must not exceed 10% of total hours of labour estimated for change or revision, and change or revision must be such that site superintendent’s involvement is necessary;

.7 costs for rental tools and/or equipment are not to exceed local rental costs;

.8 overhead percentage will be deemed to cover quotation costs other than actual site labour and materials, and rentals;

.9 quotations, including those for deleted work, to include a figure for any required change to Contract time.

.5 Quotations submitted that are not in accordance with requirements specified above will be rejected and returned for re-submittal. Failure to submit a proper quotation to enable Consultant to expeditiously process quotation and issue a Change Order will not be grounds for any additional change to Contract time.

.6 Make requests for changes or revisions to work in writing to Consultant and, if accepted by Owner, Notice of Change or Change Directive to be issued.

.7 Do not execute any change or revision until written authorization for the change or revision has been obtained from Consultant.

## 1.20 PROGRESS PAYMENT BREAKDOWN

.1 Prior to submittal of first progress payment draw, submit a detailed breakdown of work cost to assist Consultant in reviewing and approving progress payment claims.

.2 Payment breakdown is subject to Owner’s approval and Consultant’s review and recommendations. Progress payments will not be processed until an approved breakdown is in place. Breakdown is to include one-time claim items such as mobilization and demobilization, insurance, bonds (if applicable), shop drawings and product data sheets, commissioning including testing, adjusting and balancing, system testing and verification, and project closeout submittals.

.3 Indicate equipment, material and labour costs for site services (if applicable) and indicate work of each trade in same manner as indicated on progress draw.

## 1.21 NOTICE FOR REQUIRED FIELD REVIEWS

.1 Whenever there is a requirement for Consultant to perform a field review prior to concealment of any work, to inspect/re-inspect work for deficiencies prior to Substantial Performance of the Work, for commissioning demonstrations, and any other such field review, give minimum 7 working days' notice in writing to Consultant.

.2 If Consultant is unable to attend a field review when requested, arrange an alternative date and time.

.3 Do not conceal work until Consultant advises that it may be concealed.

.4 When Consultant is requested to perform a field review and work is not ready to be reviewed, reimburse Consultant for time and travel expenses.

## 1.22 PRELIMINARY TESTING

.1 When directed by Consultant, promptly arrange, pay for, and perform site tests on any piece of equipment or any system for such reasonable lengths of time and at such times as may be required to prove compliance with Specification and governing Codes and Regulations, prior to Substantial Performance of the Work.

.2 When, in Consultant's opinion, tests are required to be performed by a certified testing laboratory, arrange and pay for such tests.

.3 These tests are not to be construed as evidence of acceptance of work, and it is agreed and understood that no claim for delays or damage will be made for injury or breakage to any part or parts of equipment or system due to test where such injuries or breakage were caused by faulty parts and/or workmanship of any kind.

.4 When, in Consultant's opinion, tests indicate that equipment, products, etc., are defective or deficient, immediately remove such equipment and/or products from site and replace them with acceptable equipment and/or products, at no additional cost.

## 1.23 MAINTAINING EQUIPMENT PRIOR TO ACCEPTANCE

.1 Maintain equipment in accordance with manufacturer's instructions prior to start-up, testing and commissioning.

.2 Employ a qualified millwright to check and align shafts, drives, and couplings on all base mounted split coupled motor driven equipment.

.3 Where equipment lubrication fittings are not easily accessible, extend the fittings to accessible locations using copper or aluminium tubing.

.4 All filters are to be new upon Substantial Performance of the Work. This is in addition to any spare filters specified.

## 1.24 CLEANING

.1 During construction, keep site reasonably clear of rubbish and waste material resulting from work on a daily basis to the satisfaction of Owner and Consultant. Before applying for a Certificate of Substantial Performance of the Work, remove rubbish and debris, and be responsible for repair of any damage caused as a result of work.

.2 Clean equipment and devices installed as part of this project.

## 1.25 RECORD AS-BUILT DRAWINGS

.1 Drawings for this project have been prepared on a CAD system using AutoCAD software of release version reviewed with Consultant.

.2 As work progresses at site, clearly mark in red in a neat and legible manner on a set of bound white prints of Contract Drawings, changes and deviations from routing of services and locations of equipment shown on Contract Drawings, on a daily basis. Changes and deviations include those made by addenda, change orders, and site instructions. Use notes marked in red as required. Maintain white print red line as-built set at site for exclusive use of recording as-built conditions, keep set up-to-date at all times, and ensure set is always available for periodic review. As-built set is also to include the following:

.1 dimensioned location of inaccessible concealed work;

.2 locations of control devices with identification for each;

.3 for underground piping and ducts, record dimensions, invert elevations, offsets, fittings, cathodic protection and accessories if applicable, and locate dimensions from benchmarks to be preserved after construction is complete;

.4 for fire protection systems, record actual locations of equipment, sprinkler heads, and valves, drains, and test locations, and deviations of pipe routing and sizing from that shown on the drawings;

.5 location of piping system air vents;

.6 location of concealed services terminated for future extension and work concealed within building in inaccessible locations.

.3 Before applying for a Certificate of Substantial Performance of the Work, update a clean copy of Contract Drawing set in accordance with marked up set of "as-built" white prints including deviations from original Contract Drawings, thus forming an "as-built" drawing set. Submit "as-built" site drawing prints to Consultant for review. Make necessary revisions to drawings as per Consultant's comments, to satisfaction of Consultant.

.4 Use final reviewed "as-built" drawing set to provide CAD files of drawings thus forming true "as-built" set of Contract Drawings. Identify set as "Project Record Copy". Load digital copies of final reviewed by Consultant as-built drawings onto USB type flash drive. Provide 2 complete sets of "as-built" drawings on separate USBs. Submit "as-built" sets of white prints and USBs to Consultant. Save drawings as AutoCAD files and in pdf format and such that each drawing is not x-referenced but as complete drawing.

.5 Submitted drawings are to be of same quality as original Contract Drawings. CAD drawing files are to be compatible with software release version reviewed with Consultant.

.6 Unless otherwise noted in Divisions 00 or 01, failure to maintain accurate record drawings will incur additional 5% holdback on progress claims until drawings are brought up to date to satisfaction of Owner and reviewed with Consultant.

## 1.26 OPERATING AND MAINTENANCE MANUALS

.1 For each item of equipment for which a shop drawing is required (except for simple equipment), supply minimum 3, project specific, indexed copies of equipment manufacturers' operating and maintenance (O & M) manuals. Review exact quantity of manuals with Consultant. Consolidate each copy of data in an identified hard cover three "D" ring binder. Each binder to include:

.1 front cover: project name; wording – "Mechanical Systems Operating and Maintenance Manual"; and date;

.2 introduction sheet listing Consultant, Contractor, and Subcontractor names, street addresses, telephone and fax numbers, and e-mail addresses;

.3 equipment manufacturer's authorized contact person name, telephone number and company website;

.4 Table of Contents sheet, and corresponding index tab sheets;

.5 copy of each "REVIEWED" or clean, updated "REVIEWED AS NOTED" shop drawing or product data sheet, with manufacturer's/supplier's name, telephone and fax numbers, email address, company website address, and email address for local source of parts and service; when shop drawings are returned marked "Reviewed As Noted" with revisions marked on shop drawing copies, they are to be revised by equipment supplier to incorporate comments marked on "Reviewed" shop drawings and a clean updated copy is to be included in operating and maintenance manuals;

.6 operating data as follows:

.1 pressure test reports, and certificates issued by governing authorities;

.2 description of each system and its controls;

.3 control schematics for equipment/systems including building environmental controls;

.4 wiring and connection diagrams;

.5 if applicable, BAS architecture and required operating data;

.6 description of operation of each system at various loads together with reset schedules and seasonal variances;

.7 operation instruction for each system and each component;

.8 description of actions to be taken in event of emergencies and/or equipment failure;

.9 valve tag schedule, and flow diagrams to indicate valve locations.

.7 maintenance data as follows:

.1 operation and trouble-shooting instructions for each item of equipment and each system;

.2 schedules of tasks, frequency, tools required, and estimated task time;

.3 recommended maintenance practices and precautions including warnings of any maintenance practice that will damage or disfigure equipment/systems;

.4 complete parts lists with numbers.

.8 performance data as follows:

.1 equipment and system start-up data sheets;

.2 equipment performance verification test results, and final commissioning report;

.3 final testing, adjusting and balancing reports.

.9 copies of warranties;

.10 items requested specifically in Section Articles.

.2 Generally, binders are not to exceed 75 mm (3") thick and not to be more than 2/3 full.

.3 Operating and maintenance instructions are to relate to job specific equipment supplied under this project and related to Owner’s building. Language used in manuals is to contain simple practical operating terms and language easy for in-house maintenance staff to understand how to operate and maintain each system.

.4 Before applying for a Certificate of Substantial Performance of the Work, assemble one copy of O&M Manual and submit to Consultant for review prior to assembling remaining copies. Incorporate Consultant's comments into final submission.

## 1.27 COMMISSIONING

.1 After successful start-up and prior to Substantial Performance of the Work, commission the mechanical work. Commissioning work is the process of Contractor demonstrating to Owner and Consultant, for purpose of final acceptance, by means of successful and documented functional performance testing, that systems and/or subsystems are capable of being operated and maintained to perform in accordance with requirements of Contract Documents, as further described below.

.1 Retain services of a testing, adjusting, and balancing agency to perform testing and balancing of mechanical system air/fluid flows and capacities, prior to operational performance testing. Refer to Section entitled Testing, Adjusting and Balancing.

.2 Test, adjust and operate equipment and systems after start-up but before functional performance testing, to confirm operations are in accordance with requirements of Contract Documents. Verify modes and sequences of control and monitoring, interlocks, and responses to emergency conditions. Complete commissioning data sheets to document successful operational performance testing.

.3 Repeat successful operational performance testing with completed commissioning data sheet documentation in the presence of Consultant and Owner to validate and verify equipment and systems are complete in all respects, function correctly, and are ready for acceptance.

.4 Submit final commissioning data sheets, TAB reports as specified in Section entitled Testing, Adjusting and Balancing, project closeout documents, and other required submittals.

## 1.28 PROJECT CLOSEOUT SUBMITTALS

.1 Prior to application for Substantial Performance of the Work, submit required items and documentation specified, including following:

.1 O & M Manuals;

.2 as-built record drawings and associated data;

.3 extended warranties for equipment as specified;

.4 operating test certificates, i.e. Sprinkler Test Certificate;

.5 final commissioning report and TAB report;

.6 identified keys for equipment and/or panels for which keys are required, and other items required to be submitted;

.7 other data or products specified.

.2 Refer to additional requirements in Division 01.

## 1.29 FINAL INSPECTION

.1 Submit to Consultant, written request for final inspection of systems. Include written certification that:

.1 deficiencies noted during job inspections have been completed;

.2 field quality control procedures have been completed;

.3 systems have been tested and verified, balanced and adjusted, and are ready for operation;

.4 maintenance and operating data have been completed and submitted to, reviewed with Consultant and accepted by Owner;

.5 tags and nameplates are in place and equipment identifications have been completed;

.6 clean-up is complete;

.7 spare parts and replacement parts specified have been provided, as confirmed by Owner and reviewed with Consultant;

.8 as-built and record drawings have been completed and submitted to and reviewed with Consultant and accepted by Owner;

.9 Owner's staff has been instructed in operation and maintenance of systems;

.10 commissioning procedures have been completed.

**2 PRODUCTS**

**2.01 NOT USED**

**3 EXECUTION**

**3.01 NOT USED**

**END OF SECTION**

# 1 GENERAL

## 1.01 REFERENCE

.1 Division 00 and Division 01 apply to and are a part of each Mechanical Division Section.

## 1.02 APPLICATION

.1 This Section specifies products, criteria and characteristics, and methods and execution that are common to one or more Sections of Mechanical Divisions. It is intended as a supplement to each Section and is to be read accordingly.

.2 Advise product vendors of requirements of this Section.

## 1.03 SUBMITTALS

.1 Submit shop drawings/product data sheets for:

.1 pressure gauges and thermometers;

.2 electric motors (submit with equipment they are associated with).

.2 Submit weight loads for selected equipment (upon request).

.3 Submit copy of architectural reflected ceiling plan drawings and elevation drawings to indicate proposed access door locations.

# 2 PRODUCTS

## 2.01 FIRESTOPPING AND SMOKE SEAL MATERIALS

.1 Firestopping and smoke seal system materials for mechanical penetrations through fire rated construction are specified in Division 07 and work will be included as part of work of Division 07.

.2 Firestopping and smoke seal system materials for mechanical penetrations through fire rated construction are specified in Section entitled Firestopping and Smoke Seal Systems and work is to be included as part of mechanical work.

## 2.02 PIPE ESCUTCHEON PLATES

.1 One-piece chrome plated brass or #4 finish type 302 stainless steel plates with matching screws for attachment to building surface, each plate sized to completely cover pipe sleeve or building surface opening, and to fit tightly around pipe or pipe insulation.

## 2.03 PIPING HANGERS AND SUPPORTS

.1 Pipe hanger and support materials, including accessories, are to be, unless otherwise specified, in accordance with Manufacturers Standardization Society (MSS) Standard Practice Manual SP-58, Pipe hangers and Supports-Materials, Design and Manufacture, and where possible, MSS designations are indicated with each product specified below. Conform to following requirements:

.1 unless otherwise specified, ferrous hanger and support products are to be electro-galvanized;

.2 hangers and supports for insulated piping are to be sized to fit around insulation and insulation jacket.

.2 Hangers and supports for horizontal suspended piping as follows:

.1 adjustable steel clevis hanger – MSS Type 1;

.2 adjustable swivel ring band hanger – MSS Type 10;

.3 adjustable roller hanger – MSS Types 41, 43, and/or 45, with MSS Type 39 steel protection saddle.

.3 Supports for horizontal pipe on vertical surfaces as follows:

.1 steel offset pipe clamp – Anvil Fig. 103 or Myatt Fig. 170;

.2 heavy-duty steel pipe clip – MSS Type 26;

.3 single steel pipe hook – Myatt Fig. 156;

.4 epoxy coated steel pipe stays are not permitted.

.4 Floor supports for vertical risers as follows:

.1 copper tubing riser clamp – MSS Type 8;

.2 heavy-duty steel riser clamp – MSS Type 8.

.5 Supports for vertical piping on vertical surfaces as follows:

.1 steel offset pipe clamp – Anvil Fig. 103 or Myatt Fig. 170;

.2 heavy-duty steel pipe bracket or soil pipe bracket – MSS Type 26;

.3 extension split pipe clamp – MSS Type 12;

.4 epoxy coated steel pipe stays are not permitted.

.6 Special hangers and supports for various applications as follows:

.1 for sections of piping connected to vibration isolated equipment – hangers and supports as specified above but complete with MSS Type 48 spring cushions;

.2 for plastic piping – generally as specified above but in accordance with pipe manufacturer's recommendations;

.3 for fire protection piping – generally as above but ULC listed and/or FM approved, and in accordance with Chapter requirements of NFPA Standard applicable to piping system;

.4 for bare horizontal copper piping – generally as above but factory vinyl coated to prevent direct copper/steel contact;

.5 for bare copper vertical piping – corrosion resistant ferrous clamps with flexible rubber gasket type material (not tape) to isolate pipe from clamp;

.6 insulation protection shields to and including 40 mm (1-½") dia. – MSS Type 40 galvanized steel shields with ribs to keep shield centred on hanger.

.7 Hanger rods are to be electro-galvanized carbon steel (unless otherwise specified), round, threaded, to ASTM A36, complete with captive machine nuts with washers at hangers, sized to suit loading in accordance with Table 3 in MSS SP-58, but minimum 9.5 mm (3/8") diameter.

.8 Acceptable manufacturers are:

.1 E. Myatt & Co. Inc.;

.2 Anvil International Inc.;

.3 Empire Industries Inc.;

.4 Hunt Manufacturing Ltd.;

.5 Unistrut Canada Ltd.;

.6 Nibco Inc. "Tolco";

.7 Taylor Pipe Supports.

## 2.04 PRESSURE GAUGES AND THERMOMETERS

.1 Pressure gauges as follows:

.1 adjustable, glycerine filled, 100 mm or 115 mm (4" or 4-½") diameter and each accurate to within 1% of scale range;

.2 type 304 stainless steel case with relief valve and polished stainless steel bayonet;

.3 stainless steel rotary movement with stainless steel bushings and socket;

.4 clear acrylic window;

.5 dual scale white dial with a scale range such that working pressure of system is at approximate mid-point of scale;

.6 black pointer.

.2 Pressure gauge accessories and additional requirements as follows:

.1 bronze ball type shut-off valve is to be provided in piping to each pressure gauge;

.2 each pressure gauge for piping and equipment with normal everyday flow is to be equipped with a brass pressure snubber;

.3 each pressure gauge for steam piping or steam equipment is to be equipped with a steel coil syphon;

.4 pressure gauges in fire protection piping must be ULC listed and labelled;

.3 Thermometers as follows:

.1 round, 125 mm (5") diameter, adjustable (90°) angle bimetal dial type thermometers, each accurate to within 1% of full scale;

.2 hermetically sealed stainless steel case with stainless steel ring;

.3 dampened bimetal coil;

.4 calibration adjustment screw;

.5 white aluminum dual scale dial with black and blue markings and a range such that working temperature of system is approximate mid-point of the scale;

.6 black aluminum pointer;

.7 double strength glass window;

.8 12 mm (½") NPT connection with 6.4 mm (¼") diameter stainless steel stem;

.9 suitable thermowell.

.4 Acceptable manufacturers are:

.1 H.O. Trerice Co.;

.2 Weiss Instruments;

.3 Ashcroft.

## 2.05 SPRINKLER PROTECTION

.1 Provide drip shields for protection of surface mounted equipment enclosures from water spray and dripping of liquids. Features of shields include:

.1 factory constructed by respective equipment manufacturers;

.2 constructed from non-combustible materials (sheet steel);

.3 enamel painted to match equipment;

.4 surfaces and edges filled/sanded smooth prior to painting;

.5 supported from equipment with structural steel rods/metal framing or other method approved by Consultant;

.6 structural support finish painted to match shield.

.2 Include with equipment shop drawings, detailed dimensions of drip shields and methods of supporting.

.3 Equipment with top cable/conduit entries to include additional sealing of entries with gasketing and/or waterproof sealant to prevent water from entering enclosure.

.4 Design ventilation louvers such that live components are not exposed to water spray and dripping liquids.

.5 Above requirements are additional minimum "sprinkler protection" (or sprinkler proof) standards for equipment specified as NEMA 1, 2 or 12.

.6 Obtain CSA approval where required by local governing authorities.

## 2.06 MECHANICAL WORK IDENTIFICATION MATERIALS

.1 Equipment nameplates are to be minimum 1.6 mm (1/16") thick 2-ply laminated coloured plastic plates, minimum 12 mm x 50 mm (½" x 2") for smaller items such as damper motors and control valves, minimum 25 mm x 65 mm (1" x 2-½") for equipment, and minimum 50 mm x 100 mm (2" x 4") for control panels and similar items. Additional requirements are as follows:

.1 unless otherwise specified or required, each nameplate is to be white, complete with bevelled edges and black engraved wording to completely identify equipment and its use with no abbreviations;

.2 wording is generally to be as per drawings, i.e. Fan EF-1, and is to include equipment service and building area/zone served, but must be reviewed with Consultant prior to engraving;

.3 supply stainless steel screws for securing nameplates in place;

.4 nameplates for equipment suspended above floor level or generally not within easy viewing from floor level are to be increased in size so as to be easily readable from floor level.

.2 Valve tags are to be coloured, 40 mm (1-½") square, 2-ply laminated plastic with bevelled edges, red-white, green-white, yellow-black, etc., to match piping identification colour, each complete with a 3.2 mm (1/8") diameter by 100 mm (4") long brass plated steel bead chain, and four lines of engraved maximum size identification wording, i.e.:

VALVE V12
200 mm (8")
CHILL. WATER
NORMALLY OPEN

.3 Standard pipe identification to be Smillie McAdams Summerlin Ltd., Brady or Primark Manufacturing Inc. vinyl plastic with indoor/outdoor type vinyl ink lettering and directional arrows, as follows:

.1 for pipe less than or equal to 150 mm (6") diameter, coiled type snap-on markers of a length to wrap completely around pipe or pipe insulation;

.4 Identification wording and colours for pipe identification materials are to be as follows:

| PIPE SERVICE | IDENTIFICATION COLOUR | LEGEND |
|---|---|---|
| domestic cold water | green | DOM. COLD WATER |
| domestic hot water supply | green | DOM. HW SUPPLY |
| domestic hot water recirculation | green | DOM. HW RECIRC. |
| tempered domestic water | green | TEMP. DOM. WATER |

| PIPE SERVICE | IDENTIFICATION COLOUR | LEGEND |
|---|---|---|
| sanitary drainage | green | SAN. |
| plumbing vent | green | SAN. VENT |
| fire protection standpipe | red | F.P. STANDPIPE |
| fire protection sprinklers | red | F.P. SPRINKLER |
| low pressure steam | yellow | ….kPa STEAM |
| medium pressure steam | yellow | ….kPa STEAM |
| high pressure steam | yellow | ….kPa STEAM |
| low pressure condensate | yellow | L.P. CONDENSATE |
| pumped condensate | yellow | PUMPED CONDENSATE |
| compressed air (< 700 kPa) | green | ….kPa COMP. AIR |
| compressed air (>700 kPa) | yellow | ….kPa COMP. AIR |

.5 Colours for pipe identification legends and directional arrows are to be as follows:

| IDENTIFICATION COLOUR | LEGEND & ARROW COLOUR |
|---|---|
| yellow | black |
| green | white |
| red | white |

.6 Duct identification is to be custom made Mylar stencils with 50 mm (2") high lettering to accurately describe duct service, i.e. "AHU-1 SUPPLY", complete with a directional arrow, and coloured ink with ink pads and roller applicators. Ink colour is generally to be black but must contrast with lettering background.

## 2.07 FLEXIBLE CONNECTORS

.1 Double wall stainless steel flexible connectors for piping connections to vibration isolated equipment, each selected by manufacturer to suit the application. Shop drawings or product data sheets must indicate construction and performance requirements that suit the application. Acceptable manufacturers are:

.1 Hyspan Precision Products Inc.;

.2 Senior Flexonics Ltd.;

.3 The Metraflex Co.

# 3 EXECUTION

## 3.01 GENERAL PIPING AND DUCTWORK INSTALLATION REQUIREMENTS

.1 Unless otherwise specified, locate and arrange horizontal pipes and ducts above or at ceiling on floors, arranged so that under consideration of all other work in area, maximum ceiling height and/or usable space is maintained. If required to maintain ceiling heights, reroute and/or resize ductwork, as reviewed with Consultant and with Owner approval.

.2 Unless otherwise specified, install work concealed in finished spaces, and concealed to degree possible in partially finished and unfinished spaces. Refer to and examine Architectural drawings and room finish schedules to determine finished, partially finished, and unfinished areas. Walls which are painted are considered finished.

.3 Install pipes and ducts parallel to building lines and to each other.

.4 Neatly group and arrange exposed work.

.5 Locate work to permit easy access for service or maintenance as required and/or applicable. Locate valves, dampers and any other equipment which will or may need maintenance or repairs and which are to be installed in accessible construction so as to be easily accessible from access doors. Where valves, dampers and similar piping or ductwork accessories occur in vertical services in shafts, pipe spaces or partitions, locate accessories at floor level.

.6 Make connections between pipes of different materials using adapters suitable for application. Provide cast brass dielectric type adapters/unions at connections between ferrous and copper pipe.

.7 Comply with equipment and material manufacturer's installation instructions unless otherwise specified herein or on drawings, and unless such instructions contradict governing codes and regulations.

.8 Carefully clean ducts, pipe and fittings prior to installation. Temporarily cap or plug ends of pipe, ducts and equipment which are open and exposed during construction.

.9 Install piping and ductwork which are to be insulated, to have sufficient clearance to permit insulation and finish to be applied continuously and unbroken around pipe or duct.

.10 Inspect surfaces and structure prepared by other trades before performing work. Verify surfaces or structure to receive work has no defects or discrepancies which could result in poor application or cause latent defects in installation and workmanship. Report defects in writing to Consultant. Installation of work will constitute acceptance of such surfaces as being satisfactory.

.11 Any ferrous piping that exhibits in excess of 5% surface rust, either inside or outside or both, is to be wire brush cleaned to bare metal and coated with suitable primer. Steel pipe, fittings and accessories are to be free of corrosion and dirt when work is complete or prior to being concealed from view. Where dirt is evident, clean piping prior to being concealed.

.12 For factory applied finishes, repaint or refinish surfaces damaged during shipment and installation. Quality of repair work is to match original finish. This requirement also applies to galvanized finishes.

.13 Where mechanical work is located in high humidity areas where ferrous metal products will be subject to corrosion and protection for such products is not specified, provide finishes on products to protect against corrosion or provide products which will not corrode in the environment, i.e. aluminium ductwork, copper or stainless steel pipe, etc.

.14 Provide screwed unions or flanges in piping connections to equipment and in regular intervals in long (in excess of 12 m [40']) piping runs to permit removal of sections of piping.

.15 Unless otherwise specified and except where space limitations do not permit, piping elbows are to be long radius. Eccentric reducers are to be installed with straight side at top of piping.

## 3.02 PIPE JOINT REQUIREMENTS

.1 Do not make pipe joints in walls or slabs.

.2 Ream piping ends prior to making joints.

.3 Properly cut threads in screwed steel piping and coat male threads only with Teflon tape or paste, or an equivalent thread lubricant. After pipe has been screwed into fitting, valve, union, or piping accessory, not more than 2 pipe threads are to remain exposed.

.4 Site bevel steel pipe to be welded or supply mill bevelled pipe. Remove scale and oxide from bevels and leave smooth and clean. Use factory made welding tees or welding outlet fittings for piping branches off mains. Do not use shop or site fabricated fittings unless written approval has been obtained.

.5 Welded joints are to be made by CWB certified licensed journeyman welders qualified in accordance with CSA B51, Boiler Pressure Vessel and Pressure Piping Code, and who are in possession of a proper certificate of qualification for each procedure to be performed. Each weld is to be identified with the welder’s identification symbol, and welds are not to be concealed until welder making joints has inspected them for quality assurance. Electrodes are to be in accordance with CSA W48 Series, Electrodes, and requirements of CAN/CSA W117.2, Safety in Welding, Cutting and Allied Processes are to be followed.

.6 Unless otherwise specified make soldered joints in copper piping using flux suitable for and compatible with type of solder being used. Clean outside of pipe end and inside of fitting, valve, or similar accessory prior to soldering.

.7 Install mechanical joint fittings and couplings in accordance with manufacturer's instructions.

.8 Grooves are to be rolled. Make arrangements with coupling and fitting manufacturer for shop and/or site instructions and demonstrations as required, and adhere to manufacturer's instructions with respect to pipe grooving, support, type of gasket required, anchoring and guiding grooved piping system.

.9 If pressure crimped couplings and fittings are used, ensure gaskets are fully compatible with piping fluid, and valves and piping accessories are suitable. Use only fitting manufacturer supplied crimping equipment. Comply with manufacturer’s latest published specification, instructions, and recommendations with respect to pipe, coupling, and fitting preparation and installation, and support, anchoring and guiding of piping system.

.10 Solvent weld PVC piping in 2 parts, primer stage and cementing stage, in accordance with manufacturer’s recommendations, ASTM D2855, and CSA requirements.

.11 Install PVC piping with gasketed joints in accordance with manufacturer’s current published specifications, instructions and recommendations, and CSA requirements.

## 3.03 INSTALLATION OF PIPE ESCUTCHEON PLATES

.1 Provide escutcheon plates suitably secured over exposed piping passing through finished building surfaces. Finished building surface is any surface with a factory finish or that receives a site applied finish.

.2 Install plates so they are tight against building surface concerned, completely covering pipe sleeves and/or openings, except where waterproof sleeves extend above floors, in which case fit plate tightly around sleeve.

## 3.04 INSTALLATION OF FASTENING AND SECURING HARDWARE

.1 Provide fastening and securing hardware required for mechanical work to maintain installations attached to structure or to finished floors, walls and ceilings in a secure and rigid manner capable of withstanding dead loads, live loads, superimposed dead loads, and any vibration of installed products.

.2 Use fasteners compatible with structural requirements, finishes and types of products to be connected. Do not use materials subject to electrolytic action or corrosion where conditions are liable to cause such action.

.3 Where floor, wall or ceiling construction is not suitable to support loads, provide additional framing or special fasteners to ensure proper securement to structure that is to support the products. Provide reinforcing or connecting supports where required to distribute loading to structural components.

.4 Obtain written consent from Owner and review with Consultant, before using explosive actuated fastening devices. If consent is obtained, comply with requirements of CAN/CSA Z166.1 and CAN/CSA Z166.2.

## 3.05 INSTALLATION OF PIPE HANGERS AND SUPPORTS

.1 Provide required pipe hangers and supports.

.2 Provide any additional structural steel channels, angles, inserts, beam champs and similar accessories required for hanging or supporting pipe. Unless otherwise shown or specified, hang or support pipes from structure only.

.3 For insulated pipe, size hanger or support to suit diameter of insulated pipe and install hanger or support on outside of insulation and insulation finish.

.4 Unless otherwise shown or specified, hang and/or support horizontal pipe above ground by means of hangers and/or supports specified in Part 2 of this Section. Unless otherwise shown or specified, hangers for suspended pipe less than or equal to 25 mm (1") dia. are to be clevis type or adjustable ring type, and hangers for suspended pipe greater than or equal to 40 mm (1-½") dia. are to be adjustable clevis type.

.5 Space hangers and supports in accordance with following:

.1 cast iron pipe – hang or support at every joint with maximum 2.4 m (8') spacing;

.2 plastic pipe – conform to pipe manufacturer’s recommended support spacing;

.3 copper and steel pipe – hang or support at spacing in accordance with following schedule:

| PIPE DIA. | MAX. SPACING STEEL (meters) | MAX. SPACING COPPER (meters) |
|---|---|---|
| to 25 mm (1") | 2.4 m (8') | 1.8 m (6') |
| 40 mm (1-½") | 2.7 m (9') | 2.4 m (8') |
| 50 mm (2") | 3.0 m (10') | 2.7 m (9') |
| 65 mm (2-½") | 3.6 m (12') | 3.0 m (10') |
| 75 mm (3") | 3.6 m (12') | 3.0 m (10') |
| 90 mm (3-½") | 3.6 m (12’) | 3.6 m (12') |
| 100 mm (4") | 4.2 m (14') | 3.6 m (12') |
| 250 mm (10") | 6.0 m (20') | |
| 300 mm (12") | 6.7 m (22') | |

.4 flexible grooved pipe/coupling joint piping – as above but with not less than one hanger or support between joints.

.6 Where pipes change direction, either horizontally or vertically, provide a hanger or support on horizontal pipe not more than 300 mm (12") from elbow, and where pipes drop from tee branches, support tees in both directions not more than 50 mm (2") on each side of tee.

.7 When pipes with same slope are grouped and a common hanger or support is used, space hanger or support to suit spacing requirement of smallest pipe in group and secure pipes in place on common hanger or support.

.8 Provide roller hangers or supports for heat transfer piping greater than or equal to 150 mm (6") diameter and conveying a material 75°C (170°F) or greater to facilitate pipe movement due to expansion and contraction, and at each hanger or support tack weld a steel protection saddle to pipe to protect piping insulation.

.9 Unless otherwise shown or specified, support vertical piping by means of supports specified in Part 2 of this Section, spaced in accordance with following:

.1 support vertical pipes at maximum 3 m (10') intervals or at every floor, whichever is lesser;

.2 for sections of vertical piping with a length less than 3 m (10'), support pipe at least once;

.3 for vertical cast iron plain end pipe (mechanical joint type), secure riser or pipe clamp around pipe under a flange integral with pipe for vertical support purposes, or provide a length of hub and spigot pipe to facilitate proper support;

.4 for vertical steel pipe risers in excess of 3 m (10'), weld shear lugs to pipe to carry load;

.5 for vibration isolated piping risers, provide rubber-steel-rubber vibration isolation pads between riser clamps and floor.

.10 Each hanger, support or securement for horizontal bare copper tubing is to be plastic coated to prevent direct contact between pipe and ferrous hanger. Each wall or floor clamp for vertical bare copper piping is to be isolated from pipe by means of strips of flexible rubber inserts. Use of painted ferrous hangers and supports, including those painted with copper coloured paint, is not acceptable. Site application of tape or other types of isolation is not acceptable.

.11 For insulated horizontal piping less than or equal to 40 mm (1-½") diameter, provide galvanized steel insulation protection shields between insulation and hanger or support. Install shields immediately after pipe is insulated.

## 3.06 INSTALLATION OF VALVES

.1 Generally, valve locations are indicated or specified on drawings or specified in Sections of the Specification where valves are specified, however, regardless of locations shown or specified, following requirements apply:

.1 provide shut-off valves to isolate systems, at base of vertical risers, in branch take-offs at mains and risers on floors, to isolate equipment, to permit work phasing as required, and wherever else required for proper system operation and maintenance;

.2 install shut-off valves with handles upright or horizontal, not inverted, and located for easy access;

.3 unless otherwise specified, provide a check valve in discharge piping of each pump;

.4 valve sizes are to be same as connecting pipe size;

.5 valves are to be permanently identified with size, manufacturer's name, valve model or figure number and pressure rating, and wherever possible, valves are to be product of same manufacturer;

.6 for valves in insulated piping, design of valve stem, handle and operating mechanism is to be such that insulation does not have to be cut or altered in any manner to permit valve operation.

## 3.07 INSTALLATION OF PRESSURE GAUGES AND THERMOMETERS

.1 Provide pressure gauges in following locations:

.1 wherever shown and/or specified.

.2 Provide thermometers in following locations:

.1 wherever shown and/or specified.

.3 Conform to following installation requirements:

.1 for installation of thermometers in piping wells, provide a coat of metallic base heat transfer paste or grease in piping well;

.2 for pressure gauges in piping at equipment locations, install pressure gauge between equipment and first pipe fitting;

.3 locate, mount and adjust instruments so they are easily readable;

.4 where pressure gauges and/or thermometers are located at high level or in an area where they cannot be easily seen, provide remote reading instruments.

## 3.08 MECHANICAL WORK IDENTIFICATION

.1 Identify new exposed piping and ductwork as per Part 2 of this Section in locations as follows:

.1 at every end of every piping or duct run;

.2 adjacent to each valve, strainer, damper and similar accessory;

.3 at each piece of connecting equipment;

.4 on both sides of every pipe and duct passing through a floor, wall or partition, unless otherwise specified;

.5 at 6 m (20') intervals on pipe and duct runs exceeding 6 m (20') in length;

.6 at least once in each room, and at least once on pipe and duct runs less than 6 m (20') in length.

.2 Unless otherwise specified identify new concealed piping and ductwork as per Part 2 of this Section in locations as follows:

.1 at points where pipes or ducts enter and leave rooms, shafts, pipe chases, furred spaces, and similar areas;

.2 at maximum 6 m (20') intervals on piping and ductwork above suspended accessible ceilings, and at least once in each room;

.3 at each access door location;

.4 at each piece of connected equipment, automatic valve, etc.

.3 Provide an identification nameplate for equipment provided as part of this project, including items such as control valves, motorized dampers, instruments, and similar products. Secure nameplates in place, approximately at eye level if possible, with stainless steel screws unless such a practice is prohibitive, in which case use epoxy cement applied to cleaned surfaces. Locate nameplates in the most conspicuous and readable location.

.4 Paint new natural and/or propane gas piping with primer and 2 coats of yellow paint in accordance with local governing code requirements and requirements of Division 09. Identify piping at intervals as specified above.

.5 Tag valves and prepare a valve tag chart in accordance with following requirements:

.1 attach a valve tag to each new valve, except for valves located immediately at equipment they control;

.2 prepare a computer printed valve tag chart to list tagged valves, with, for each valve, the tag number, location, valve size, piping service, and valve attitude (normally open or normally closed);

.3 if an existing valve tag chart is available at site, valve tag numbering is to be an extension of existing numbering and new valve tag chart is to incorporate existing chart;

.4 frame and glaze one copy of chart and, unless otherwise directed, affix to a wall in each main Mechanical and/or Equipment Room;

.5 include a copy of valve tag chart in each copy of operating and maintenance instruction manuals;

.6 hand an identified CD of valve tag chart to Owner at same time O&M Manuals are submitted.

.6 Where shut-off valves, control dampers, sensors, and similar items which will or may need maintenance and/or repair are located above accessible suspended ceilings, provide round coloured ceiling tacks in ceiling panel material, or stickers equal to Brady "Quick Dot" on ceiling grid material to indicate locations of items. Unless otherwise specified, ceiling tack or sticker colours are to be as follows:

| | | |
|---|---|---|
| .1 | HVAC piping valves and equipment: | yellow |
| .2 | fire protection valves and equipment: | red |
| .3 | plumbing valves and equipment: | green |
| .4 | HVAC ductwork dampers and equipment: | blue |
| .5 | control system hardware and equipment: | orange |

## 3.09 PIPE LEAKAGE TESTING

.1 Before piping has been insulated or concealed, and before equipment, fixtures and fittings have been connected, test piping for leakage.

.2 Tests are to be witnessed by Consultant and/or Owner's representative, and, where required, representatives of governing authorities. Give ample notice (minimum 7 working days) of tests in writing and verify attendance. Have completed test report sheets dated and signed by those present to confirm proper test results.

.3 When circumstances prevent scheduled tests from taking place, give immediate and adequate notice of cancellation to all who were scheduled to attend.

.4 Gravity Drainage and Vent Piping

.1 Test piping in accordance with local governing building code.

.2 After fixtures and fittings are set and pipes are connected to building drain or drains, turn on water into pipe, fixtures, fittings and traps in order to detect any imperfect material or workmanship. Perform smoke test if required by local governing authorities.

.5 Domestic Water Piping

.1 Test piping with cold water at a pressure of 1-½ times normal working pressure and maintain pressure for minimum of 2 hours.

.6 Sprinkler System Piping

.1 Test system piping in accordance with requirements of NFPA No. 13, "Installation of Sprinkler Systems", and in accordance with any additional requirements of governing authorities.

.7 Steam and Condensate Piping

.1 Test piping with cold water for minimum of 2 hours at following pressures:

.1 0 kPa to 105 kPa (0 psi to 15 psi) low pressure piping – 690 kPa (100 psi);

.2 110 kPa to 690 kPa (16 psi to 100 psi) medium pressure piping – 1035 kPa (150 psi);

.8 Compressed Air Piping

.1 Test piping with dry compressed air or nitrogen at 690 kPa (100 psi) for minimum of 2 hours.

.2 Test piping joints with water-soap solution while piping is under pressure to detect leaks.

.9 Pure Water Piping

.1 When piping has been properly flushed and cleaned, test at 690 kPa (100 psi) for 2 hours with only distilled water or filtered dry compressed air. If distilled water is used, drain system when testing is complete.

.10 Following requirements apply to all testing:

.1 ensure piping has been properly flushed, cleaned and is clear of foreign matter prior to pressure testing;

.2 temporarily remove or valve off piping system specialties or equipment which may be damaged by test pressures prior to pressure testing systems, and flush piping to remove foreign matter;

.3 when testing is carried out below highest level of particular system, increase test pressure by the hygrostatic head of 7 kPa (1 psi) for every 600 mm (24") below high point;

.4 include for temporary piping connections required to properly complete tests;

.5 piping under test pressure is to have zero pressure drop for length of test period;

.6 make tight leaks found during tests while piping is under pressure, and if this is impossible, remove and refit piping and reapply test until satisfactory results are obtained;

.7 where leaks occur in threaded joints in steel piping, no caulking of these joints will be allowed under any conditions;

.8 perform tests in reasonably sized sections so as to minimize number of tests required;

.9 in addition to leakage tests specified above, demonstrate proper flow throughout systems including mains, connections and equipment, as well as proper venting and drainage, and include for any necessary system adjustments to achieve proper conditions.

## 3.10 INTERRUPTION TO AND SHUT-DOWN OF MECHANICAL SERVICES AND SYSTEMS

.1 Coordinate shut-down and interruption to existing mechanical systems with Owner. Generally, shut-downs may be performed only between the hours of 12:00 midnight Friday until 6:00 a.m. Monday morning. Include for costs of premium time to perform work during nights, weekends or other times outside of normal working hours, which may be necessary to comply with stipulations specified herein this Article. Services for operation of existing non-renovated areas of building are to be maintained.

.2 Upon award of a Contract, submit a list of anticipated shut-down times and their maximum duration.

.3 Prior to each shut-down or interruption, inform Owner and Consultant in writing minimum 7 working days in advance of proposed shut-down or interruption and obtain written consent to proceed. Do not shut-down or interrupt any system or service without such written consent. Shutdowns of some essential services may require additional advance notification time.

.4 Perform work associated with shut-downs and interruptions as continuous operations to minimize shut-down time and to reinstate systems as soon as possible, and, prior to any shut-down, ensure materials and labour required to complete the work for which shut-down is required are available at site.

.5 Confirm any methods of procedures with Owner and review with Consultant prior to start of work.

## 3.11 CLEANING MECHANICAL WORK

.1 Refer to cleaning requirements specified in Division 01.

.2 Clean mechanical work prior to application for Substantial Performance of the Work.

.3 Include for vacuum cleaning interior of air handling units and ductwork systems.

## 3.12 CONNECTIONS TO OTHER EQUIPMENT

.1 Carefully examine Contract Documents during bidding period and include for mechanical work piping and/or ductwork connections to equipment requiring such connections.

## 3.13 SEISMIC RESTRAINT ANCHOR POINTS FOR EQUIPMENT

.1 Mechanical equipment requiring seismic restraint (refer to Section entitled Seismic Control and Restraint) is to be complete with manufacturer designed and rated seismic restraint anchor points and attachments, certified by equipment manufacturers, so equipment may be bolted down or restrained in the field.

.2 Design equipment to be restrained such that strength and anchorage of internal components of equipment exceeds force level used to restrain and anchor equipment itself to supporting structure.

## 3.14 INSTALLATION OF FLEXIBLE CONNECTORS

.1 Provide flexible connectors in piping connections to seismically restrained equipment, and wherever else shown.

.2 Provide flexible connectors in piping connections to vibration isolated equipment.

## 3.15 EQUIPMENT AND SYSTEM MANUFACTURER'S CERTIFICATION

.1 When equipment/system installation is complete, but prior to start-up procedures, arrange and pay for equipment/system manufacturer's authorized representative to visit site to examine installation, and after any required corrective measures have been made, to certify in writing to Owner and Consultant that equipment/system installation is complete and in accordance with equipment/system manufacturer's instructions.

## 3.16 EQUIPMENT AND SYSTEM START-UP

.1 When installation of equipment/systems is complete but prior to commissioning, perform start-up for equipment/systems as specified in mechanical work Sections and in accordance with following requirements:

.1 submit a copy of each equipment/system manufacturer's start-up report sheet to Consultant for review, and incorporate any comments made by Consultant, Owner or Commissioning Agent, as applicable;

.2 under direct on-site supervision and involvement of equipment/system manufacturer's representative, start-up equipment/systems, make any required adjustments, document procedures, leave equipment/systems in proper operating condition, and submit to Consultant complete set of start-up documentation sheets signed by manufacturer/supplier and Contractor;

.3 submit documents signed by equipment/system manufacturer testing technician, in both hard copy and pdf electronic copy formats.

## 3.17 INTEGRATED SYSTEMS TESTING

.1 Perform testing of integrated systems and equipment in accordance with CAN/ULC-S1001.

.2 Engage respective systems or equipment vendors or trades to be onsite during inspection and testing work to perform adjustments or remedial work to correct issues identified by inspection and testing work.

**END OF SECTION**

# 1 GENERAL

## 1.01 APPLICATION

.1 This Section specifies insulation requirements common to Mechanical Divisions work Sections and it is a supplement to each Section and is to be read accordingly.

## 1.02 DEFINITIONS

.1 "concealed" – means mechanical services and equipment above suspended ceilings, in non-accessible chases, in accessible pipe spaces, and furred-in spaces.

.2 "exposed" – means exposed to normal view during normal conditions and operations.

.3 "mineral fibre" – includes glass fibre.

.4 "mineral wool" – includes rock wool and slag wool.

.5 "domestic water" or "potable water" – means piping extended from building Municipal supply main.

## 1.03 SUBMITTALS

.1 Submit a product data sheet for each insulation system product. Include identification that product has also been tested to CAN/ULC S102.

## 1.04 QUALITY ASSURANCE

.1 Mechanical insulation is to be applied by a licensed journeyman insulation mechanic, or by an apprentice under direct, daily, on-site supervision of a journeyman mechanic.

.2 Do not apply insulation unless leakage tests have been satisfactorily completed.

.3 Ensure surfaces to be insulated are clean and dry.

.4 Ensure ambient temperature is minimum 13°C (55°F) for at least 1 day prior to application of insulation, and for duration of insulation work, and relative humidity is and will be at a level such that mildew will not form on insulation materials.

.5 Insulation materials must be stored on site in a proper, dry storage area. Any wet insulation material is to be removed from site.

# 2 PRODUCTS

## 2.01 FIRE HAZARD RATINGS

.1 Unless otherwise specified, insulation system materials inside building must have a fire hazard rating of not more than 25 for flame spread and 50 for smoke developed when tested in accordance with ULC S102, Surface Burning Characteristics of Building Materials and Assemblies.

## 2.02 THERMAL PERFORMANCE

.1 Unless otherwise specified, thermal performance of insulation is to meet or exceed values given in Tables entitled Minimum Piping Insulation Thickness Heating and Hot Water Systems and Minimum Piping Insulation Thickness Cooling Systems, as stated in ANSI/ASHRAE/IES Standard 90.1 version referenced in Ontario Building Code.

## 2.03 PIPE INSULATION MATERIALS

.1 Horizontal Pipe Insulation at Hangers and Supports

.1 Equal to Belform Insulation Ltd. "Koolphen K-Block" insulated pipe support inserts consisting of minimum 150 mm (6") long, pre-moulded, rigid, sectional phenolic foam insulation (of same thickness as adjoining insulation) with a reinforced foil and kraft paper vapour barrier jacket and a captive galvanized steel saddle.

.2 Pre-Moulded Mineral Wool

.1 Rigid, sectional, sleeve type, fire-rated, non-combustible, longitudinally split mineral wool or basalt pipe insulation with a reinforced vapour barrier jacket, and compatible with ULC S115 and ULC S101 firestopping.

.2 Acceptable products are:

.1 Roxul "Techton 1200";

.2 IIG (Johns Manville Inc.) MinWool-1200.

.3 Pre-Moulded Mineral Fibre

.1 Rigid, sectional, sleeve type insulation to ASTM C547, with a factory applied vapour barrier jacket.

.2 Acceptable products are:

.1 Johns Manville Inc. "Micro-Lok AP-T Plus";

.2 Knauf Fiber Glass "Pipe Insulation" with "ASJ-SSL" jacket;

.3 Manson Insulation Inc. "ALLEY K APT";

.4 Owens Corning “Fiberglas” Pipe Insulation.

.4 Blanket Mineral Fibre

.1 Blanket type roll insulation to ASTM C553, 24 kg/m$^3$ (1-½ lb/ft$^3$) density, with a factory applied vapour barrier facing.

.2 Acceptable products are:

.1 Johns Manville Inc. Microlite FSK Duct Wrap Type 150;

.2 Knauf Fiber Glass Blanket Insulation FSK Duct Wrap Type III;

.3 Manson Insulation Inc. ALLEY WRAP FSK Duct Wrap Type III;

.4 Certainteed Corporation Softtouch FSK Duct Wrap Type 150.

## 2.04 DUCTWORK SYSTEM INSULATION MATERIALS

.1 Blanket Mineral Fibre

.1 Blanket type roll form insulation to ASTM C553, 24 kg/m$^3$ (1-½ lb/ft$^3$) density, 40 mm (1-½") thick, with a factory applied vapour barrier facing.

.2 Acceptable products are:

.1 Johns Manville Inc. Microlite FSK Duct Wrap Type 150;

.2 Knauf Fiber Glass Blanket Insulation FSK Duct Wrap Type III;

.3 Manson Insulation Inc. ALLEY WRAP FSK Duct Wrap Type III;

.4 Certainteed Corporation Softtouch FSK Duct Wrap Type 150.

## 2.05 INSULATING COATINGS

.1 Equal to Robson Thermal Manufacturing Ltd. insulating coatings as follows:

.1 anti-condensation coating, "No Sweat-FX";

.2 thermal insulating coating, "ThermaLite".

## 2.06 INSULATION FASTENINGS

.1 Duct Insulation Fasteners

.1 Weld-on 2 mm (3/32") diameter zinc coated steel spindles of suitable length, complete with minimum 40 mm (1-½") square plastic or zinc plated steel self-locking washers.

.2 Tape Sealant

.1 Equal to 3M 1520-CW self-adhesive insulation tapes, types PAF, FSK, ASJ, or SWV as required to match surface being sealed.

.3 Mineral Fibre Insulation Adhesive

.1 Clear, pressure sensitive, brush consistency adhesive, suitable for a temperature range of -20°C to 82°C (-4°F to 180°F), compatible with type of material to be secured, and WHMIS classified as non-hazardous.

.4 Lagging Adhesive

.1 White, brush consistency, ULC listed and labelled, maximum 25/50 fire/smoke rated in accordance with ULC S102, lagging adhesive for canvas jacket fabric, suitable for colour tinting, complete with fungicide and washable when dry.

.5 Screws

.1 No. 10 stainless steel sheet metal screws.

## 2.07 INSULATION JACKETS AND FINISHES

.1 Canvas Jacket Material

.1 ULC listed and labelled, 25/50 fire/smoke rated, roll form, minimum 170 g (6 oz.).

.2 Roll Form Sheet and Fitting Covers

.1 Minimum 15 mm (½") thick white PVC, maximum 25/50 fire/smoke rated tested in accordance with ULC S102, complete with installation and sealing accessories. Acceptable products are:

.1 Johns Manville Inc. "Zeston" 300;

.2 Proto Corp. "LoSMOKE".

.3 Thermal Insulating and Finishing Cement

.1 Heat resistant, trowel consistency thermal insulating and finishing cement to CAN/CGSB 51.12, and suitable for the application.

## 3 EXECUTION

### 3.01 GENERAL INSULATION APPLICATION REQUIREMENTS

.1 Unless otherwise specified, do not insulate following:

.1 factory insulated equipment and piping;

.2 branch potable water piping located under counters to serve counter mounted plumbing fixtures and fittings, except barrier-free lavatories;

.3 exposed chrome plated potable water angle supplies from concealed piping to plumbing fixtures and fittings, except barrier-free lavatories;

.4 manufactured expansion joints and flexible connections;

.5 acoustically lined ductwork and/or equipment;

.6 factory insulated flexible branch ductwork;

.7 piping unions, except for unions in "cold" category piping.

.2 Install work generally in accordance with TIAC National Insulation Standards Manual except conform to manufacturer's instructions and recommendations, and requirements specified in this Section.

.3 Install insulation directly over pipes and ducts, not over hangers and supports.

.4 Install piping insulation and jacket continuous through pipe openings and sleeves.

.5 Install duct insulation continuous through walls, partitions, and similar surfaces except at fire dampers.

.6 For insulation thicknesses greater than or equal to 75 mm (3"), provide double layer of insulation to achieve required insulation thickness and stagger joint locations.

.7 When insulating "cold" piping and equipment, extend insulation up valve bodies and other such projections as far as possible, and protect insulation jacketing from condensation at its junction with metal.

.8 When insulating vertical piping risers 75 mm (3") diameter and larger, use insulation support rings welded directly above lowest pipe fitting, and thereafter at 4.5 m (14.7') centres and at each valve and flange. Insulate in accordance with Thermal Insulation Association of Canada National Insulation Standards, Figure No. 9.

.9 Where existing insulation work is damaged as a result of mechanical work, repair damaged insulation work to Project work standards.

.10 Where mineral fibre rigid sleeve type insulation is terminated at valves, equipment, unions, etc., neatly cover exposed end of insulation with a purpose made PVC cover on "cold" piping, and with canvas jacket material on "hot" piping.

.11 Carefully and neatly gouge out insulation for proper fit where there is interference between weld bead, mechanical joints, etc., and insulation. Bevel away from studs and nuts to permit their removal without damage to insulation, and closely and neatly trim around extending parts of pipe saddles.

.12 Where thermometers, gauges, and similar instruments occur in insulated piping, and where access to heat transfer piping balancing valve ports and similar items are required, create a neat, properly sized hole in insulation and provide a suitable grommet in the opening.

## 3.02 INSULATION FOR HORIZONTAL PIPE AT HANGERS AND SUPPORTS

.1 At each hanger and support location for piping 50 mm (2") diameter and larger to be insulated, except where roller hangers and/or supports are required, and unless otherwise specified, supply a factory fabricated section of phenolic foam pipe insulation with integral vapour barrier jacket and captive galvanized steel shield. Supply insulation sections to piping installers for installation as pipe is erected.

## 3.03 PIPE INSULATION REQUIREMENTS – MINERAL FIBRE

.1 Insulate following pipe inside building and above ground with mineral fibre insulation of thickness indicated:

.1 domestic cold water piping, less than 100 mm (4") dia. – 25 mm (1") thick;

.2 domestic cold water piping, greater than or equal to 100 mm (4") dia. – 40 mm (1-½") thick;

.3 domestic hot water piping, less than 40 mm (1-½") dia. – 25 mm (1") thick;

.4 domestic hot water piping, greater than or equal to 40 mm (1½") dia. – 40 mm (1-½") thick;

.5 tempered domestic water piping, supply and return, less than 40 mm (1-½") dia. – 25 mm (1") thick;

.6 tempered domestic water piping, supply and return, greater than or equal to 40 mm (1-½") dia. – 50 mm (2") thick;

.7 low pressure condensate piping, less than 40 mm (1-½") dia. – 40 mm (1-½") thick;

.8 low pressure condensate piping, greater than or equal to 40 mm (1-½") dia. – 50 mm (2") thick;

.2 Secure overlap flap of sectional insulation jacket tightly in place. Cover section to section butt joints with tape sealant.

.3 Insulate fittings with sectional pipe insulation mitred to fit tightly, and cover butt joints with tape sealant, or, alternatively, wrap fittings with blanket mineral fibre insulation to a thickness and insulating value equal to sectional insulation, secure in place with adhesive and/or wire, and cover with PVC fitting covers.

.4 Unless otherwise specified, insulate unions, valves, strainers, and similar piping system accessories in "cold" piping with cut and tightly fitted segments of sectional pipe insulation with joints covered with tape sealant, or, alternatively, wrap piping union, valve, strainer, etc., with blanket mineral fibre and cover with PVC covers as for paragraph above.

.5 Terminate sectional insulation approximately 50 mm (2") from flange or coupling on each side of flange or coupling. Cover flange or coupling with a minimum 50 mm (2") thickness of blanket mineral fibre insulation wide enough to butt tightly to ends of adjacent sectional insulation. Secure blanket insulation in place and cover with a purpose made PVC coupling cover.

## 3.04 PIPE INSULATION REQUIREMENTS – MINERAL WOOL

.1 Insulate following pipe inside building and above ground with high temperature mineral wool insulation of thickness indicated:

.1 high pressure (above 415 kPa [60 psi]) steam piping, less than 40 mm (1-½") dia. – 100 mm (4") thick;

.2 high pressure (above 415 kPa [60 psi]) steam piping, greater than or equal to 40 mm (1-½") dia. – 115 mm (4-½") thick;

.3 high pressure condensate piping – 50 mm (2") thick.

.2 Generally, install insulation on piping as specified above for mineral fibre insulation.

.3 Generally, install insulation on fittings as specified above for mineral fibre insulation but cover with canvas, not PVC fitting covers.

## 3.05 DUCTWORK INSULATION REQUIREMENTS – MINERAL FIBRE

.1 Insulate following ductwork systems inside building and above ground with mineral fibre insulation of thickness indicated:

.1 supply air ductwork outward from fans, except for supply ductwork exposed in area it serves – minimum 25 mm (1") thick rigid board or minimum 40 mm (1-½") thick flexible blanket as required;

.2 Provide rigid board type insulation for casings, plenums, and exposed rectangular ductwork. Provide blanket type insulation for concealed round, oval or rectangular ductwork. Provide semi-rigid mineral fibre board type insulation for exposed round or oval ducts.

.3 Liberally apply adhesive to surfaces of exposed rectangular ducts and/or casings. Accurately and neatly press insulation into adhesive with tightly fitted butt joints. Provide pin and washer insulation fasteners at 300 mm (12") centres on bottom and side surfaces. Secure and seal joints with 75 mm (3") wide tape sealant. Additional installation requirements as follows:

.1 at trapeze hanger locations, install insulation between duct and hanger;

.2 provide drywall type metal corner beads on edges of ductwork, casings and plenums in equipment rooms, service corridors, and any other area where insulation is subject to accidental damage, and secure in place with tape sealant.

.4 Liberally apply adhesive to surfaces of concealed rectangular or oval ductwork, and wrap insulation around duct with a top butt joint and tight section to section butt joints. Provide pin and washer insulation fasteners at 300 mm (12") centres on bottom surfaces. Secure and seal joints with 75 mm (3") tape sealant. At each trapeze type duct hanger, provide a 100 mm (4") wide full length piece of rigid mineral fibre board insulation between duct and hanger.

.5 Accurately cut sections of insulation to fit tightly and completely around exposed and concealed round or oval ductwork. Liberally apply adhesive to surfaces of duct, and wrap insulation around duct with a top butt joint and tight section to section butt joints. Seal joints with tape sealant. At duct hanger locations install insulation between duct and hanger. At each hanger location for concealed ductwork where flexible blanket type insulation is used, provide a 100 mm (4") wide full circumference strip of semi-rigid board type duct insulation between duct and hanger.

.6 Insulation application requirements common to all types of rigid ductwork are as follows:

.1 at duct connection flanges, insulate flanges with neatly cut strips of rigid insulation material secured with adhesive to side surfaces of flange with a top strip to cover exposed edges of the side strips, then butt the flat surface duct insulation up tight to flange insulation, or, alternatively, increase insulation thickness to depth of flange and cover top of flanges with tape sealant;

.2 installation of fastener pins and washers is to be concurrent with duct insulation application;

.3 cut insulation fastener pins almost flush to washer and cover with neatly cut pieces of tape sealant;

.4 accurately and neatly cut and fit insulation at duct accessories such as damper operators (with standoff mounting) and pitot tube access covers;

.5 prior to concealment of insulation by either construction finishes or canvas jacket material, patch vapour barrier damage by means of tape sealant.

## 3.06 APPLICATION OF INSULATING COATINGS

.1 Apply, in accordance with manufacturer’s instruction, insulating coatings to following bare metal surfaces:

.1 paint bare metal surfaces clear of "cold" piping and/or equipment insulation for a distance of from 300 mm (12") to 600 mm (24") clear of pipe or equipment insulation, with "No Sweat-FX" anti-condensation coating;

.2 paint bare metal surfaces associated with mechanical systems with an operating temperature 60°C (140°F) with "ThermaLite" insulating coating.

.2 Apply coatings with a brush. Remove any splatter or excess coating from adjacent surfaces.

## 3.07 INSULATION FINISH REQUIREMENTS

.1 Jacket exposed pipe insulation work inside building with white sheet PVC and fitting covers. Install sheet PVC and fitting covers tightly in place with overlapped circumferential and longitudinal joints arranged to shed water. Seal joints to produce a neat, water-tight installation. Provide slip-type expansion joints where required by manufacturer's instructions.

**END OF SECTION**

# 1 GENERAL

## 1.01 APPLICATION

.1 This Section specifies requirements, criteria, methods and execution for mechanical demolition work that are common to one or more mechanical work Sections, and it is intended as a supplement to each Section and is to be read accordingly.

# 2 PRODUCTS

Not Used

# 3 EXECUTION

## 3.01 DISCONNECTION AND REMOVAL OF EXISTING MECHANICAL WORK

.1 Where indicated on drawings, disconnect and remove existing mechanical work, including hangers, supports, insulation, etc. Disconnect at point of supply, remove obsolete connecting services and make system safe. Cut back obsolete piping behind finishes and cap water-tight unless otherwise specified.

.2 Scope and extent of demolition or revision work is only generally indicated on drawings. Estimate scope, extent and cost of work at site during bidding period site visit(s). Claims for extra costs for demolition work not shown or specified but clearly visible or ascertainable at site during bidding period site visits will not be allowed.

.3 If any re-design is required due to discrepancies between mechanical drawings and site conditions, notify Consultant who will issue a Site Instruction. If, in the opinion of Consultant, discrepancies between mechanical drawings and actual site conditions are of a minor nature, required modifications are to be done at no additional cost.

.4 Where existing mechanical services extend through, or are in an area to serve items which are to remain, maintain services in operation. Include for rerouting existing services concealed behind existing finishes and which become exposed during renovation work, so as to be concealed behind new or existing finishes.

## 3.02 HAZARDOUS WASTE

.1 Be advised that items such as drainage sumps, catch basins, interceptors, and the like may contain unidentified hazardous waste and caution is to be taken when disconnecting and removing these items.

.2 If hazardous waste not listed in Specification is found, notify Owner and Consultant immediately and await directions.

## 3.03 INTERRUPTION TO AND SHUT-DOWN OF MECHANICAL SERVICES AND SYSTEMS

.1 Co-ordinate shut-down and interruption to existing mechanical systems with Owner. Refer to Division 01 Specifications for shut down requirements.

.2 Upon award of contract, submit a list of anticipated shut-down times and their maximum duration.

.3 Prior to each shut-down or interruption, inform Owner in writing 5 business days in advance of proposed shut-down or interruption and obtain written consent to proceed. Do not shut-down or interrupt any system or service without such written consent.

.4 Perform work associated with shut-downs and interruptions as continuous operations to minimize shut-down time and to reinstate systems as soon as possible, and, prior to any shut-down, ensure materials and labour required to complete the work for which shut-down is required are available at site.

**END OF SECTION**

# 1 GENERAL

## 1.01 SUBMITTALS

.1 Submit shop drawings/product data sheets to regulatory authority for review and approval prior to submitting to Consultant. Conform to following requirements:

.1 submit shop drawings/product data sheets for products specified in this Section except pipe and fittings;

.2 submit complete CAD layout drawings indicating source of water supply with test flow and pressure, "head-end" equipment piping schematic, pipe routing and sizing, and zones, all signed and sealed by a qualified professional mechanical engineer registered in jurisdiction of the work as specified below;

.3 submit copies of calculations, including hydraulic calculations, stamped and signed by same engineer who signs layout drawings, and a listing of design data used in preparing calculations, system layout and sizing, including occupancy-hazard design requirements;

.2 Submit a complete sprinkler system test certificate as specified in Part 3 of this Section.

.3 Sprinklers are to be identified on drawings and product submittals, and be specifically identified by manufacturer's listed model or series designation. Trade names and other abbreviated listings are unacceptable.

## 1.02 QUALITY ASSURANCE

.1 Fire protection sprinkler system work is to be in accordance with following codes and standards:

.1 NFPA 13, Standard for the Installation of Sprinkler Systems;

.2 CSA B137.2, Polyvinylchloride (PVC) Injection-Moulded Gasketed Fittings for Pressure Applications;

.3 CSA B137.3, Rigid Polyvinylchloride (PVC) Pipe for Pressure Applications;

.4 ASTM A53, Standard Specification for Pipe, Steel, Black and Hot-Dipped, Zinc Coated, Welded and Seamless;

.5 ASTM A135, Standard Specification for Electric-Resistance-Welded Steel Pipe;

.6 ASTM A234, Standard Specification for Piping Fittings of Wrought Carbon Steel and Alloy Steel for Moderate and High Temperature Service;

.7 ASTM A536, Standard Specification for Ductile Castings;

.8 ASTM A795, Standard Specification for Black and Hot-Dipped Zinc Coated (Galvanized) Welded and Seamless Steel Pipe for Fire Protection Use;

.9 ANSI/ASME B16.4, Grey Iron Threaded Fittings (Classes 125 and 250);

.10 CAN/CSA B64.10, Backflow Preventers and Vacuum Breakers.

.2 Fire protection sprinkler work is to be performed by a sprinkler company who is a member in good standing of Canadian Automatic Sprinkler Association. Site personnel are to be licensed in jurisdiction of the work and under continuous supervision of a foreman who is experienced fire protection system installer and journeyman pipe fitter licensed in jurisdiction of the work.

.3 Check and verify dimensions and conditions at site and ensure work can be performed as indicated. Coordinate work with trades at site and accept responsibility for and cost of making adjustments to piping and/or spacing to avoid interference with other building components.

.4 Verify working condition of existing sprinkler system equipment which has direct interface with project work and is to remain. Replace with new equipment where necessary.

.5 System components must be ULC listed and labelled.

.6 Grooved couplings, and fittings, valves and specialties are to be products of a single manufacturer. Grooving tools are to be of same manufacturer as grooved components.

.7 Castings used for coupling housings, fittings, valve bodies, etc., are to be date stamped for quality assurance and traceability.

## 1.03 DESIGN REQUIREMENTS

.1 Design fire protection sprinkler work in accordance with NFPA 13 and local Provincial Standards, and, where required, local building and fire department requirements and standards of Owner's Insurer. If water supply flow and pressure test data is not available, conduct Municipal main water flow and pressure tests at nearest fire hydrant to obtain criteria to be used in system design. Include hydrant location and flow and pressure test data with system design calculations.

.2 Include for a qualified mechanical professional engineer registered and licensed in the jurisdiction of the work to design the fire protection sprinkler work. Refer to Section entitled Mechanical Work General Instructions for requirements regarding Contractor retained engineers.

.3 Sprinkler/System Occupancy – Hazard Design requirements: In accordance with NFPA 13 occupancy-hazard density requirements, unless otherwise specified.

# 2 PRODUCTS

## 2.01 PIPE, FITTINGS AND JOINTS

.1 Pipe, fittings and joints are to be as follows, with exceptions as specified in Part 3 of this Section:

.1 Schedule 40 Steel – Grooved Coupling Joints

.1 Schedule 40 mild black carbon steel, ASTM A53, Grade B, complete with grooved ends and mechanical fittings and couplings, Victaulic "FireLock" fittings and Victaulic Style 009N, 107H, and 107N QuickVic and 005 or approved equal, rigid coupling joints. Strap type outlet fittings such as Victaulic "Snap-Let" are not acceptable.

.2 Schedule 40 Steel – Screwed and Welded Joints

.1 Schedule 40 mild black carbon steel, ASTM A53, Grade B. Screwed piping complete with Class 125 cast iron screwed fittings to ANSI/ASME B16.4. Welded piping complete with factory made seamless carbon steel butt welding fittings to ASTM A234, Grade WPB, long sweep pattern wherever possible.

.3 Standard Mechanical Couplings: Equal to Victaulic

.1 Manufactured in two segments of cast ductile iron, conforming to ASTM A-536, Grade 65-45-12. Gaskets are to be pressure-responsive synthetic rubber, grade to suit intended service, conforming to ASTM D-2000. Mechanical coupling bolts are to be zinc plated (ASTM B-633) heat treated carbon steel track head conforming to ASTM A-449 and ASTM A-183. Couplings are to comply with ASTM F1476 - Standard Specification for Performance of Gasketed Mechanical Couplings for Use in Piping Applications.

.2 Rigid Type: Coupling housings with offsetting, angle-pattern bolt pads are to be used to provide system rigidity and support and hanging in accordance NFPA-13. Couplings are to be fully installed at visual pad-to-pad offset contact. Couplings that require exact gapping of bolt pads at specific torque ratings are not permitted.

.3 Flexible Type: Use in locations where vibration attenuation and stress relief are required; Victaulic Style 177 (Quick-Vic™) or approved equal, flexible coupling.

## 2.02 SPRINKLER HEADS

.1 Sprinkler heads, unless otherwise specified, are to be as scheduled in Part 3 of this Section.

.2 Sprinkler body is to be die-cast, with hex-shaped wrench boss integrally cast into sprinkler body to reduce risk of damage during installation. Wrenches are to be provided by sprinkler manufacturer that directly engages wrench boss.

.3 For locations where corrosive resistant coatings are required, body is to be coated with ULC listed and FM approved anti-corrosion VC-250 coating (silver colouring).

.4 Sprinkler heads for healthcare facilities are to be quick response type.

.5 Recessed sprinkler heads in finished areas are to be chrome plated unless otherwise specified. Concealed sprinkler head ceiling plates are to match ceiling colour.

.6 Where exposed pendent heads occur in areas with suspended ceilings, they are to be complete with chrome plated escutcheon plates. Similarly, sidewall heads with concealed piping are to be complete with chrome plated escutcheon plates.

.7 Sprinkler heads which are exposed in areas where they may be subject to damage are to be complete with wire guards, chrome plated where in finished areas.

.8 Escutcheons and guards are to be listed, supplied, and approved for use with sprinkler by sprinkler manufacturer.

.9 Sprinkler heads located in areas or over equipment where high ambient temperature is present are to be, unless otherwise specified, 93°C (200°F) heads. Other heads, unless otherwise specified or required, are to be 68°C (155°F) rated.

.10 Acceptable manufacturers are:

.1 Victaulic Co.;

.2 Tyco Fire Suppression & Building Products;

.3 The Viking Corporation;

.4 The Reliable Automatic Sprinkler Co.

## 3 EXECUTION

### 3.01 MONITORING OF SYSTEMS

.1 Daily monitor and supervise existing sprinkler system serving renovated areas to ensure that each respective system is left in proper operating condition at end of each working day. Include for but not be limited to performing following:

.1 Under presence of Owner's representative, check each morning and evening (start and end of work) of each day, sprinkler system to ensure that it is in proper working condition;

.2 If portions of sprinkler system is not in proper working order, provide temporary provisions subject to approval of local fire authority or local governing authority, to ensure that proper sprinkler coverage is provided and/or provide supervisory personnel to monitor areas where sprinkler system is not operational;

.3 Document and sign off with Owner's representative signing off also, each respective daily check condition;

.4 Ensure that work to sprinkler system does not affect portion of system serving areas outside of renovation areas.

### 3.02 DEMOLITION

.1 Refer to demolition requirements specified in Section entitled Demolition and Revision Work.

### 3.03 PIPING INSTALLATION REQUIREMENTS

.1 Provide required sprinkler system piping.

.2 Perform piping work in accordance with requirements of NFPA 13, governing regulations, and "Reviewed" shop drawings.

.3 Piping, unless otherwise specified, is as follows:

.1 for piping inside building and above ground except as noted below – Schedule 40 grooved end black steel with Victaulic or equal fittings and coupling joints, or, for piping to and including 50 mm (2") diameter, screwed fittings and joints, or, for piping 65 mm (2-½") diameter and larger, welding fittings and welded joints;

.2 for piping downstream of "head end" alarm valve(s) and equipment – Schedule 10 or "Lightwall" black steel pipe with Victaulic or equal fittings and coupling joints or screwed fittings and joints;

.4 Pipe sizes, pipe routing, sprinkler head quantities and locations, and layout of work shown on drawings are to assist during Bid period. Ensure adequate head coverage, head quantities and pipe sizing as specified in Part 1 of this Section. Do not reduce size of sprinkler main or re-route main unless reviewed with Consultant and accepted by Owner.

.5 Install grooved joints in accordance with manufacturer's latest installation instructions. Grooved ends are to be clean and free from indentations, projections and roll marks. Gaskets are to be moulded and produced by coupling manufacturer, and verified as suitable for intended service. Have factory-trained representative from mechanical joint manufacturer provide on-site training in proper use of grooving tools and installation of grooved piping products. Have factory-trained representative periodically review product installation and ensure best practices are being followed. Remove and replace any improperly installed products.

.6 Clean pipe, fittings, couplings, flanges and similar components after erection is complete. Wire brush clean any ferrous pipe, fitting, coupling, flange, hanger, support and similar component which exhibit rust and carefully coat with suitably coloured primer.

.7 When sprinkler work is complete, test system components and overall system(s) and submit completed test certificate and other documentation in accordance with Chapter 8 of NFPA 13.

## 3.04 INSTALLATION OF SPRINKLER HEADS

.1 Provide required sprinkler heads in accordance with following schedule:

| APPLICATION | SPRINKLER HEAD TYPE |
|---|---|
| Healthcare Facility Type I, II or III rooms/areas as per CAN/CSA-Z317.2, Table 1, HVAC Design Criteria, first two columns | Victaulic V38/V39 or Tyco Series RFII "Royal Flush II" concealed pendent |

.2 Sprinkler head manufacturers indicated on schedule are for type indication purposes. Acceptable manufacturers are listed in Part 2 of this Section.

.3 Provide quick response type sprinkler heads for healthcare facilities.

.4 Coordinate sprinkler head locations with drawings, including architectural reflected ceiling plan drawings, and, where applicable, electrical drawings. Coordinate sprinkler head locations in areas with suspended ceilings with location of lighting, grilles, diffusers, and similar items recessed in or surface mounted on ceiling as per reflected ceiling plans. In areas with lay-in tile, centre sprinkler head both ways in lay-in tile wherever possible. Confirm locations prior to roughing-in.

.5 Maintain maximum headroom in areas with no ceilings.

.6 Provide guards for heads where they are subject to damage.

.7 Provide high temperature heads in equipment rooms and similar areas over heat producing or generating equipment.

**END OF SECTION**

# 1 GENERAL

## 1.01 SUBMITTALS

.1 Submit shop drawings and product data sheets for products specified in Part 2 of this Section except for pipe, fittings, and chlorine.

.2 Submit laboratory water purity test results indicating chlorine residual prior to application for Substantial Performance of the Work. Submit certification details of laboratory.

.3 Submit signed test results and inspection and test log cards for each backflow preventer as specified in Part 3 of this Section.

.4 Submit anchor drawings to detail fabrication and installation of water piping anchors. Prepare drawings stamped by professional structural engineer registered and licensed in jurisdiction of the Work.

.5 As specified in Part 3 of this Section, submit letter from anchor design engineer stating anchor installation has been examined at site and anchors are properly fabricated and installed.

## 1.02 QUALITY ASSURANCE

.1 Domestic water piping and valves are in accordance with following codes, regulations and standards (as applicable):

.1 applicable local codes and regulations;

.2 ASTM F1960, Standard Specification for Cold Expansion Fittings with PEX Reinforcing Rings for Use with Cross-linked Polyethylene (PEX) Tubing;

.3 CAN/CSA B125.1, Plumbing Supply Fittings;

.4 CAN/CSA B125.3, Plumbing Fittings;

.5 CAN/CSA B137 Series, Thermoplastic Pressure Piping Compendium;

.6 CAN/ULC S102.2, Standard Method of Test for Surface Burning Characteristics of Flooring, Floor Coverings, and Miscellaneous Materials and Assemblies;

.7 CAN/ULC S101, Fire Endurance Tests of Building Construction and Materials;

.8 NSF/ANSI 14, Plastics Piping System Components and Related Materials;

.9 NSF/ANSI 61, Drinking Water System Components – Health Effects;

.10 NSF/ANSI 372, Drinking Water System Components – Lead Content.

# 2 PRODUCTS

## 2.01 PIPE, FITTINGS AND JOINTS

.1 Hard Copper - Solder Joint

.1 Type "L" hard drawn seamless copper to ASTM B88, complete with copper solder type fittings to ASME/ANSI B16.18 and soldered joints using Canada Metal Co "SILVABRITE 100 lead-free solder for cold water pipe, and 95% tin/ 5% Antimony or "SILVABRITE 100" solder, for other services, or approved equal.

## 2.02 SHUT-OFF VALVES

.1 Ball Valves

.1 Class 600, 4140 kPa (600 psi) WOG rated, lead-free, full port ball type valves.

.2 Forged brass body with solder ends, forged brass cap, blowout-proof stem, solid forged brass chrome plated ball, "Teflon" or "PTFE" seat. and removable lever handle.

.3 Valves in insulated piping are to be complete with stem extensions.

.4 Acceptable manufacturers are:

.1 Toyo Valve;

.2 Milwaukee Valve;

.3 Kitz Corporation;

.4 Apollo Valves;

.5 Watts Canada.

.2 Butterfly Valves - Flanged Joint

.1 Lead free, non-corrosive, minimum 1200 kPa (175 psi) cold water pressure rated, resilient seated butterfly valves.

.2 With coated cast ductile iron lug type body, 300 series stainless steel shaft, 300 series stainless steel disc, and EPDM seat.

.3 Suitable for domestic water bubble-tight dead-end service with valve in position and either side of connecting piping removed.

.4 Butterfly valves to and including 100 mm (4") dia. are equipped with lever handles. Butterfly valves larger than 100 mm (4") dia. are equipped with worm gear operators.

.5 Acceptable manufacturers are:

.1 Crane-Jenkins;

.2 Kitz Corporation;

.3 Apollo Valves;

.4 Watts Canada.

## 2.03 CHECK VALVES

.1 Horizontal

.1 Lead-free, Class 125, bronze, 1380 kPa (200 psi) WOG rated horizontal swing type check valves with solder ends.

.2 Bronze body, cap and disc holder.

.3 PTFE disc

.4 Acceptable manufacturers are:

.1 Toyo Valve;

.2 Milwaukee Valve;

.3 Kitz Corporation;

.4 Apollo Valves.

.2 Vertical

.1 Lead-free, 1725 kPa (250 psi) WOG rated, silent type, spring loaded, vertical lift check valve with soldering ends.

.2 Cast bronze body, cap disc holder and phosphor bronze spring.

.3 Acceptable manufacturers are:

.1 Toyo Valve;

.2 Milwaukee Valve;

.3 Kitz Corporation;

.4 Apollo Valves.

## 2.04 DRAIN VALVES

.1 Lead free, minimum 2070 kPa (300 psi) water rated, 20 mm (¾") dia., straight pattern full port bronze ball valves.

.2 Threaded outlet suitable for coupling connection of 20 mm (¾") dia. garden hose, and a cap and chain.

.3 Acceptable manufacturers are:

.1 Crane -Jenkins;

.2 Kitz Corporation;

.3 Apollo Valves;

.4 Milwaukee Valve;

.5 Dahl Bros.

## 2.05 DOMESTIC HOT WATER PIPING BALANCING VALVES

.1 Lead free, solder or NPT screwed end type as required, ball style, circuit balancing valves.

.2 Designed to facilitate precise flow measurement, precision flow balancing, and positive shut-off.

.3 Capped and valved drain connection, and capped ports for connection to differential pressure meter.

.4 Acceptable manufacturers are:

.1 Bell & Gossett;

.2 Victaulic;

.3 Watts Canada.

## 2.06 PRESSURE REDUCING VALVES

.1 For piping less than or equal to 50 mm (2") diameter:

.1 Lead-free, non-corrosive, non-ferrous direct spring acting pressure reducing valves to CAN/CSA B356.

.2 Factory set at 345 kPa (50 psi) unless otherwise specified or required.

.3 Field adjustable from 175 kPa (25 psi) to 520 kPa (75 psi).

.4 Integral inlet strainer.

.5 Acceptable manufacturers are:

.1 Apollo Valves;

.2 Zurn;

.3 Watts Canada;

.4 Cash-Acme;

.5 Bermad.

.2 For piping greater than or equal to 65 mm (2-½") diameter:

.1 Lead-free, non-corrosive pilot operated pressure reducing valve to CAN/CSA B356.

.2 Factory set at required pressure, field adjustable.

.3 Bronze body and trim, screwed or flanged connections, and brass body pilot valve with stainless steel seat.

.4 Acceptable manufacturers are:

.1 Singer Valve;

.2 Zurn;

.3 Watts Canada;

.4 Bermad.

## 2.07 DOMESTIC HOT WATER THERMOSTATIC MIXING VALVES

.1 Lawler Manufacturing Co. 800 Series "High-Low Thermostatic Mixer", or approved equal, factory assembled rough bronze thermostatic mixing valve assembly complete with rotatable union end inlet piping with check stops and stainless steel strainer screens, union outlet piping with thermometer connection, sized as shown, and following:

.1 mixing valve with liquid motor, stainless steel piston and liner, tamper-resistant control adjustment, and 3-way protection against runaway temperatures, thermal shock, and scalding;

.2 dial type thermometer conforming to requirement specified in Section entitled Basic Mechanical Materials and Methods;

.3 ball type outlet shut-off valve conforming to valve requirements specified and with outlet sized to suit intended applications;

## 2.08 CHLORINE

.1 Sodium hypochlorite to AWWA B300.

## 2.09 WATER HAMMER ARRESTORS

.1 Jay R. Smith 5000 Series, water hammer arrestors with following features:

.1 piston type, sealed, lead free, stainless steel construction;

.2 or upright vertical installations;

.3 factory pre-charged and sealed, pressurized compression chamber;

.4 welded nesting-type expansion bellows surrounded by non-toxic mineral oil;

.5 male treaded nipple connection.

.2 Acceptable manufacturers are:

.1 Jay R. Smith;

.2 Precision Plumbing Products;

.3 Or approved equal.

## 2.10 BACKFLOW PREVENTERS

.1 Reduced Pressure Zone Assembly

.1 Watts Canada, lead-free reduced pressure zone assembly backflow preventers:

.1 No. LF009QT-S for 12 mm (½") sizes;

.2 No LF909QT-S for 20 mm to 50 mm (¾" to 2") sizes;

.3 No. LF909-NRS-S for 65 mm (2-½") and larger sizes;

.4 in accordance with CAN/CSA B64 (including supplements);

.5 bronze or epoxy coated cast iron bronze fitted construction depending on size;

.6 inlet strainer, inlet and outlet shut-off valves, intermediate relief valve, ball valve type test cocks, and proper air gap fitting.

.2 Acceptable manufacturers are:

.1 Watts Canada;

.2 Zurn;

.3 Apollo Valves;

.4 Danfoss Flomatic Corp.

## 3 EXECUTION

### 3.01 DEMOLITION

.1 Refer to demolition requirements specified in Section entitled Demolition and Revision Work.

### 3.02 PIPING INSTALLATION REQUIREMENTS

.1 Provide required domestic water piping. Install piping in accordance with local governing codes and standards and for special piping, also follow manufacturer instructions to suit intended applications.

.2 Piping, unless otherwise specified, is as follows:

.1 for pipe inside building and aboveground in sizes to 100 mm (4") dia: Type "L" hard copper with solder joints or Type "L" hard copper with pressure coupled mechanical joints.

### 3.03 INSTALLATION OF SHUT-OFF AND CHECK VALVES

.1 Refer to Part 3 of Section entitled Basic Mechanical Materials and Methods.

.2 For shut off valves installed on solder joint copper piping up to and including 75 mm (3") diameter, provide ball type valves, and for flanged joints copper or stainless steel piping larger than 75 mm (3") diameter provide butterfly type valves.

### 3.04 INSTALLATION OF DRAIN VALVES

.1 Provide drain valve at bottom of domestic water piping risers, at other piping low points, and wherever else shown.

.2 Locate drain valves so they are easily accessible.

## 3.05 INSTALLATION OF DOMESTIC HOT WATER PIPING BALANCING VALVES

.1 Provide balancing valves in domestic hot water recirculation piping where shown or required.

.2 Locate each valve so it is easily accessible.

## 3.06 INSTALLATION OF PRESSURE REDUCING VALVES

.1 Provide domestic water pressure reducing valves. Install so each valve is readily accessible. Whenever possible, provide pressure reducing valves factory pre-set to required pressures.

.2 Check and test operation, and adjust as required.

## 3.07 INSTALLATION OF DOMESTIC HOT WATER THERMOSTATIC MIXING VALVES

.1 Provide domestic hot water thermostatic mixing valve assembly and wall mount.

.2 Adjust each valve to design requirements and check and test operation. Set maximum temperature limit stops.

.3 Identify each valve and its water temperature delivery setting with engraved nameplate.

## 3.08 INSTALLATION OF WATER HAMMER ARRESTORS

.1 Provide accessible water hammer arrestors in domestic water piping in locations as follows:

.1 in headers at groups of plumbing fixtures;

.2 at top of risers;

.3 at ends of long horizontal runs of piping;

.4 in piping connecting solenoid valves or equipment with integral solenoid valves;

.5 wherever else shown or required by local governing codes and standards.

.2 Install each unit in piping tee either horizontally or vertically in path of potential water shock, in accordance with manufacturer instructions and details.

## 3.09 INSTALLATION OF BACKFLOW PREVENTERS

.1 Provide reduced pressure zone assembly backflow preventer on incoming DCW service and in each direct domestic water connection to equipment other than plumbing fixtures and fittings.

.2 Locate each backflow preventer on floor or wall between 765 mm and maximum 1.5 m (30" and 60") above floor such that it is easily accessible for maintenance and testing. Equip each backflow preventer with air gap fitting and pipe reduced pressure zone water outlet to drain.

.3 Test operation of each backflow preventer in accordance with requirements of CAN/CSA B64 by personnel certified for such testing by governing authorities, and submit signed test results and a properly and clearly identified and marked inspection and test record card for each backflow preventer.

## 3.10 FLUSHING AND DISINFECTING PIPING

.1 Flush and disinfect domestic water piping after leakage testing is complete.

.2 Isolate new piping from existing piping prior to flushing and disinfecting procedures.

.3 Flush piping until foreign materials are removed and flushed water is clear. Provide connections and pumps as required. Open and close valves, faucets, hose outlets, and service connections to ensure thorough flushing.

.4 When flushing is complete, disinfect piping with solution of chlorine in accordance with AWWA C601.

.5 When disinfecting is complete, submit water samples to certified laboratory for purity testing and, when testing indicates pure water in accordance with governing standards, submit copy of test results and fill systems.

**END OF SECTION**

# 1 GENERAL

## 1.01 SUBMITTALS

.1 Submit shop drawings/product data sheets for all products specified in this Section except pipe and fittings.

.2 Submit a copy of plumbing inspection certificate prior to application for Substantial Performance of the Work.

# 2 PRODUCTS

## 2.01 PIPE, FITTINGS AND JOINTS

.1 Copper - Solder Joint

.1 Type DWV hard temper to ASTM B306, with forged copper solder type drainage fittings and 50% lead - 50% tin solder joints.

.2 Cast Iron

.1 Class 4000 cast iron pipe, fittings, and mechanical coupling joints to CAN/CSA B70.

## 2.02 SHUT-OFF AND CHECK VALVES

.1 Shut-off Valves

.1 Class 600, 4140 kPa (600 psi) WOG rated full port ball valves, each complete with a forged brass body, blowout-proof stem, chrome plated solid brass ball, solder or screwed ends as required, and removable lever handle.

.2 Acceptable products are:

.1 Toyo Valve Co. Fig. 5049A or Fig. 5044A;

.2 Milwaukee Valve Co. #BA-155 or #BA -125;

.3 Kitz Corporation Code 58 or Code 59;

.4 Victaulic Co. of Canada Ltd. Series 722;

.5 Apollo Valves # 77-100 or # 77-200;

.6 Watts Industries (Canada) Inc. #FBVS-3C.

.2 Check Valves

.1 Class 125, bronze, 1725 kPa (250 psi) WOG rated vertical lift check valve with solder or screwed ends as required, and, for horizontal piping, Class 125, bronze 1380 kPa (200 psi) WOG rated swing check valves with solder or screwed ends.

.2 Acceptable products are:

.1 Toyo Valve Co. Fig. 231 or Fig. 236 or Fig. 237;

.2 Milwaukee Valve Co. #1510 or #510;

.3 Kitz Corporation Code 36 or Code 22 or Code 23.

**2.03 CLEANOUTS**

.1 Horizontal Piping

.1 TY pipe fitting with an extra heavy brass plug screwed into the fitting.

.2 Vertical Piping

.1 Bronze or copper cleanout tees in copper piping, each complete with a bronze ferrule, and, for cast iron piping, "BARRETT" type cast iron cleanout tees, each gas and water-tight and complete with a bolted cover.

**2.04 FLOOR DRAINS, FUNNEL FLOOR DRAINS AND HUB DRAINS**

.1 Unless otherwise specified or indicated, floor drains are to be vandal-proof drains in accordance with drawing symbol list, each complete with a cast iron body and a trap seal primer connection. Cast iron components are to be factory finished with latex based paint coating.

.2 Floor drains in areas with a tile or sheet vinyl floor finish are to be as above but with a square grate in lieu of a round grate.

.3 Acceptable manufacturers are:

.1 Watts Industries (Canada) Ltd.;

.2 Jay R. Smith Manufacturing Co.;

.3 Zurn Industries Ltd.;

.4 Mifab Inc.

**2.05 BACKWATER VALVES**

.1 Heat bonded powder epoxy coated cast iron in-line type, each complete with a bolted and gasketed cover, bronze flapper, stainless steel extension, and stainless steel hardware.

.2 Acceptable products are:

.1 Watts Industries (Canada) Inc. BV-230-R Series;

.2 Jay R. Smith #7022-CAN;

.3 Zurn #Z-1095-15-MJ.

**3 EXECUTION**

**3.01 DEMOLITION**

.1 Refer to demolition requirements specified in Section entitled Demolition and Revision Work.

## 3.02 DRAIN AND VENT PIPING INSTALLATION REQUIREMENTS

.1 Provide required drainage and vent piping. Pipe, unless otherwise specified, as follows:

.1 for pipe inside building and aboveground in sizes less than or equal to 65 mm (2-½") dia. – type DWV copper;

.2 for pipe inside building and aboveground in sizes greater than or equal to 75 mm (3") dia. – Class 4000 cast iron;

.3 f

.2 Unless otherwise specified, slope horizontal drainage piping aboveground in sizes to and including 75 mm (3") dia. 25 mm (1") in 1.2 m (4'), and pipe 100 mm (4") dia. and larger 25 mm (1") in 2.4 m (8').

.3 Install and slope underground drainage piping to inverts or slopes indicated on drawings to facilitate straight and true gradients between points shown. Verify available slopes before installing pipes.

.4 Unless otherwise specified, slope horizontal branches of vent piping down to fixture or pipe to which they connect with a minimum pitch of 25 mm (1") in 1.2 m (4').

.5 Extend vent stacks up through roof generally where shown but with exact locations to suit site conditions and in any case a minimum of 3 m (10') from fresh air intakes. Terminate vent stacks a minimum of 330 mm (13") above roof (including roof parapets) in vent stack covers. Where not shown on drawings, route vent piping from source to building exterior as required in order to satisfy local governing codes and authority. Coordinate vent routing with other building services and ensure there is no architectural impact.

.6 Provide cast brass dielectric unions at connections between copper pipe and ferrous pipe or equipment.

## 3.03 INSTALLATION OF SHUT-OFF AND CHECK VALVES

.1 Provide a shut-off valve and a check valve in discharge piping of each drainage pump.

.2 Locate valves so they are easily accessible without the use of ladders or other such devices.

## 3.04 INSTALLATION OF CLEANOUTS

.1 Provide cleanouts in drainage piping in locations as follows:

.1 in building drain or drains as close as possible to inner face of outside wall, and, if a building trap is installed, locate cleanout on downstream side of building trap;

.2 at or as close as practicable to the foot of each drainage stack;

.3 at maximum 15 m (50') intervals in horizontal pipe 100 mm (4") dia. and smaller;

.4 at maximum 30 m (100') intervals in horizontal pipe larger than 100 mm (4") dia.;

.5 wherever else shown on drawings.

.2 Cleanouts are to be same diameter as pipe in piping to 100 mm (4") dia., and not less than 100 mm (4") dia. in piping larger than 100 mm (4") dia.

.3 Where cleanouts in vertical piping are concealed behind walls or partitions, install cleanouts near floor and so cover is within 25 mm (1") of the finished face of the wall or partition.

## 3.05 INSTALLATION OF FLOOR DRAINS, FUNNEL FLOOR DRAINS AND HUB DRAINS

.1 Provide floor drains, funnel floor drains and hub drains.

.2 Coordinate location of floor drains, funnel floor drains and hub drains with equipment provided by Mechanical Division and Owner's supplied equipment. Install in accordance with manufacturer's instructions.

.3 Equip each drain with a trap.

.4 In equipment rooms and similar areas, exactly locate floor drains to suit location of mechanical equipment and equipment indirect drainage piping. In washrooms, exactly locate floor drains to avoid interference with toilet partitions.

.5 Confirm exact location of drains prior to roughing in. Where floor drains occur in washrooms coordinate locations with toilet partition installations.

.6 Temporarily plug and cover floor drains during construction procedures. Remove plugs and covers during final clean-up work and when requested, demonstrate free and clear operation of each drain. Replace any damaged grates, and refinish any areas of the drain where cast iron finish has been damaged or removed, including rusted areas.

## 3.06 INSTALLATION OF BACKWATER VALVES

.1 Provide backwater valves in drainage piping and connect with piping.

.2 Set backwater valve assembly such that cover is flush with finished floor. Provide an extension piece if required due to depth of piping.

**END OF SECTION**

# 1 GENERAL

## 1.01 SUBMITTALS

.1 Submit shop drawings/product data sheets for all products specified in this Section, except piping and valves.

# 2 PRODUCTS

## 2.01 PIPE, FITTINGS AND JOINTS

.1 Copper

.1 Type "L" hard drawn seamless copper to ASTM B88, complete with forged solder type fittings to suit pipe, and soldered joints using 95% tin / 5% Antimony solder.

## 2.02 PIPING UNIONS

.1 Soldered Copper Piping

.1 Solder-on forged copper or bronze screwed unions suitable in all respects for the application.

## 2.03 HIGH PRESSURE SHUT-OFF VALVES

.1 Equal to Apollo Valves #70-100-27, 4140 kPa (600 psi) rated Class 600, screwed bronze ball valve with a PTFE seat, automatic relief vent, and removable lever handle.

## 2.04 PIPING SYSTEM COMPONENTS

.1 Outlets equal to DeVair or ARO Fluid Products female bayonet lock type quick-connect outlets with exact type and size as directed, each complete with a non-corrosive hose hanger.

.2 Pressure regulators equal to Watts (CompAir) R119 Series, adjustable, heavy-duty diaphragm type pressure regulators, each complete with a pressure gauge and a mounting bracket.

.3 Filters equal to Watts (CompAir) F602 Series heavy-duty 40 micron filters, each complete with a zinc bowl with sight glass, internal automatic drain, and mounting bracket.

.4 Combination filter-regulator assemblies equal to Watts (CompAir) B11 Series general purpose filter-regulators, each complete with an adjustable diaphragm type pressure regulator with pressure gauge, a 40 micron filter with zinc bowl, sight glass and automatic drain, and a mounting bracket.

# 3 EXECUTION

## 3.01 INSTALLATION OF PIPING AND PIPING SYSTEM COMPONENTS

.1 Provide required compressed air piping. Unless otherwise specified, install horizontal piping to outlets 1.5 m (5') above finished floor level.

.2 Pipe is to be type "L" hard copper, soldered.

.3 Support and secure piping generally as specified in Section entitled Basic Mechanical Materials and Methods but with extra support and securing hardware as required to prevent drumming. Provide rigid supports at each side of outlets.

.4 Extend branch piping to outlets and/or equipment off the top of the main(s).

.5 Provide shut-off valves in piping at all equipment connections, to isolate piping components for removal or maintenance, and wherever else specified or shown. Provide vented type valves between air compressor set and pressure reducing stations.

.6 Provide unions in piping at connections to equipment.

.7 When piping is complete and has been pressure tested, but before connection of outlets, blowout piping to remove oil and foreign matter.

.8 Provide adjustable pressure regulators, filters, compressed air outlets, etc. Unless otherwise indicated locate outlets 1.5 m (5') above floor and properly secured in place. Provide a hose hanger at each outlet location. Confirm exact location of piping components prior to roughing-in.

**END OF SECTION**

# 1 GENERAL

## 1.01 SUBMITTALS

.1 Submit shop drawings/product data sheets for all products specified in this Section except piping and unions.

## 1.02 QUALITY ASSURANCE

.1 Valves and similar items for use in systems with a pressure rating of 105 kPa (15 psi) are to be stamped with a Canadian Registration Number (CRN).

.2 Steam and condensate piping system work is to be in accordance with following:

.1 CSA B51, Boiler, Pressure Vessel, and Pressure Piping Code;

.2 ASME B31, Standards of Pressure Piping;

.3 and governing Provincial and/or Municipal Codes and Regulations.

# 2 PRODUCTS

## 2.01 PIPE, FITTINGS AND JOINTS

.1 Black Steel - Screwed Joint

.1 Mild black carbon steel, Grade B, ASTM A53, complete with Class 125 or Class 250 cast iron threaded fittings to ANSI/ASME B16.4, and screwed joints.

.2 Black Steel - Welded Joint

.1 Mild black carbon steel, Grade B, ASTM A53, mill or site bevelled, complete with factory made seamless carbon steel butt welding fittings to ASTM A234, Grade WPB with a wall thickness to match pipe, and welded joints.

## 2.02 PIPING UNIONS

.1 Screwed Piping

.1 Condensate: Malleable iron, ground joint, factory tested screwed unions and union elbows with a brass to iron seat and a minimum pressure rating of 4140 kPa (600 psi) WOG (non-shock).

.2 Welded Piping

.1 High Pressure Steam: 300 lb. Class welding flange unions as specified for welded condensate piping.

## 2.03 SHUT-OFF VALVES

.1 Ball, gate or globe type valves suitable in all respects for steam and condensate service.

.2 High Pressure Steam and Condensate:

.1 Bronze gate less than or equal to 50 mm (2"):

.1 Class 150 cast bronze gate valves, each equipped with screwed ends, rising stem, cast bronze disc, and cast zinc, or aluminum handwheel.

.2 Acceptable products are:

.1 Kitz Corp. Code No. 42;

.2 Nibco #T-134;

.3 Toyo Valve Co. Fig. 298;

.4 Watts Industries (Canada) Inc. #B-3110.

.2 Bronze globe less than or equal to 50 mm (2"):

.1 Class 150 cast bronze globe valves, each equipped with screwed ends, rising stem, non-metallic disc, and cast zinc or aluminum handwheel.

.2 Acceptable products are:

.1 Kitz Corp. Code No. 09;

.2 Nibco #T-235-Y;

.3 Toyo Valve Co. Fig. 221;

.4 Watts Industries (Canada) Inc. #B-4000.

.3 Cast steel gate greater than or equal to 65 mm (2-½"):

.1 Class 150 OS&Y, rising stem, bolted bonnet cast steel gate valve with plain solid wedge or flexible solid wedge depending on valve size, flanged ends, and ductile iron handwheel.

.2 Acceptable products are:

.1 Kitz Corp. Fig. 150 SCLS;

.2 Bonney Forge Corp. Fig. 1-11-RF;

.3 BERIC Fig. 101-RF-AA08-H.

.4 Cast steel globe greater than or equal to 65 mm (2-½"):

.1 Class 150 OS&Y, rising stem, bolted bonnet cast steel globe valve with swivel disc, flanged ends, and ductile iron handwheel.

.2 Acceptable products are:

.1 Kitz Corp. Fig. 150 SCJS;

.2 Bonney Forge Corp. 1-31-RF;

.3 BERIC Fig. 201-RF-EA08-H.

## 2.04 DRAIN VALVES

.1 Minimum 1725 kPa (250 psi) water rated, 20 mm (¾") diameter straight pattern bronze or brass ball valves, each complete with a stainless steel ball and stem, threaded outlet suitable for coupling connection of 20 mm (¾") hose, locking handle, and a cap and chain.

.2 Acceptable products are:

.1 Toyo Valve Co. Ltd. Fig 5046;

.2 Nibco #T-585-70-HC;

.3 Kitz Corp. Code No. 68AC;

.4 Apollo Valve # 70-140-64;

.5 Watts Industries (Canada) Inc. #B-6000-CC.

## 2.05 FLEXIBLE PIPE CONNECTIONS

.1 Flexible metal hose assemblies, each complete with annular corrugated un-braided type 321 stainless steel inner core, braided type 321 seamless steel hose, and a collar and flange at each end, all suitable for twice the working pressure of the system.

.2 Acceptable products are:

.1 The Metraflex Co. Model SST and "METRA-MINI";

.2 Senior Flexonics Inc. A1 and A6 Series.

## 2.06 AIR VENTS

.1 High Pressure Steam:

.1 Brass alloy body and cap float type air vent with plastic float, rubber valve, and stainless steel valve seat and check valve.

.2 Acceptable products are:

.1 Spirax Sarco Canada Ltd. Model AE 30;

.2 Flowserve Gestra.

## 2.07 STRAINERS

.1 Cast iron wye shaped strainers, screwed or flanged as required, minimum 1035 kPa (150 psi) rated and complete with a removable type 304 stainless steel screen with perforations sized to suit the application, and, for strainers 50 mm (2") diameter and larger, a blowdown pipe connection tapping.

.2 Acceptable manufacturers are:

.1 Spirax Sarco Canada Ltd.;

.2 Toyo Valve Co, Ltd.;

.3 Armstrong International Inc.;

.4 Kitz Corp.;

.5 Watts Industries (Canada) Inc.;

.6 Mueller Steam Specialty Products.

**2.08 STEAM DRIP TRAPS**

.1 Steam drip traps selected to suit inlet pipe size and inlet steam pressure, and as follows:

.1 Thermodynamic Traps:

.1 Maximum 4135 kPa (600 psi) rated, integral seat design stainless steel thermodynamic type traps, each complete with an integral strainer and insulating cover.

.2 Acceptable products are:

.1 Spirax Sarco Canada Ltd. "TD" Series;

.2 Flowserve Gestra DK Series;

.3 Armstrong International Inc.

**2.09 STEAM VACUUM BREAKERS**

.1 Screwed brass body vacuum breakers, each complete with screw-in brass cap, and stainless steel valve and valve seat.

.2 Acceptable products are:

.1 Spirax Sarco Canada Ltd. Model VB14;

.2 Flowserve Gestra Type FVS;

.3 Armstrong International Inc.

**3 EXECUTION**

**3.01 DEMOLITION**

.1 Perform required steam and condensate piping demolition/revision work. Refer to demolition requirements specified in Section entitled Demolition and Revision Work.

**3.02 STEAM AND CONDENSATE PIPING INSTALLATION REQUIREMENTS**

.1 Provide required steam and condensate piping.

.2 Perform piping work with working pressures above 105 kPa (15 psi) in accordance with requirements of CSA B51 and ASME B31.

.3 Piping, unless otherwise specified, is to be mild black steel, screwed for pipe to and including 50 mm (2") diameter, screwed or welded for pipe 65 mm (2-½") diameter and larger, and as follows:

.1 low pressure steam – screwed: Schedule 40, complete with Class 125 screwed fittings;

.2 high pressure steam – screwed: Schedule 40, complete with Class 250 screwed fittings;

.3 condensate, all pressures – screwed: Schedule 80, complete with Class 250 screwed fittings;

.4 high pressure steam – welded: Schedule 40 with butt weld fittings;

.4 Unless otherwise specified, slope horizontal steam mains down 25 mm (1") in 6 m (20') in direction of flow. Steam mains may be run level if frequently and adequately dripped with equal tee connections and trapped at and through riser connections, however, slope such steam mains, if no branches are connected thereto for more than 7.5 m (25'), 25 mm (1") in a 6 m (20') as specified above. Provide equal tee drip stations every 36 m (120') to 45 m (150") in steam mains greater than 100 mm (4") diameter.

.5 Unless otherwise approved, slope horizontal condensate return mains 65 mm (2-½") diameter and larger 25 mm (1") in 6 m (20'). Slope smaller condensate return lines and condensate drip piping not less than 25 mm (1") in 3 m (10'). Slope condensate piping in direction of flow.

.6 Slope steam supply and condensate return branch connections to and from equipment a minimum of 25 mm (1") in 1.8 m (6'), slope being downward to risers to which branch piping connects. Increase this slope wherever necessary to prevent trapping due to expansion of risers, or provide steam drip trap assemblies.

.7 Extend branch steam supply piping off top of horizontal mains, either 90° vertically or at a 45° angle, as space permits.

.8 Make changes in pipe size in horizontal steam and condensate piping with eccentric fittings flush with the pipe on the bottom. Do not use bushings in any piping.

.9 Install automatic control valves, piping wells and similar piping and/or equipment mounted control components required for automatic temperature control systems and supplied as part of the control work. Refer to drawing control diagrams and details.

.10 Include for required steam and condensate piping and accessories for connections to Owner’s equipment.

## 3.03 INSTALLATION OF UNIONS

.1 Provide screwed unions or weld-on flange joint unions in piping connections to valves, strainers and similar piping system components which may need maintenance or repair, at all equipment connections, in long runs of piping exceeding 9 m (30') at 4.5 m (15') intervals to permit removal of sections of piping, and wherever else indicated on drawings.

## 3.04 INSTALLATION OF SHUT-OFF VALVES

.1 Refer to Part 3 of Section entitled Basic Mechanical Materials and Methods.

.2 Valves in low pressure steam and condensate piping where a throttling or balancing action is required are to be globe type. All other valves are to be ball or gate type.

.3 Valves in high pressure steam and condensate piping where a throttling or balancing action is required are to be globe type. All other valves are to be gate type.

## 3.05 INSTALLATION OF DRAIN VALVES

.1 Provide a drain valve at base of each piping riser, in drain connections to equipment, and wherever else shown and/or specified. At bottom of risers provide minimum 200 mm (8") long, minimum 25 mm (1") diameter capped dirt pockets with drain valves.

## 3.06 INSTALLATION OF FLEXIBLE PIPING CONNECTIONS

.1 Provide flexible connections in steam and feedwater connections to each steam boiler.

.2 Install flexible connections in accordance with manufacturer’s instructions.

## 3.07 INSTALLATION OF AIR VENTS

.1 Provide proper air vents at the end of steam mains, and at the top of steam risers.

## 3.08 INSTALLATION OF STRAINERS

.1 Provide a strainer at each steam drip trap, and in piping. Locate strainers so baskets are easily removable. Clean strainer baskets after piping system flushing and cleaning is complete.

## 3.09 INSTALLATION OF STEAM DRIP TRAPS

.1 Provide a steam drip trap assembly in condensate return piping from each piece of equipment, at base of each riser, in horizontal steam mains as specified, and wherever it is necessary to raise piping to avoid a reduction in ceiling height or minimum headroom allowances. Size drip traps to correspond with condensate return piping sizes unless otherwise specified. Equip each drip trap with shut-off valve(s), 2 unions located immediately upstream and downstream of trap, a strainer, sensing chamber, and a dirt pocket.

.2 Unless otherwise specified, provide thermodynamic type drip traps in steam mains with a working pressure greater than 140 kPa (20 psi) and 140 kPa (20 psi) and greater piping to equipment.

.3 Unless otherwise specified, provide float and thermostatic type drip traps in low pressure steam mains with a working pressure less than 140 kPa (20 psi) and less than 140 kPa (20 psi) in piping to equipment.

.4 Provide balanced pressure thermostatic type drip traps for direct steam radiation units.

.5 Connect low pressure condensate drip piping from steam drip trap assemblies into condensate return piping unless otherwise shown on drawings or specified herein. Do not connect condensate return piping into discharge of traps draining steam mains.

## 3.10 INSTALLATION OF STEAM VACUUM BREAKERS

.1 Provide vacuum breakers in steam inlet piping after each temperature control valve to closed steam actuated vessels such as coils and heat exchangers, and in steam piping wherever required to control induced vacuum within safety limits when condensate is discharged into return line by gravity. Mount each vacuum breaker vertically, unless otherwise specified.

## 3.11 FLUSHING AND CLEANING PIPING

.1 Flush and clean new piping in accordance with requirements specified in Section entitled HVAC Water Treatment.

**END OF SECTION**

# 1 GENERAL

## 1.01 SUBMITTALS

.1 Submit shop drawings/product data sheets for all products specified in this Section except shop fabricated ductwork and fittings.

.2 Include capacity, throw and terminal velocity, noise criteria, and pressure drops with grille and diffuser shop drawing/product data sheet submission.

## 1.02 QUALITY ASSURANCE

.1 Grilles and diffusers are to be tested and performance certified to ANSI/ASHRAE 70, Method of Testing the Performance of Air Outlets and Air Inlets.

# 2 PRODUCTS

## 2.01 GALVANIZED STEEL DUCTWORK

.1 Galvanized steel sheet is to be hot dipped in accordance with requirements of ASTM A653. Provide G60 galvanizing for bare uncovered duct and with finish paint. Provide G90 galvanizing for other galvanizing.

.2 Rectangular

.1 Lock forming grade hot dip galvanized steel, ASTM A653, shop fabricated, minimum #26 gauge.

.3 Round

.1 Factory machine fabricated, spiral, mechanically locked flat seam, single wall duct, fittings and couplings.

.4 Flat Oval

.1 Factory machine fabricated, single wall, 4-ply spiral lock seam duct, fittings and couplings.

## 2.02 METAL DUCT SYSTEM JOINT SEALANT

.1 ULC listed and labelled, premium grade, grey colour, water base, non-flammable duct sealer, brush, or gun applied, with a CAN/ULC S102 tested maximum flame spread rating of 5 and smoke developed rating of 0.

.2 Acceptable manufacturers are:

.1 Duro Dyne Canada Inc.

.2 Ductmate Industries.

.3 H.B. Fuller Company (Foster).

## 2.03 MANUAL BALANCING (VOLUME) DAMPERS

.1 Flanged and drilled, single or parallel blade (depending on damper size) manual balancing dampers, each constructed of same material as connecting ductwork unless otherwise specified, each designed to maintain internal free area of connecting duct, and each complete with:

.1 hexagonal or square shaft extension through frame;

.2 non-stick, non-corrosive synthetic bearings for rectangular dampers, flange stainless steel bearings for round dampers;

.3 blade stops for single blade dampers, designed to prevent blade from moving more than 90°;

.4 linkage for multiple blade dampers;

.5 locking hand quadrant damper operator with 50 mm (2") standoff mounting for insulated ducts.

.2 Rectangular Dampers: Nailor Industries Inc. 1800 Series, maximum size 1.2 m x 1.2 m (4' x 4') for a single damper.

.3 Round Dampers: Nailor Industries Inc. Model 1890, maximum 600 mm (24") diameter, equipped with a minimum 200 mm (8") deep frame, and blade stiffeners where required.

.4 Multiple Rectangular Damper Section Assembly: Rectangular assembly supplied with the dampers or site constructed, of same material as damper and designed for tight and secure mounting of individual dampers.

.5 Acceptable manufacturers are:

.1 Nailor Industries Inc.;

.2 T.A. Morrison & Co. Inc. "TAMCO";

.3 NCA Manufacturing Ltd.;

.4 Greenheck Fan Corp.;

.5 Ruskin Co.

## 2.04 DUCT ACCESS DOORS

.1 In accordance with ANSI/SMACNA HVAC Duct Construction Standards Metal and Flexible, with sizes suitable in all respects for purpose for which they are provided, and, unless otherwise specified, constructed of same material as duct they are associated with.

## 2.05 DUCTWORK DRAIN POINTS

.1 Equal to Ductmate Canada Ltd. "Moisture Drain", 20 mm (¾") diameter moisture drains with galvanized sheet metal funnel, and chrome plated brass threaded drain, nut and cap.

## 2.06 WIRE MESH (BIRDSCREEN)

.1 Heavy-gauge galvanized steel or aluminum mesh, 12 mm x 12 mm (½" x ½") secured in a rigid galvanized steel or aluminum framework, sized as indicated on drawings, and constructed so as to be removable.

## 2.07 GRILLES AND DIFFUSERS

.1 Grilles and diffusers of type, size, capacity, finish, and arrangement as shown on drawings and in accordance with drawing schedule, each equipped with all required mounting and connection accessories to suit mounting location and application.

.2 Acceptable manufacturers are:

.1 Price Industries Inc.;

.2 Anemostat;

.3 Krueger Division of Air System Components Inc.;

.4 Titus;

.5 Nailor Industries Inc.;

.6 Tuttle & Bailey.

# 3 EXECUTION

## 3.01 CLEANLINESS REQUIREMENTS FOR HANDLING AND INSTALLATION OF DUCTWORK

.1 Handle and install ductwork in accordance with CSA Z317.2, Special Requirements for Heating, Ventilation, and Air-Conditioning (HVAC) Systems in Healthcare Facilities and SMACNA's Duct Cleanliness for New Construction Guidelines at the Advanced Level.

## 3.02 FABRICATION AND INSTALLATION OF GALVANIZED STEEL DUCTWORK

.1 Provide required ductwork, rectangular, round and/or flat oval. Where rectangular ductwork is shown, round or flat oval ductwork of equivalent cross-sectional area is acceptable.

.2 It is to be understood that all duct dimensions shown on drawings are clear internal dimensions.

.3 Unless otherwise specified, construct and install ductwork in accordance with ANSI/SMACNA HVAC Duct Construction Standards Metal and Flexible to suit duct pressure class designation of minimum 500 Pa (2" w.c.) positive or negative as applicable, a minimum velocity of 10 m/s (2000 fpm), and so ductwork does not "drum". Flat surfaces of rectangular ductwork are to be cross-broken. Duct system sealing is to meet ANSI/SMACNA Seal Class A requirements.

.4 Confirm routing of all ductwork at site and site measure ductwork prior to fabrication. Duct dimensions may be revised to suit site routing and building element requirements, if dimension revisions are reviewed with and approved by Consultant. Duct routing and/or dimension revisions to suit conditions at site are not grounds for a claim for an extra cost.

.5 Refer to structural drawings. Where ductwork is to be run within or through open web steel joists, ductwork shown on mechanical drawings is schematic only and is to be altered as required to suit steel joist configuration, spacing, panel points, and cross-bridging at no additional cost.

.6 Wherever ductwork is required at locations where sprayed fireproofing is applied to building construction, install ductwork only after fireproofing work is complete and do not compromise fire rating of sprayed fireproofing.

.7 Install (but do not connect) duct system mounted automatic control components supplied as part of the automatic control work.

.8 Where indicated, provide duct connections to fan powered heat transfer equipment with integral coils.

.9 Flange connect ductwork to hot water reheat coils in accordance with requirements of ANSI/SMACNA HVAC Duct Construction Standards Metal and Flexible. Coils will be suspended independent of connecting ductwork as part of the heat transfer work.

.10 Support horizontal rectangular ducts inside building in accordance with ANSI/SMACNA HVAC Duct Construction Standards Metal and Flexible, but use trapeze hangers with, unless otherwise specified, galvanized steel channels, and galvanized steel hanger rods for exposed ducts and concealed ducts wider than 500 mm (20"). Support hardware constructed of same material as duct for metal duct, and, unless otherwise specified, type 316 stainless steel for non-metal duct. Supports for "heavy" duct such as cementitious core duct is to be suitable in all respects for the application and approved by Consultant.

.11 Support round and flat oval ducts inside building in accordance with ANSI/SMACNA HVAC Duct Construction Standards Metal and Flexible, but, unless otherwise specified, for both uninsulated and insulated ducts exposed in finished areas, use bands and secure at top of duct to a hanger rod, all similar to Ductmate Canada Ltd. type "BA". If duct is insulated, size strap to suit diameter of insulated duct. Unless otherwise specified, duct support hardware for metal duct is constructed of same material as duct, and for non-metal duct, type 316 stainless steel.

.12 Where flanged duct joints are used, do not locate joints in wall or slab openings, or immediately at wall or slab openings. Do not use flanged joints for exposed uninsulated ducts in finished areas.

.13 Seal all ductwork in accordance with SMACNA Seal Class "A", except for round duct with self-sealing gasketed fittings and couplings which does not require site applied sealant. Apply sealants by brush or gun to cleaned metal surfaces. Where bare ductwork is exposed apply neat uniform lines of sealant. Randomly brushed, sloppy looking sealant applications will be rejected and must be repaired or replaced with a neat application of sealant.

.14 Apply sealants by brush or gun to cleaned metal surfaces. Where bare ductwork is exposed apply neat uniform lines of sealant. Randomly brushed, sloppy looking sealant applications will be rejected and must be repaired or replaced with a neat application of sealant.

.15 Clean exterior exposed (uninsulated) ducts and coat with a heavy full coverage of Bakor #410-02 black metal paint.

.16 Where dissimilar metal ducts are to be connected, isolate ducts by means of flexible duct connection material.

## 3.03 INSTALLATION OF MANUAL BALANCING (VOLUME) DAMPERS

.1 Provide manual balancing dampers as required to provide a fully balanced system, including but not limited to in all open end ductwork, in all duct mains, and wherever else shown and/or specified.

.2 Install dampers so operating mechanism is accessible and positioned for easy operation, and so dampers cannot move or rattle. Ensure operating mechanisms for dampers in insulated ducts are complete with stand-off mounting brackets.

.3 Confirm exact damper locations with personnel doing air quantity balancing testing work and install dampers to suit. Include for providing 5 additional dampers at no additional cost.

## 3.04 INSTALLATION OF WIRE MESH (BIRDSCREEN)

.1 Provide framed, removable wire mesh panels over openings in ducts and/or walls where shown and/or specified on drawings. Rigidly secure in place but ensure panels are removable.

.2 Provide wire mesh panels for open-end return air ducts in ceiling spaces whether shown on drawings or not.

## 3.05 INSTALLATION OF GRILLES AND DIFFUSERS

.1 Provide grilles and diffusers. Wherever possible, grilles and diffusers are to be product of same manufacturer.

.2 Unless otherwise specified connect grilles and diffusers in accordance with requirements of SMACNA HVAC Duct Construction Standards Metal and Flexible.

.3 Exactly locate grilles and diffusers to conform to final architectural reflected ceiling plans and detailed wall elevations, and to conform to final lighting arrangement, ceiling layout, ornamental and other wall treatment.

.4 Equip supply diffusers having a basic 4-way or all round air pattern for operation in 1-, 2-, or 3-way pattern where indicated on drawings.

.5 Confirm grille and diffuser finishes prior to ordering.

## 3.06 DUCT SYSTEM PROTECTION, CLEANING AND START-UP

.1 Temporarily cover all open ends of ducts during construction.

.2 Remove all dirt and foreign matter from entire duct systems and clean duct system terminals and interior of air handling units prior to operating fans.

.3 Prior to starting any supply air handling system provide 50 mm (2") thick glass fibre construction filters at fan equipment in place of permanent filters.

.4 Provide cheesecloth over duct system inlets and outlets and run system for 24 hours, after which remove cheesecloth and construction filters, and install new permanent filters.

.5 Include all labour for a complete site walk-through with testing and balancing personnel following route of all duct systems to be tested, adjusted and balanced for the purpose of confirming proper position and attitude of dampers, location of pitot tube openings, and any other work affecting testing and balancing procedures. Perform corrective work required as a result of this walk-through.

**END OF SECTION**

**DIVISION 26/27/28 - ELECTRICAL**


| | |
|---|---|
| 26 00 10 | ELECTRICAL WORK GENERAL INSTRUCTIONS |
| 26 05 00 | BASIC ELECTRICAL MATERIALS AND METHODS |
| 26 05 19 | LOW VOLTAGE CABLES |
| 26 05 20 | WIRE AND BOX CONNECTORS 0-1000V |
| 26 05 26 | GROUNDING AND BONDING |
| 26 05 29 | HANGERS AND SUPPORTS ELECTRICAL SYSTEMS |
| 26 05 31 | SPLITTERS, JUNCTION, PULL BOXES |
| 26 05 32 | OUTLET BOXES, CONDUIT BOXES AND FITTINGS |
| 26 05 34 | CONDUITS, CONDUIT FASTENINGS AND FITTINGS |
| 26 05 70 | ELECTRICAL WORK ANALYSIS AND TESTING |
| 26 05 90 | HAZARDOUS MATERIALS |
| 26 27 26 | WIRING DEVICES |
| 26 28 16.02 | MOULDED CASE CIRCUIT BREAKERS |
| 26 28 23 | DISCONNECT SWITCHES – FUSED AND NON-FUSED |
| 26 50 00 | LIGHTING |
| 27 05 28 | PATHWAYS FOR COMMUNICATIONS SYSTEMS |
| 27 10 00 | STRUCTURED CABLING |
| 28 31 00 | FIRE ALARM SYSTEM |


**END OF SECTION**

## PART 1 - GENERAL

### 1.01 REFERENCES

.1 Division 00 and Division 01 apply to and are a part of this Section.

### 1.02 APPLICATION

.1 This Section specifies requirements that are common to Electrical Divisions work Sections and it is a supplement to each Section and is to be read accordingly. Where requirements of this Section contradict requirements of Divisions 00 or 01, conditions of Division 00 or 01 to take precedence.

.2 Advise product vendors of requirements of this Section.

### 1.03 DEFINITIONS

.1 "concealed" – means hidden from normal sight in furred spaces, shafts, ceiling spaces, walls and partitions.

.2 "exposed" – means work normally visible, including work in equipment rooms, service tunnels, and similar spaces.

.3 "finished" - means when in description of any area or part of an area or a product which receives a finish such as paint, or in case of a product may be factory finished.

.4 “provision” or "provide" (and tenses of "provide") – means supply and install complete.

.5 "install" (and tenses of "install") – means secure in position, connect complete, test, adjust, verify and certify.

.6 "supply" – means to procure, arrange for delivery to site, inspect, accept delivery and administer supply of products; distribute to areas; and include manufacturer’s supply of any special cables, standard on site testing, initial start-up, programming, basic commissioning, warranties and manufacturers’ assistance to Contractor.

.7 "delete" or "remove" (and tenses of "delete" or "remove") – means to disconnect, make safe, and remove obsolete materials including back boxes and exposed piping and raceways; and patch and repair/finish surfaces to match adjoining similar construction; include for associated re-programming of systems and/or change of documentation identifications to suit deletions, and properly dispose of deleted products off site unless otherwise instructed by Owner and reviewed with Consultant.

.8 "barrier-free" - means when applied to a building and its facilities, that building and its facilities can be approached, entered and used by persons with physical or sensory disabilities in accordance with requirements of local governing building code.

.9 "BAS" – means building automation system; "BMS" – means building management system, "FMS" – means facility management system; and "DDC"

means direct digital controls; references to "BAS", "BMS", "FMS" and "DDC" generally mean same.

.10 "governing authority" and/or "authority having jurisdiction" and/or "regulatory authority" and/or "Municipal authority" – means government departments, agencies, standards, rules and regulations that apply to and govern work and to which work must adhere.

.11 "OSHA" and "OHSA" – stands for Occupational Safety and Health Administration and Occupational Health and Safety Act, and wherever either one is used, they are to be read to mean local governing occupational health and safety regulations that apply to and govern work and to which work must adhere, regardless if Project falls within either authority's jurisdiction.

.12 "Mechanical Divisions" - refers to Divisions 20, 21, 22, 23, 25 and other Divisions as specifically noted, and which work as defined in Specifications and/or on drawings is responsibility of Mechanical Contractor, unless otherwise noted.

.13 "Electrical Divisions" – refers to Divisions 26, 27, 28 and other Divisions as specifically noted, and which work as defined in Specifications and/or on drawings is responsibility of Electrical Contractor, unless otherwise noted.

.14 "Consultant" – means person, firm or corporation identified as such in Agreement or Documents, and is licensed to practice in Place of the Work, and has been appointed by Owner to act for Owner in a professional capacity in relation to the Work.

.15 Wherever words "indicated", "shown", "noted", "listed", or similar words or phrases are used in Contract Documents they are understood, unless otherwise defined, to mean product referred to is "indicated", "shown", "listed", or "noted" on Contract Documents.

.16 Wherever words "reviewed", "satisfactory", "as directed", "submit", or similar words or phrases are used in Contract Documents they are understood, unless otherwise defined, to mean that work or product referred to is "reviewed by", "to the satisfaction of", "submitted to", etc., Consultant.

## 1.04 DOCUMENTS

.1 Documents for bidding include but are not limited to issued Drawings, Specifications and Addenda.

.2 Specification is arranged in accordance with CSI/CSC 50 Division Sections MasterFormat.

.3 Drawings and Specifications are portions of Contract Documents and identify labour, products and services necessary for performance of work and form a basis for determining pricing. They are intended to be cooperative. Perform work that is shown, specified, or reasonably implied on drawings but not mentioned in Specification, or vice-versa, as though fully covered by both.

.4 Review Drawings and Specification in conjunction with documents of other Divisions and, where applicable, Code Consultant’s report.

.5 Unless otherwise specifically noted in Specifications and/or on Drawings, Sections of Electrical Divisions are not intended to delegate functions nor to delegate work

and supply of materials to any specific trade, but rather to generally designate a basic unit of work, and Sections are to be read as a whole.

.6 Drawings are performance drawings, diagrammatic, and show approximate locations of equipment and materials. Any information regarding accurate measurement of building is to be taken on site. Do not scale Drawings, and do not use Drawings for prefabrication work.

.7 Drawings are intended to convey scope of work and do not show architectural and structural details. Provide fittings, offsets, transformations and similar items required as a result of obstructions and other architectural and/or structural details but not shown on Drawings.

.8 Locations of equipment and materials shown may be altered, when reviewed by Consultant, to meet requirements of equipment and/or materials, other equipment or systems being installed, and of building, all at no additional cost to Contract.

.9 Specification does not generally indicate specific number of items or amounts of material required. Specification is intended to provide product data and installation requirements. Refer to schedules, Drawings (layouts, riser diagrams, schematics, details) and Specification to provide correct quantities. Singular may be read as plural and vice versa.

.10 Starter/motor control centre (MCC)/variable frequency drive (VFD) schedule drawings are both mechanical and electrical, and apply to work of Mechanical Divisions and Electrical Divisions. Be responsible for reviewing starter, MCC, VFD, and motor specification requirements of Mechanical Divisions specifications and drawings, prior to Bid submission. Confirm and coordinate exact scope of work and responsibility of work between Mechanical Divisions and Electrical Divisions.

.11 Drawings and Specifications are prepared solely for use by party with whom Consultant has entered into a contract and there are no representations of any kind made by Consultant to any other party.

.12 In case of discrepancies or conflicts between Drawings and Specifications, Documents will govern in order specified in "General Conditions", however, when scale and date of Drawings are same, or when discrepancy exists within Documents, include most costly arrangement.

## 1.05 METRIC AND IMPERIAL MEASUREMENTS

.1 Generally, both metric and imperial units of measurement are given in Sections of Specification governed by this section. Measurement conversions may be generally "soft" and rounded off. Exact measurements to be confirmed based on application. Where measurements are related to installation and onsite applications, confirm issued document measurements with applicable local code requirements, and/or as applicable, make accurate measurements onsite. Where significant discrepancies are found, immediately notify Consultant for direction.

## 1.06 EXAMINATION OF BID DOCUMENTS AND SITE

.1 Carefully examine Documents and visit site to determine and review existing site conditions that will or may affect work, and include for such conditions in Bid Price.

.2 Report to Consultant, prior to Bid Submittal, any existing site condition that will or may affect performance of work as per Documents. Failure to do so will not be grounds for additional costs.

.3 Upon finding discrepancies in, or omissions from Documents, or having doubt as to their meaning or intent, immediately notify Consultant, in writing.

## 1.07 WORK STANDARDS

.1 Where any code, regulation, bylaw, standard, contract form, manual, printed instruction, and installation and application instruction is quoted it means, unless otherwise specifically noted, latest published edition at time of submission of Bids adopted by and enforced by local governing authorities having jurisdiction. Include for compliance with revisions, bulletins, supplementary standards or amendments issued by local governing authorities.

.2 Where regulatory codes, standards and regulations are at variance with Drawings and Specification, more stringent requirement will apply unless otherwise directed by Owner and reviewed with Consultant.

.3 Supplementary mandatory Specifications and requirements to be used in conjunction with project include but are not limited to following:

.1 American Society of Heating, Refrigerating and Air Conditioning Engineers, Inc., (ASHRAE);

.2 American National Standards Institute (ANSI);

.3 ANSI/ASHRAE Standard 90.1, Energy Standard for Buildings Except Low-Rise Residential Buildings;

.4 Building Industry Consulting Services, International (BICSI);

.5 Canadian Standards Association (CSA);

.6 CSA C282, "Emergency Electrical Power Supply For Buildings";

.7 CSA Z32;

.8 CSA Z432, "Safeguarding of Machinery";

.9 CSA Z462, "Workplace Electrical Safety";

.10 Electrical and Electronic Manufacturers Association of Canada (EEMAC);

.11 Electrical Safety Authority (ESA);

.12 Electronic Industries Association (EIA);

.13 Illuminating Engineering Society (IES);

.14 Institute of Electrical and Electronic Engineers (IEEE);

.15 National Building Code of Canada (NBC);

.16 National Electrical Manufacturers Association (NEMA);

.17 National Fire Protection Association (NFPA);

.18 Occupational Health and Safety Act (OHSA);

.19 Occupational Health and Safety Act - Ontario Regulation 632, "Confined Spaces";

.20 Ontario Building Code (OBC);

.21 Ontario Electrical Safety Code (OESC);

.22 Technical Standards and Safety Authority (TSSA);

.23 Telecommunications Industry Association (TIA);

.24 Underwriters' Laboratories of Canada (ULC);

.25 Material Safety Data Sheets by product manufacturers;

.26 local utility inspection permits;

.27 codes, standards, and regulations of local governing authorities having jurisdiction;

.28 additional codes and standards listed in Trade Sections;

.29 Owner's standards.

.4 Provide applicable requirements for barrier free access in accordance with latest edition of local governing building code.

.5 Where any governing Code, Regulation, or Standard requires preparation and submission of special details or drawings for review they are to be prepared and submitted to appropriate authorities. Be responsible for costs associated with these submittals.

.6 Unless otherwise specified install, equipment in accordance with equipment manufacturer's recommendations and instructions, and requirements of governing Codes, Standards, and Regulations. Governing Codes, Standards, and Regulations take precedence over manufacturer's instructions. Notify Consultant in writing of conflicts between Contract Documents and manufacturer's instructions.

.7 Work is to be performed by journeyperson tradesmen who perform only work that their certificates permit, or by apprentice tradesmen under direct on site supervision of experienced journeyperson tradesman. Journeyperson to apprentice ratio is not to exceed ratio determined by the Board as stated in Ontario College of Trades and Apprenticeship Act or local equivalent governing body in Place of the Work.

.8 Journeyperson tradesmen are to have copy of valid trade certificates available at site for review by Consultant at any time.

.9 Maintain experienced and qualified superintendent on-site at times when work is being performed.

.10 Protect existing areas above, below and adjacent areas of Work from any debris, noise, or interruptions to existing services to satisfaction of Owner and reviewed with Consultant. Maintain in operation existing services to these areas to allow Owner to continue use of these areas. If services that are required to be maintained run through areas of renovations, provide necessary protection to services or reroute, in coordination with Owner and review with Consultant. Include for required premium time work to meet these requirements.

.11 Work being performed within occupied spaces and work affecting surfaces adjacent to occupied spaces may need to be performed after regular business hours. For areas where spaces are used by Owner on a 24 hours basis or over various hours, coordinate hours of work with Owner on a regular basis to suit Owner's schedule. Execute work at times confirmed with and agreed to by Owner and reviewed with Consultant, so as not to inconvenience Owner's occupation or in any way hinder Owner's use of building. Include for required premium timework to meet these requirements.

.12 Coordinate work inspection reviews and approvals with governing inspection department to ensure construction schedule is not delayed. Be responsible for prompt notification of deficiencies to Consultant and submission of reports and certificates to Consultant.

.13 Properly protect equipment and materials on site from damage and defacement due to elements and work of trades, to satisfaction of Owner and reviewed with Consultant. Equipment and materials are to be in new condition upon Substantial Performance of the Work.

## 1.08 HEALTHCARE FACILITY STANDARDS

.1 Comply with following CAN/CSA Standards:

.1 CAN/CSA Z317.13, Infection Control During Construction, Renovation, and Maintenance of Health Care Facilities;

.2 CAN/CSA Z317.10, Handling of Waste Materials in Health Care Facilities and Veterinary Health Care Facilities;

.3 CSA Z317.5, Illumination Systems in Health Care Facilities;

.4 CAN/CSA Z32, Electrical Safety and Essential Systems in Health Care Facilities;

.5 CSA Z8001, Commissioning of Health Care Facilities.

.2 Prepare list of areas of work where infection control procedures are to be in force and review list and procedures with healthcare facility's Infection Control Officer or a designated healthcare facility representative prior to commencing work in aforementioned areas. As work proceeds, ensure infection control procedures are being maintained.

.3 Comply with healthcare facility's latest policies and procedures regarding infection prevention and decontamination measures during work of project. Refer to additional requirements of Division 01.

## 1.09 PERMITS, CERTIFICATES, APPROVALS AND FEES

.1 Contact and confirm with local authorities having jurisdiction including utility providers, requirements for approvals from such authorities.

.2 Submit required applications, shop drawings, electrical distribution system protection device coordination studies, and short circuit calculations, and any other information requested by local authority.

.3 Provide ample notification to authorities having jurisdiction to perform required on-site inspection of work, allowing sufficient lead time to correct deficiencies in a manner that will not impede schedule of completion of Work. If any defect, deficiency or non-compliancy is found in work by inspection, be responsible for costs of such inspection, including any related expenses, making good and return to site, until work is passed by governing authorities.

.4 Obtain and submit to Consultant, approval/inspection certificates issued by governing authorities to confirm that Work as installed is in accordance with rules and regulations of local governing authorities and are acceptable by such authorities.

.5 Include in each copy of operating and maintenance instruction manuals, copies of approvals and inspection certificates issued by regulatory authorities.

.6 Where electromagnetic locks are provided whether by this Division or by others, be responsible for obtaining and paying for required certificates of work with regards to such electromagnetic lock work.

## 1.10 REQUIREMENTS FOR CONTRACTOR RETAINED ENGINEERS

.1 Professional engineers retained to perform consulting services with regard to Project work, i.e. seismic engineer, fire protection engineer or, structural engineer, are to be members in good standing with local Association of Professional Engineers, and are to carry and pay for errors and omissions professional liability insurance in compliance with requirements of governing authorities in Place of the Work.

.2 Retained engineer’s professional liability insurance is to protect Contractor's consultants and their respective servants, agents, and employees against any loss or damage resulting from professional services rendered by aforementioned consultants and their respective servants, agents, and employees in regards to the Work of this Contract.

.3 Unless otherwise specified in Division 00 and 01, liability insurance requirements are as follows:

.1 coverage is to be a minimum of $1,000,000.00 CDN inclusive of any one occurrence;

.2 insurance policy is not to be cancelled or changed in any way without insurer giving Owner minimum thirty days written notice;

.3 liability insurance is to be obtained from an insurer registered and licensed to underwrite such insurance in the Place of the Work;

.4 retained consultants are to ascertain that sub-consultants employed by them carry insurance in form and limits specified above;

.5 evidence of required liability insurance in such form as may be required is to be issued to Owner, Owner's Consultant, and Municipal Authorities as required prior to commencement of aforementioned consultant's services.

## 1.11 WORKPLACE SAFETY

.1 Comply with requirements of Workplace Hazardous Materials Information System (WHMIS) regarding use, handling, storage, and disposal of hazardous materials. Submit WHMIS MSDS (Material Safety Data Sheets) for products where required, and maintain one copy at site in a visible and accessible location available to personnel.

.2 Comply with requirements of Occupational Health and Safety Act and other regulations pertaining to health and safety, including worker's compensation/ insurance board and fall protection regulations. When working in confined spaces, comply with requirements of Occupational Health and Safety Act - Ontario Regulation 632, "Confined Spaces" and any other applicable Ministry of Labour requirements.

.3 If at any time during course of existing building work, hazardous materials other than those identified in Documents and pertaining to Project Scope of Work, are encountered or suspected that were not identified as being present and which specific instructions in handling of such materials were not given, cease work in area in question and immediately notify Consultant. Comply with local governing regulations with regards to working in areas suspected of containing hazardous materials. Do not resume work in affected area without approval from Owner and review with Consultant.

## 1.12 PLANNING AND LAYOUT OF WORK

.1 Base installation layout, design, terminations, and supply of accessories, on Contract Documents with specific coordination with reviewed shop drawings.

.2 Plan, coordinate, and establish exact locations and routing of services with affected trades prior to installation such that services clear each other as well as other obstructions. Generally, order of right of way for services to be as follows:

.1 piping requiring uniform pitch;

.2 piping 100 mm (4") dia. and larger;

.3 large ducts (main runs);

.4 cable tray and bus duct;

.5 conduit 100 mm (4") dia. and larger;

.6 piping less than 100 mm (4") dia.;

.7 smaller branch ductwork;

.8 conduit less than 100 mm (4") dia..

.3 As reviewed with Consultant, Mechanical Contractor is to generally determine final locations of major work within ceiling spaces.

.4 Unless otherwise shown or specified, conceal work in finished areas, and conceal work in partially finished and/or unfinished areas to extent made possible by the area construction. Install services as high as possible to conserve headroom and/or ceiling space. Notify Consultant where headroom or ceiling space appears to be inadequate prior to installation of work.

.5 Do not use Contract Drawing measurements for prefabrication and layout of raceways, conduits, ducts, bus ducts, luminaires, and other such work. Locations and routing are to be generally in accordance with Contract Drawings, however, prepare layout drawings for such work. Use established bench marks for both horizontal and vertical measurements. Confirm inverts, coordinate with and make allowances for work of other trades. Accurately layout work, and be entirely responsible for work installed in accordance with layout drawings. Where any invert, grade, or size is at variance with Contract Drawings, notify Consultant prior to proceeding with work.

.6 Prepare plan and interference drawings (at a minimum drawing scale of 1:50 or ¼"=1' 0") of work for coordination with each trade Contractor. Arrange for preparation of detailed section drawings of ceiling spaces of corridors and any other congested areas. Sections are to be cross referenced with plan drawings so that trades may make use of section drawings. Section drawings to indicate lateral and elevation dimensions of major services within ceiling space. Lateral dimensions are to be from grid lines and elevations from top of floor slab. Obtain from Consultant, engineering drawings for this use. Contractors' interference drawings are to be distributed among other Trade Contractors. Submit drawings to Consultant for review. Failure of General Contractor to prepare and coordinate overall interface drawings of trades does not relieve respective Division Contractor of responsibility to ensure that work is properly planned and coordinated.

.7 Carry out alterations in arrangement of work that has been installed without proper coordination, study, and review, even if in accordance with Contract Documents, in order to conceal work behind finishes, or to allow installation of other work, without additional cost. In addition, make necessary alterations in other work required by such alterations, without additional cost.

.8 Control products, products requiring maintenance, junction boxes, and similar products, particularly such products located above suspended ceilings must be located for easy access for servicing and/or removal. Products which do not meet this location requirement are to be relocated to an accessible location at no additional cost.

.9 Be responsible for making necessary changes, at no additional cost, to accommodate structural and building conditions that were missed due to lack of coordination.

.10 Where drawings indicate that acoustic tile ceiling is being suspended below plaster ceiling, coordinate design of framework used to support suspended ceiling, lighting, diffusers, and other Divisions components that are mounted within or through ceiling. Do not mount devices to suspended ceiling. Secure and mount to ceiling slab above. Seal ceiling openings to maintain required fire rating.

## 1.13 COORDINATION OF WORK

.1 Review Contract Documents and coordinate work with work of each trade. Coordination requirements are to include, but not be limited to following:

.1 requirements for openings, sleeves, inserts and other hardware necessary for installation of work;

.2 concrete work such as housekeeping pads, sumps, bases, etc., required for work, and including required dimensions, operating weight of equipment, location, etc.;

.3 depth and routing of excavation required for work, and requirements for bedding and backfill;

.4 wiring work required for equipment and systems but not specified to be done as part of mechanical work, including termination points, wiring type and size, and any other requirements.

.2 Ensure materials and equipment are delivered to site at proper time and in such assemblies and sizes so as to enter into building and be moved into spaces where they are to be located without difficulty.

.3 Wherever possible, coordinate equipment deliveries with manufacturers and/or suppliers so equipment is delivered to site when it is required, or so it can be stored within building subject to available space as confirmed with Owner and reviewed with Consultant and protected from elements.

.4 Ensure proper access and service clearances are maintained around equipment, and, where applicable, access space for future equipment removal or replacement is not impeded. Comply with code requirements with regards to access space provision around equipment. Remove and replace any equipment which does not meet this requirement.

.5 Where work is to be integrated, or is to be installed in close proximity with work of other trades, coordinate work prior to and during installation.

## 1.14 COMPONENT FINAL LOCATIONS

.1 Owner and Consultant reserve right to relocate electrical components such as receptacles, switches, communication system, outlets, hard wired outlet boxes and luminaries at a later date, but prior to installation, without additional cost to Owner, if relocation per components do not exceed 3 m (10') from original location. No credits will be anticipated where relocation per components of up to and including 3 m (10') reduces materials, products and labour. Should relocations exceed 3 m (10') from original location, adjust contract price for that portion beyond 3 m (10') in accordance with provisions for changes in Contract Documents.

## 1.15 SYSTEMS COORDINATION

.1 Be responsible for and perform specific coordination of various low voltage systems supplied by Electrical Divisions and also with systems supplied by other Divisions of Work. Include for but not be limited to provision of following, as applicable:

.1 coordinate with General Contractor and other Subcontractors, various systems of trades which in any way are interfaced with or monitored by or integrated to, or need to be coordinated with;

.2 prepare systems coordination drawings detailing related system coordination and integration points being monitored and/or controlled; submit coordination drawings as part of shop drawing submission;

.3 coordinate security system requirements with successful door hardware supplier and prepare detailed coordination drawings of component installations, wiring and conduit layouts, division of responsibility between various trades, etc.; review security system requirements with associated door hardware (electromagnetic locks, electric strikes, etc.), to ensure proper sequence of operation and door functionality is provided to suit each door configuration; prepare detailed door functionality of each door configuration and submit to and review with Consultant;

.4 review systems requirements for component back boxes and conduits; ensure that system of conduits and boxes meet respective system wiring bending radii requirements;

.5 review specifications of each trade/Division ( i.e. for BAS points, elevator requirements, electrical devices in millwork or prefabricated service consoles, outlet box and back box requirements), to ensure proper power supplies, interconnecting wiring requirements and back box/ outlet box requirements;

.6 review with manufacturers coordination and integration requirements of their systems;

.7 review each systems communication protocols to ensure they are compatible and can communicate with each other as required;

.8 review system shop drawings prior to submission to Consultant, to verify that each system has been coordinated with other systems and that required options and features are selected to meet coordination requirements;

.9 be present at testing and commissioning functions of each system and provide technical assistance with regards to system operations;

.10 be "on-site" coordinator of respective system trades with regards to respective system coordination of installation and testing;

.11 coordinate with various trades and equipment vendors and review with Consultant with regards to ensuring that systems coordinate and integrate properly to meet intent of design and Owner requirements;

.12 document coordination and integration requirements and maintain records for submission as part of shop drawings;

.13 respond to coordination and integration requirements and be responsible for such work;

.14 where a system integrator has been included for, coordinate integration requirements with system integrator.

## 1.16 PRODUCTS

.1 Be responsible for ordering of products (equipment and materials) in a timely manner in order to meet project-scheduling timelines. Failure to order products to allow manufacturers sufficient production/delivery time to meet project-scheduling timelines is an unacceptable reason to request for other suppliers or substitutions.

.2 Provide Canadian manufactured products wherever possible or required and when quality and performance is obtainable at a competitive price. Products are to be supplied from manufacturer's authorized Canadian representative, unless otherwise noted. Unless otherwise specified, products are to be new and are to comply with applicable respective Canadian standards. References to UL listings of products to include requirements that products are to be also Underwriters Laboratories of Canada (ULC) listed for use in Canada. Products are to meet or exceed latest ANSI/ASHRAE/IES 90.1 standards, as applicable. Do not supply any products containing asbestos materials or PCB materials.

.3 Systems and equipment of this Project are to be "State of the Art" and be most recent and up to date series/version of product that is available at time of shop drawing review process. Products that have been stored or "on shelf" for an extended period of time will not be accepted. Software is to be of latest version available and be provided with updates available at time of shop drawing review process. Systems are to be designed such that its software is backwards compatible. Future upgrades are not to require any hardware replacements or additions to utilize latest software.

.4 Products scheduled and/or specified have been selected to establish a performance and quality standard, and, in some instances, a dimensional standard. In most cases, base specified manufacturers are stated for any product specified by manufacturer's name and model number. Where acceptable manufacturers are listed, first name listed is base specified company. Bid Price may be based on products supplied by any of manufacturers' base specified or named as acceptable for particular product. If acceptable manufacturers are not stated for a particular product, base Bid Price on product supplied by base specified manufacturer.

.5 Documents have been prepared based on product available at time of Bidding. If, after award of Contract, and if successful manufacturer can no longer supply a product that meets base specifications, notify Consultant immediately. Be responsible for obtaining other manufacturers product that complies with base specified performance and criteria and meets project timelines. Proposed products are subject to review and consideration by Consultant and are considered as substitutions subject to a credit to Contract. In addition, if such products require modifications to room spaces, mechanical systems, electrical systems, etc., include required changes. Such changes are to be submitted in detail to Consultant for review and consideration for acceptance. There will be no increase in Contract Price for revisions. Above conditions supplement and are not to supersede any specification conditions in Division 01 with regards to substitutions or failure to supply product

.6 Listing of a product as "acceptable" does not imply automatic acceptance by Consultant and/or Owner. It is responsibility of Contractor to ensure that any price quotations received and submittals made are for products that meet or exceed specifications included herein.

.7 If products supplied by a manufacturer named as acceptable are used in lieu of base specified manufacturer, be responsible for ensuring that they are equivalent in performance and operating characteristics (including energy consumption if applicable) to base specified products. It is understood that any additional costs (i.e. for larger starters, larger feeders, additional spaces, etc.), and changes to associated or adjacent work resulting from provision of product supplied by a manufacturer other than base specified manufacturer, is included in Bid Price. In addition, in equipment spaces where equipment named as acceptable is used in lieu of base specified equipment and dimensions of such equipment differs from base specified equipment, prepare and submit for review accurately dimensioned layouts of rooms affected, identifying architectural and structural elements, systems and equipment to prove that equipment in room will fit properly meeting design intent. There will be no increase in Contract Price for revisions.

.8 In addition to manufacturer's products base specified or named as acceptable, other manufacturers of products may be proposed as substitutions to Consultant for review and consideration for acceptance, listing in each case a corresponding credit for each substitution proposed. However, base Bid Price on products base specified or named as acceptable. Certify in writing to Consultant that proposed substitution meets space, power, design, energy consumption, and other requirements of base specified or acceptable product. It is understood that there will be no increase in Contract Price by reason of any changes to associated equipment, mechanically, electrically, structurally or architecturally, required by acceptance of proposed substitution. Consultant has sole discretion in accepting any such proposed substitution of product. Indicate any proposed substitutions in areas provided on Bid Form. Do not order such products until they are accepted in writing by Consultant.

.9 When requested by Consultant, identify names of manufacturers for proposed products to be supplied, and which were based specified or scheduled with a manufacturer's name. Names of proposed manufacturers on list must be one of names stated as acceptable for particular products, unless prior approval from Owner has been given for use of products by other manufacturers. Submit to Consultant for review as directed.

.10 Where products are listed as "or approved equal", certify in writing that product to be used in lieu of base specified product, at least meets space, power, design, energy consumption, and other requirements of base specified product and is equivalent or better than base specified product. When requested by Consultant, provide full design detail drawings and specifications of proposed products. Acceptance of these "or approved equal" products is at sole discretion of Consultant. It is understood that there will be no increase in Contract Price by reason of any changes to associated equipment, mechanically, electrically, structurally or architecturally, required by acceptance of approved equal product. There must be no increase in Contract price due to Consultant's rejection of proposed equivalent product.

.11 Whenever use of product other than base specified product is being supplied, ensure corresponding certifications and product information (detailed catalogue and engineering data, fabrication information and performance characteristics) are submitted to Consultant for review. Failure of submission of these documents to Consultant in a timely manner to allow for review will result in base specified product to be supplied at Consultant's discretion, at no additional cost to Contract.

.12 Products supplied by a manufacturer/supplier other than a manufacturer listed as acceptable may be considered for acceptance by Consultant if requested in writing with full product documentation submitted, a minimum of 10 working days prior to Bid closing date.

.13 Any proposed changes initiated by Contractor after award of Contract may be considered by Consultant at Consultant's discretion, with any additional costs for such changes if accepted by Owner and reviewed with Consultant, and costs for review, to be borne by Contractor.

.14 Whenever use of product other than based specified products or named as acceptable is being supplied, allow sufficient time for processing of product submissions and time for Consultant's review , such that there will not be significant impact on contract time or work schedule.

.15 Requirements for low voltage systems of this project that are of technology that changes rapidly and are forever evolving and changing, resulting in systems that may be out dated by time of installation, are to include provisions to allow Owner option to select most updated technology. Shop drawings for such systems and equipment are to include provisions for a minimum 6-week review time for Owner to review degree of technology of each system and determine acceptance. Owner will have right to substitute a more advanced technology subject to negotiated pricing.

## 1.17 NON-FERROUS MATERIALS

.1 Materials within designated imagining rooms to be of non-ferrous construction as reviewed with Consultant. Devices, luminaires, various communications system components, etc., utilized to be approved for use in designated imaging room type applications. Methods of construction to take into consideration use of non-ferrous materials. Ultimate approval of any materials, devices or components, or methods of construction to be at imaging system manufacturer's discretion. Coordinate and confirm final requirements with successful imaging system supplier.

## 1.18 SHOP DRAWINGS

.1 At start-up meeting review with Consultant, products to be included in shop drawing submission. Prepare and submit list of products to Consultant for review.

.2 Submit electronic copies of shop drawings unless otherwise directed by Owner or reviewed with Consultant. Review exact requirements with Consultant.

.3 Submit for review, drawings showing in detail design, construction, and performance of equipment and materials as requested in Specification. Submit shop drawings to Consultant for review prior to ordering and delivery of product to site. Include minimally for preparation and submission of following, as applicable:

.1 product literature cuts;

.2 equipment data sheets;

.3 equipment dimension drawings;

.4 system block diagrams;

.5 sequence of operation;

.6 connection wiring schematic diagrams;

.7 functionality with integrated systems.

.4 Each shop drawing or product data sheet is to be properly identified with project name and product drawing or specification reference. Shop drawing or product data sheet dimensions are to match dimension type on drawings.

.5 Where any item of equipment is required by Code or Standard or By-Law to meet a specific energy efficiency level, or any other specific requirement, ensure this requirement is clearly indicated on submission.

.6 Ensure proposed products meet each requirement of Project. Endorse each shop drawing copy "CERTIFIED TO BE IN ACCORDANCE WITH ALL REQUIREMENTS". Include company name, submittal date, and sign each copy. Shop drawings that are received and are not endorsed, dated and signed will be returned to be resubmitted.

.7 Consultant to review shop drawings and indicate review status by stamping shop drawing copies as follows:

.1 "REVIEWED" or "REVIEWED AS NOTED" (appropriately marked) – If Consultant's review of shop drawing is final, Consultant to stamp shop drawing;

.2 "REVISE AND RESUBMIT" – If Consultant's review of shop drawing is not final, Consultant to stamp shop drawing as stated above, mark submission with comments, and return submission. Revise shop drawing in accordance with Consultant's notations and resubmit.

.8 Following is to be read in conjunction with wording on Consultant's shop drawing review stamp applied to each and every shop drawing submitted:

"THIS REVIEW BY CONSULTANT IS FOR SOLE PURPOSE OF ASCERTAINING CONFORMANCE WITH GENERAL DESIGN CONCEPT. THIS REVIEW DOES NOT MEAN THAT CONSULTANT APPROVES DETAILED DESIGN INHERENT IN SHOP DRAWINGS, RESPONSIBILITY FOR WHICH REMAINS WITH CONTRACTOR. CONSULTANT'S REVIEW DOES NOT RELIEVE CONTRACTOR OF RESPONSIBILITY FOR ERRORS OR OMISSIONS IN SHOP DRAWINGS OR OF CONTRACTOR'S RESPONSIBILITY FOR MEETING REQUIREMENTS OF CONTRACT DOCUMENTS. BE RESPONSIBLE FOR DIMENSIONS TO BE CONFIRMED AND CORRELATED AT JOB SITE, FOR INFORMATION THAT PERTAINS SOLELY TO FABRICATION PROCESSES OR TO TECHNIQUES OF CONSTRUCTION AND INSTALLATION, AND FOR CO-ORDINATION OF WORK OF SUB-TRADES."

.9 Submit each system and each major component as separate shop drawing submissions. Submit together, shop drawings for common devices such as devices of each system.

.10 Obtain shop drawings for submission from product manufacturer's authorized representatives and supplemented with additional items specified herein.

.11 Do not order product until respective shop drawing review process has been properly reviewed with Consultant.

.12 Where extended warranties are specified for equipment items, submit specified extended warranty with shop drawing submittal.

.13 Refer to specific requirements in other Sections.

## 1.19 ENGINEERED SUBMITTALS

.1 Submittals for items required to be sealed by a professional engineer (engineered) are to be duly prepared, sealed, and signed under direct control and supervision of a qualified professional engineer licensed in jurisdiction of the work. Professional engineer is to conform to requirements specified in this Section in article entitled Requirements for Contractor Retained Engineers.

.2 Engineered submittals are to include, but not be limited to, following:

.1 complete CAD layout drawings indicating equipment, wiring schematic, conduit routing and sizing, zones, devices, and any other pertinent data;

.2 listing of design data used to determine system layout and sizing;

.3 complete copies of design calculations and listing of design data used in preparing calculations;

.4 list detailing standards, codes, regulations, etc. adhered to when designing system;

.5 items as noted in other Sections of the Specification.

.3 Professional engineer responsible for engineered submittals is to perform periodic field reviews, including review of associated mock-ups where applicable, at locations wherever work as described by engineered submittal is in progress, during fabrication and installation of such work, and submit a field review report after each visit. Submit field review reports to Consultant and authorities having jurisdiction as required.

.4 Field reviews are to be at intervals as necessary and appropriate to progress of work described by engineered submittal to allow engineer to be familiar with progress and quality of such work and to determine if work is proceeding in general conformity with Contract Documents including reviewed shop drawings and design calculations.

.5 Upon completion of work as described by engineered submittal, professional engineer responsible for preparation of engineered submittal and for performing periodic field reviews is to prepare and submit to Consultant and, if applicable, authorities having jurisdiction, a letter certifying that work has been supplied and installed in accordance with requirements of Contract Documents, authorities having jurisdiction and engineered submittal.

## 1.20 EQUIPMENT LOADS

.1 Supply equipment loads (self-weight, operating weight, housekeeping pad, inertia pads, etc.) to Consultant, via shop drawing submissions, prior to construction.

.2 Where given choice of specific equipment, actual weight, location and method of support of equipment may differ from those assumed by Consultant for base

design. Back-check equipment loads, location, and supports, and include necessary accommodations.

.3 Where supporting structure consists of structural steel framing, it is imperative that equipment loads, location, and method of support be confirmed prior to fabrication of structural steel. Review locations of equipment with Consultant prior to construction.

## 1.21 OPENINGS

.1 Supply opening sizes and locations to Consultant to allow verification of their effect on design, and for inclusion on structural drawings where appropriate.

.2 No openings are permitted through completed structure without written approval from Owner and review with Consultant. Show required openings on a copy of structural drawings. Identify exact locations, elevations, and size of proposed openings and submit to Consultant for review, well in advance of doing work.

.3 Prior to leaving site at end of each day, walk through areas of work and check for any openings, penetrations, holes, and/or voids created under scope of work of project, and ensure that any openings created under scope of work have been closed off, fire-stopped and smoke-sealed. Unless otherwise directed by Owner and reviewed with Consultant, do not leave any openings unprotected and unfinished overnight.

## 1.22 SCAFFOLDING, HOISTING, AND RIGGING,

.1 Unless otherwise specified or directed, supply, erect and operate scaffolding, rigging, hoisting equipment and associated hardware required for work, and subject to approval from Owner and review with Consultant.

.2 Use scaffolds in such a manner as to interfere as little as possible with work of other trades.

.3 Do not place major scaffolding/hoisting equipment loads on any portion of structure without approval from Owner and review with Consultant. No supports, clips, brackets or similar devices are to be welded, bolted or otherwise affixed to any finished member or surface without approval from Owner and review with Consultant.

.4 Immediately remove from site scaffolding, rigging and hoisting equipment when no longer required.

## 1.23 CHANGES IN THE WORK

.1 Whenever Consultant proposes in writing to make a change or revision to design, arrangement, quantity, or type of any work from that required by Contract Documents, prepare and submit to Consultant for review, a quotation detailing proposed cost for executing change or revision.

.2 Quotation to be a detailed and itemized estimate of product, labour, and equipment costs associated with change or revision, plus overhead and profit percentages and applicable taxes and duties.

.3 If overhead and profit percentages are not specified in Division 00 or 01, but allowable under Contract as reviewed with Consultant prior to contract signing,

then allowable maximum percentages for overhead and profit are to be 7% and 5% respectively.

.4 Unless otherwise specified in Divisions 00 or 01, following additional requirements apply to quotations submitted:

.1 when change or revision involves deleted work as well as additional work, cost of deleted work (less overhead and profit percentages but including taxes and duties) is to be subtracted from cost of additional work before overhead and profit percentages are applied to additional work;

.2 material costs are not to exceed those published in local estimating price guides;

.3 electrical material labour unit costs are to be in accordance with National Electrical Contractors Association Manual of Labor Units at difficult level, less 25%;

.4 mechanical material labour unit costs are to be in accordance with Mechanical Contractors Association of America Labor Estimating Manual, less 25%;

.5 costs for journeyperson and apprentice labour must not exceed prevailing rates at time of execution of Contract and must reflect actual personnel performing work;

.6 cost for site superintendent must not exceed 10% of total hours of labour estimated for change or revision, and change or revision must be such that site superintendent's involvement is necessary;

.7 costs for rental tools and/or equipment are not to exceed local rental costs;

.8 overhead percentage will be deemed to cover quotation costs other than actual site labour and materials, and rentals;

.9 quotations, including those for deleted work, to include a figure for any required change to Contract time.

.5 Quotations submitted that are not in accordance with requirements specified above will be rejected and returned for re-submittal. Failure to submit a proper quotation to enable Consultant to expeditiously process quotation and issue a Change Order will not be grounds for any additional change to Contract time.

.6 Make requests for changes or revisions to work in writing to Consultant and, if accepted by Owner, Notice of Change to be issued.

.7 Do not execute any change or revision until written authorization for change or revision has been obtained from Owner and reviewed with Consultant.

## 1.24 PROGRESS PAYMENT BREAKDOWN

.1 Prior to submittal of first progress payment draw, submit a detailed breakdown of work cost to assist Consultant in reviewing and approving progress payment claims.

.2 Payment breakdown is subject to Owner's approval and Consultant's review. Progress payments will not be processed until an approved breakdown is in place. Breakdown is to include one-time claim items such as mobilization and demobilization, insurance, bonds (if applicable), shop drawings and product data sheets, commissioning including system testing and verification, and project closeout submittals.

.3 Indicate equipment, material and labour costs for site services (if applicable) and indicate work of each trade in same manner as they will be indicated on progress draw.

## 1.25 NOTICE FOR REQUIRED FIELD REVIEWS

.1 Whenever there is a requirement for Consultant to perform a field review prior to concealment of any work, to inspect/re-inspect work for deficiencies prior to Substantial Performance of the Work, for commissioning demonstrations, and any other such field review, give minimum 5 working days' notice in writing to Consultant.

.2 If Consultant is unable to attend a field review when requested, arrange an alternative date and time.

.3 Do not conceal work until Consultant advises that it may be concealed.

.4 When Consultant is requested to perform a field review and work is not ready to be reviewed, reimburse Consultant for time and travel expenses.

## 1.26 PRELIMINARY TESTING

.1 When directed by Consultant, promptly arrange, pay for, and perform site tests on any piece of equipment or any system for such reasonable lengths of time and at such times as may be required to prove compliance with Specification and governing Codes and Regulations, prior to Substantial Performance of the Work.

.2 When, in Consultant's opinion, tests are required to be performed by a certified testing laboratory, arrange and pay for such tests.

.3 These tests are not to be construed as evidence of acceptance of work, and it is agreed and understood that no claim for delays or damage will be made for injury or breakage to any part or parts of equipment or system due to test where such injuries or breakage were caused by faulty parts and/or workmanship of any kind.

.4 When, in Consultant's opinion, tests indicate that equipment, products, etc., are defective or deficient, immediately remove such equipment and/or products from site and replace them with acceptable equipment and/or products, at no additional cost.

## 1.27 PROVISIONS FOR SYSTEMS/EQUIPMENT USED DURING CONSTRUCTION

.1 Any system or piece of equipment that is specified to be provided under requirements of Documents and is required to be used during construction stages of work prior to issuing of Certificate of Substantial Performance of the Work, are to be provided with special interim maintenance and service to cover systems/equipment during time of use during construction period of project until project has been certified as substantially performed and such systems/equipment are turned over to Owner.

.2 During this period of construction, such systems/equipment to not become property of Owner or be Owner's responsibility for maintenance or service. Systems/equipment are to remain property of respective manufacturers/suppliers or Contractor, who are responsible for full maintenance and servicing of systems/equipment in order to maintain validity of warranties after turn over to Owner.

.3 Prior to application for a Certificate of Substantial Performance of the Work and turn over to Owner, such systems/equipment to be cleaned, restored to "new" condition, paint finishes "touched-up", filters cleaned or replaced, etc.

## 1.28 TEMPORARY SERVICES

.1 Coordinate with Prime Contractor, requirements for temporary services including but not limited to temporary electrical power, lighting, heating, fire alarm and exit pathways. Locations of exit pathways to be as decided at discretion of Prime Contractor and to be illuminated complete with emergency lighting, and provided with exit signage and fire alarm devices. Unless otherwise noted, provide required services in accordance with requirements of local governing building code and local governing inspection authorities.

.2 Maintain fire protection of areas which may include fire watch during temporary shutdowns of existing systems, in accordance with requirements of local governing code and local governing authorities.

.3 Protect existing fire alarm devices within the room and provide temporary fire detection as required during construction. Include for all devices, wiring, conduit, testing and verification.

## 1.29 CLEANING

.1 During construction, keep site reasonably clear of rubbish and waste material resulting from work on a daily basis to the satisfaction of Owner and Consultant. Before applying for a Certificate of Substantial Performance of the Work, remove rubbish and debris, and be responsible for repair of any damage caused as a result of work.

.2 At time of final cleaning, clean luminaire reflectors, lenses, and other luminary surfaces that have been exposed to construction dust and dirt, including top surface, whether it is exposed or in ceiling space.

.3 Clean switches, receptacles, communications outlets, coverplates, and exposed surfaces.

.4 Clean other electrical equipment and devices installed as part of this project.

.5 For work performed in electrical equipment rooms, electrical closets and communication closets, perform following:

.1 HEPA vacuum and clean interiors and buswork of switchboards, panels, cabinets and other electrical equipment of construction debris and dust prior to energization;

.2 HEPA vacuum top of switchboards, panels, cabinets, bus ducts, cable trays and conduits in room, followed by a thorough HEPA vacuuming of floors;

.3 do not lay permanent switchboard matting in electrical rooms until rooms are re-cleaned, and floors wet mopped and dried just prior to final turn over to Owner.

## 1.30 RECORD AS-BUILT DRAWINGS

.1 Drawings for this project have been prepared on a CAD system using AutoCAD software of release version reviewed with Consultant. For purpose of producing record "as built" drawings, copies of Contract Drawings can be obtained from Consultant, at expense of $25.00 CDN plus HST, per drawing, up to first 10 drawings, and $5.00 CDN plus HST, per any additional drawings thereafter. Drawings may also to be used for preparation of layouts and interference drawings.

.2 As work progresses at site, clearly mark in red in a neat and legible manner on a set of bound white prints of Contract Drawings, changes and deviations from routing of services and locations of equipment shown on Contract Drawings, on a daily basis. Changes and deviations include those made by addenda, change orders, and site instructions. Use notes marked in red as required. Maintain white print red line as-built set at site for exclusive use of recording as-built conditions, keep set up-to-date, and ensure set is available for periodic review. As-built set is also to include following:

.1 dimensioned location of inaccessible concealed work;

.2 locations of control devices with identification for each;

.3 location and identification of devices in concealed locations such as accessible ceiling spaces and raised floors;

.4 for underground piping and ducts, record dimensions, invert elevations, offsets, fittings, cathodic protection and accessories if applicable, and locate dimensions from benchmarks to be preserved after construction is complete;

.5 location of concealed services terminated for future extension and work concealed within building in inaccessible locations.

.6 location of fire alarm devices and include addresses of devices; identify fire alarm zones;

.7 identify routing and location of concealed conduits/ducts of diameter 50 mm (2") and greater;

.3 Before applying for a Certificate of Substantial Performance of the Work, update a clean copy of Contract Drawing set in accordance with marked up set of "as-built" white prints including deviations from original Contract Drawings, thus forming an "as-built" drawing set. Submit "as-built" site drawing prints to Consultant for review. Make necessary revisions to drawings as per Consultant’s comments, to satisfaction of Consultant.

.4 Use final reviewed "as-built" drawing set to provide CAD files of drawings thus forming true "as-built" set of Contract Drawings. Identify set as "Project Record Copy". Load digital copies of final reviewed by Consultant as-built drawings onto USB type flash drive. Provide 2 complete sets of "as-built" drawings on separate USBs. Submit "as-built" sets of white prints and USBs to Consultant.

.5 Submitted drawings are to be of same quality as original Contract Drawings. CAD drawing files are to be compatible with AutoCAD software release version confirmed with Consultant.

.6 Unless otherwise noted in Divisions 00 or 01, failure to maintain accurate record drawings will incur additional 5% holdback on progress claims until drawings are brought up to date to satisfaction of Owner and reviewed with Consultant.

.7 Prepare and submit for review with record drawings, a neat, clear, properly identified, "as-built" electrical distribution riser diagram record drawing (in AutoCAD format release version confirmed with Consultant) of entire electrical distribution system up to and including line side connections to panelboards. Building and room outlines are to reflect "as-built" outlines. Include in diagrams for feeder types and sizes, conduit sizes, breaker, switchboard and distribution panel sizes, etc. Submit sample version to Consultant for review and comments prior to final manufacturer. Size diagrams same size as issued full Size Drawings. Mount riser diagrams on 10 mm (3/8") thick foam core complete with mylar finish cover, and hardware suitable for wall mounting in main electrical room.

.8 Include on single lines, panelboard locations identified by room numbers below panel. When specific identified location is not available, nearest available room number to be used followed by a (∆) triangle to flag approximate location. Encircle various loads by Building Wings (where applicable) for ease of identification. Group lighting loads on panelboards on top of panel. Identify motor control centres and splitters similar to panelboards. Identify fuse sizing including existing equipment where there is no difficulty in obtaining information. Use these requirements for pricing, and review exact requirements with Consultant prior to commencing work.

.9 Replace existing posted single line electrical distribution drawings with revised to reflect renovations and revisions to electrical distribution equipment. Drawings to be of type to match existing as confirmed with Owner. Supply electronic files of format confirmed with Owner and reviewed with Consultant for following:

.1 fire alarm system test report devices and addresses;

.2 network cabling system test report devices and labelling of each device and cable.

## 1.31 OPERATING AND MAINTENANCE MANUALS

.1 For each item of equipment for which a shop drawing is required (except for simple equipment), supply minimum 3, project specific, indexed copies of equipment manufacturers' operating and maintenance (O&M) instruction data manuals. Review exact quantity of manuals with Consultant. Consolidate each copy of data in an identified hard cover three "D" ring binder. Each binder to include:

.1 front cover: project name label; wording – "Electrical Systems Operating and Maintenance Manual"; and date;

.2 introduction sheet listing Consultant, Contractor, and Subcontractor names, street addresses, telephone and fax numbers, and e-mail addresses;

.3 equipment manufacturer's authorized contact person name, telephone number and company website;

.4 Table of Contents sheet, and corresponding index tab sheets;

.5 copy of each "REVIEWED" or clean, updated "REVIEWED AS NOTED" shop drawing or product data sheet, with manufacturer's/supplier's name, telephone and fax numbers, email address, company website address, and email address for local source of parts and service; when shop drawings are returned marked "REVIEWED AS NOTED" with revisions marked on shop drawing copies, they are to be revised by equipment supplier to incorporate comments marked on "reviewed" shop drawings and a clean updated copy is to be included in operating and maintenance manuals;

.6 maintenance data as follows:

.1 operation and trouble-shooting instructions for each item of equipment and each system;

.2 schedules of tasks, frequency, tools required, and estimated task time;

.3 recommended maintenance practices and precautions including warnings of any maintenance practice that will damage or disfigure equipment/systems;

.4 complete parts lists with numbers.

.7 performance data as follows:

.1 equipment and system start-up data sheets;

.2 equipment test reports;

.3 final verification and commissioning reports.

.8 explanation of operating principles and sequences;

.9 inspection certificates issued by regulatory authorities;

.10 wiring and connection diagrams;

.11 copies of additional and revised panelboard directories;

.12 warranties;

.13 items requested specifically in Section Articles.

.2 Generally, binders are not to exceed 75 mm (3") thick and not to be more than 2/3 full.

.3 Operating and maintenance instructions are to relate to job specific equipment supplied under this project and related to Owner’s building. Language used in manuals is to contain simple practical operating terms and language easy for in-house maintenance staff to understand how to operate and maintain each system.

.4 Before applying for a Certificate of Substantial Performance of the Work, assemble one draft copy of O & M Manual and submit to Consultant for review prior to assembling remaining copies. Incorporate Consultant’s comments into final submission.

.5 Provide 2 digital copies of contents of operating and maintenance manuals and load onto separate USB type flash drives and submit to Consultant. Prepare digital copies using version of Adobe Acrobat Portable Document Format or equal as reviewed with Consultant and enhanced with bookmarks and internal document links.

## 1.32 COMMISSIONING

.1 Commissioning Agent is appointed by Owner to oversee commissioning activities of contract.

.2 Interface, cooperate and coordinate with Commissioning Agent and attend commissioning meetings. Perform commissioning activities for aspects of work provided in Electrical Divisions and perform corrective work identified by Commissioning Agent.

.3 Submit copies of submittals such as O&M manuals, shop drawings, schedules and test reports of systems and equipment to Commissioning Agent, prior to start of commissioning activity or as directed by Commissioning Agent.

.4 Commissioning Agent may also be present for any testing/commissioning activities. Notify Commissioning Agent in advance of these activities.

## 1.33 WARRANTY

.1 Unless otherwise specified in Divisions 00 and 01, warrant work to be in accordance with Contract Documents and free from defects for a period of 1 year from date of issue of a Certificate of Substantial Performance of the Work.

.2 Where equipment includes extended warranty period, e.g., 5 years, first year of warranty period is to be governed by terms and conditions of warranty in Contract Documents, and remaining years of warranty are to be direct from equipment manufacturer and/or supplier to Owner. Submit signed and dated copies of extended warranties to Consultant.

.3 Warranty to include parts, labour, travel costs and living expenses incurred by manufacturer’s authorized technician to provide factory authorized on-site service.

.4 Repair and/or replace any defects that appear in Work within warranty period without additional expense to Owner. Be responsible for costs incurred in making defective work good, including repair or replacement of building finishes, other materials, and damage to other equipment. Ordinary wear and tear and damage caused wilfully or due to carelessness of Owner’s staff or agents is exempted.

.5 Do not include Owner deductible amounts in warranties.

.6 Visit building during warranty period with Owner representatives. Owner to organize these visits. At these meetings, Owner representatives are to review performance of systems. If performance is satisfactory, then no further action needs to be taken. If unsatisfactory, then correct deficiencies, as directed by Owner representatives, to satisfaction of Owner representatives. These site visits to occur:

.1 once during first month of building operation;

.2 once during third month of building operation;

.3 once between fourth and tenth month in a season opposite to first and third month visits.

## 1.34 PROJECT CLOSE OUT SUBMITTALS

.1 Prior to application for Substantial Performance of the Work, submit required items and documentation specified, including following:

.1 Operating and Maintenance Manuals;

.2 as-built record drawings and associated data;

.3 extended warranties for equipment as specified;

.4 operating test certificates;

.5 final commissioning report;

.6 identified keys for equipment and/or panels for which keys are required, and other items required to be submitted;

.7 other data or products specified.

## 1.35 INSTRUCTIONS TO OWNER

.1 Refer to equipment and system operational and maintenance training requirements specified in Division 01.

.2 Train Owner's designated personnel in aspects of operation and maintenance of equipment and systems as specified. Demonstrations and training are to be performed by qualified technicians employed by equipment/system manufacturer/supplier. Supply hard copies of training materials to each attendee.

.3 Unless where specified otherwise in trade Sections, minimum requirements are for manufacturer/suppliers of each system and major equipment, to provide minimum two separate sessions each consisting of minimum 4 hours on site or in factory training (at Owner's choice), of Owner's designated personnel (for up to 6 people each session), on operation and maintenance procedures of system.

.4 For each item of equipment and for each system for which training is specified, prepare training modules as specified below. Use Operating and Maintenance Manuals during training sessions. Training modules include but are not limited to:

.1 Operational Requirements and Criteria: equipment function, stopping and starting, safeties, operating standards, operating characteristics, performance curves, and limitations;

.2 Troubleshooting: diagnostic instructions, test and inspection procedures;

.3 Documentation: equipment/system warranties, and manufacturer's/supplier's parts and service facilities, telephone numbers, email addresses, and the like;

.4 Maintenance: inspection instructions, types of cleaning agents to be used as well as cleaning methods, preventive maintenance procedures, and use of any special tools;

.5 Repairs: diagnostic instructions, disassembly, component removal and repair instructions, instructions for identifying parts and components, and review of any spare parts inventory.

.5 Before instructing Owner's designated personnel, submit to Consultant for review preliminary copy of training manual and proposed schedule of demonstration and training dates and times. Incorporate Consultant's comments in final copy.

.6 Obtain in writing from Consultant, list of Owner's representatives to receive instructions. Submit to Consultant prior to application for Certificate of Substantial Performance of the Work, complete list of systems for which instructions were given, stating for each system:

.1 date instructions were given to Owner's staff;

.2 duration of instruction;

.3 names of persons instructed;

.4 other parties present (manufacturer's representative, consultants, etc.).

.7 Obtain signatures of Owner's staff to verify they properly understood system installation, operation and maintenance requirements, and have received operating and maintenance instruction manuals and "as-built" record drawings.

.8 Submit to Consultant copy of electronic version of training materials loaded on USB flash drive. Include in operating and maintenance manuals submission.

## 1.36 FINAL INSPECTION

.1 Submit to Consultant, written request for final inspection of systems. Include written certification that:

.1 deficiencies noted during job inspections have been completed;

.2 field quality control procedures have been completed;

.3 maintenance and operating data have been completed and submitted to, reviewed with Consultant and accepted by Owner;

.4 tags and nameplates are in place and equipment identifications have been completed;

.5 clean-up is complete;

.6 spare parts and replacement parts specified have been provided and acknowledged by Consultant;

.7 as-built and record drawings have been completed and submitted to and reviewed with Consultant and accepted by Owner;

.8 Owner's staff has been instructed in operation and maintenance of systems;

.9 commissioning procedures have been completed;

.10 fire alarm verification has been 100% completed and Verification Certificate has been submitted to and accepted by Consultant.

.2

## PART 2 - PRODUCTS

NOT USED

## PART 3 - EXECUTION

NOT USED

**END OF SECTION**

## PART 1 - GENERAL

### 1.01 REFERENCE

.1 Division 00 and Division 01 apply to and are a part of each Electrical Division Section.

### 1.02 APPLICATION

.1 This Section specifies products, criteria and characteristics, and methods and execution that are common to one or more Sections of Electrical Divisions. It is intended as a supplement to each Section of Electrical Divisions and is to be read accordingly.

### 1.03 SUBMITTALS

.1 Submit shop drawings for products of this Section.

.2 Additionally as part of shop drawing submission process, submit following to Consultant for review:

.1 sample of each proposed type of access door if supplied under work of this Division, as well as electronic copies of reflected ceiling plan drawings and wall elevation drawings showing proposed access door locations;

.2 dimensioned location drawings indicating required sleeves and formed openings in structural poured concrete or precast concrete construction or in roofing, and locations of cutting or drilling required for Electrical Divisions work;

.3 samples of materials and any other items as specified in succeeding Sections of Electrical Divisions;

.4 weight loads of selected equipment (upon request);

.5 equipment nameplate and warning sign proposed nomenclature, print type, symbols, sizing and colours;

.6 fire stopping installation drawings with ULC certifications;

.7 copies of prior to start of construction approvals from local governing authorities having jurisdiction.

.3 Prior to application for Substantial Performance of the Work, submit following to Consultant for review (note: funds will be withheld until each of following items have been completed and documented to satisfaction of Consultant):

.1 fire alarm system testing and verification report of each component of work; devices to be certified working and in proper order;

.2 final distribution system testing and arc flash study performed and documented to satisfaction of Consultant;

.3 structured network cabling system tested and verified to be operating and performing in accordance with specified standards.

## 1.04 PATIENT CARE AREAS

.1 Comply with requirements for patient care areas (PCA) included in Work as required by Section 24 of OESC. Patient care areas are identified on drawings or in schedule appended to end of this Section. Confirm final PCA nomenclature with Consultant prior to start of Work.

.2 Note that room and area names/numbers are based on information available at time of preparation of documents and such names/numbers may be revised in later documents or during construction of Work. In no way are patient care area classifications to be reduced due to name/number revisions. Be responsible for confirming exact classifications as per local governing electrical code requirements to suit final construction and any design changes made by Consultant.

.3 Provide testing and verification of circuits and devices to confirm compliance with OESC.

## 1.05 HAZARDOUS MATERIALS

.1 Hazardous materials and infectious materials are known to be present on site in existing buildings, including but not limited to following:

.1 aspergillus;
.2 mould;
.3 asbestos;
.4 PCBS;
.5 lead;
.6 mercury.

.2 Division 01 identifies specific requirements and if such materials are present, include for costs to be educated and trained on special working conditions, to work in areas with hazardous materials including protective clothing, gear, tenting, enclosures, etc., and perform necessary partitioning/tenting/ventilation work to isolate areas and maintain disturbances of such materials to a minimum. Comply with infection control requirements and those of governing local Health and Welfare authority. An asbestos abatement report is available for review from Consultant. Unless otherwise noted, any abatement removal is responsibility of another Division of Work.

.3 If proper abatement procedures are not followed, be responsible for bearing full cost of a full time qualified abatement inspector chosen by Owner. In areas where work is being done above or below an area being occupied, any slab penetrations into vertically adjacent occupied space are to utilize a proper enclosure in area of that work on that occupied floor. Be responsible for failure to comply with special requirements in working in areas of hazardous materials.

.4 Include for company specializing in removal and disposal of materials containing PCB’s to remove and dispose off-site luminaire ballasts containing PCB’s. Check luminaires being deleted for ballasts containing PCB’s. Disconnect and dispose off-site such ballasts. Only companies that are certified and comply with Ministry of Environment and Ministry of Transport regulations with regards to hazardous waste materials are to be used to perform this Work. Prior to start of Work, submit to Consultant a copy of PCB disposal certificate and identification of Ministry authorized and designated disposal site.

.5 Fluorescent lamps being replaced and containing mercury are to be properly transported offsite and disposed of as per local governing Ministry guidelines.

## 1.06 PRODUCT REQUIREMENTS IN SPECIAL AREAS

.1 Provide certain areas such as Mental Health Areas and children care areas with special provisions such that intended users of area are not exposed to or subject to hazards from supplied products. In non-climate controlled areas, supplied products are to be manufactured for use in such environments.

.2 Provide tamper-proof and vandal/impact resistant receptacles, switches or any communication devices in Mental Health Areas. Such provisions include but are not limited to providing tamperproof screws, polycarbonate covers, or locating such controls out of these areas, as approved by Consultant.

.3 Products in non-climate controlled areas are to include weatherproof provisions such as gasketted covers, corrosion resistant hardware, weatherproof finishes, etc. Devices to be manufactured to operate in extreme temperatures.

.4 Products in public areas such as exterior areas and in parking areas are to also be vandal-proof and impact resistant.

# PART 2 - PRODUCTS

## 2.01 CONDUITS

.1 EMT (Thinwall), galvanized electrical metallic tubing to CSA C22.2 No. 83, complete with factory made bends where site bending is not possible and joints and terminations made with steel couplers and steel set screw type connectors with insulated throats, and concrete tight where required.

.2 Galvanized steel flexible liquid tight metallic conduit to CSA C22.2 No. 56, complete with Ideal "Steel Tough" liquid-tight flexible conduit connectors at terminations.

.3 Galvanized steel flexible metallic conduit to CSA C22.2 No. 56, complete with proper and suitable squeeze type connectors at terminations.

.4 CSA approved and labelled, FT-4 rated, rigid plastic (PVC) conduit complete with site made heat gun bends on conduit to 50 mm (2") diameter, factory made elbows in conduit larger than 50 mm (2") diameter, solvent weld joints, factory made expansion joints where required, and terminations made with proper and suitable connectors and adaptors.

## 2.02 OUTLET BOXES

.1 CSA approved stamped galvanized steel outlet boxes.

.2 CSA certified rigid plastic (PVC) outlet boxes.

.3 Standard general purpose service floor boxes: CSA approved, UL scrub water compliant, fully adjustable angular and vertically, formed steel/cast iron, round single gang / rectangular or square multi-gang as required, flush in concrete floor installation, boxes complete with conduit knockout openings, adjustable collars, hinged flip open brass covers with provisions for mounting of duplex power receptacles, telephone jacks and data jacks. Provide barriered boxes when boxes

contain both power and communication outlets and different voltage levels. Size boxes to suit thickness of floor slab as confirmed with Consultant and also to suit required bending radii of conductors. Refer to drawings for number of gang requirements. Acceptable manufacturers are Hubbell, Legrand and Thomas & Betts. Special floor boxes are specified elsewhere in another Section.

.4 Each outlet box and back box to be suitable in respects for application and complete with suitable securing lugs, connectors suitable for connected conduit, knockouts and, where necessary, suitable plaster rings, concrete rings, covers, carpet flanges and any other required accessory.

.5 Electrical boxes exposed exterior of building or in non-climate controlled locations to be weatherproof boxes complete with gasketted covers/faceplates.

## 2.03 PULLBOXES AND JUNCTION BOXES

.1 Galvanized or prime coat plated steel, suitable in respects for application and complete with screw-on or hinged covers as required, and connectors suitable for connected conduit.

.2 Physical size of pullboxes to be as required by local governing electrical code to suit number and size of conduits and conductors.

.3 Each box to be suitable in respects for application and complete with suitable securing lugs, connectors suitable for connected conduit, knockouts and, where necessary, suitable plaster rings, concrete rings, covers and any other required accessory.

.4 Boxes exposed exterior of building or in non-climate controlled locations to be weatherproof boxes complete with gasketted covers.

## 2.04 SLEEVES

.1 Galvanized steel sleeves as follows:

.1 No. 24 gauge with an integral flange at one (1) end to secure sleeve to formwork construction;

.2 Schedule 40 pipe;

.2 Schedule 40 PVC sleeves.

## 2.05 FIRESTOPPING AND SMOKE SEAL MATERIALS

.1 Asbestos-free, elastomeric materials and intumescent materials, tested, listed and labelled by ULC in accordance with CAN/ULC S115, and CAN/ULC S101 for installation in ULC designated firestopping, and smoke seal systems to provide a positive fire, water and smoke seal and a fire resistance rating (flame, hose stream and temperature) no less than fire rating for surrounding construction.

.2 Firestopping and smoke seal material system to be specifically ULC certified with designated reference number for its specific installation. As part of shop drawing submission, submit copies of firestopping drawings with ULC certificate and system number for each specific installation.

.3 Materials are to be compatible with abutting dissimilar materials and finishes and complete with primers, damming and back-up materials, supports, and anchoring devices in accordance with firestopping manufacturer's recommendations and ULC tested assembly. Coordinate material requirements with trades supplying abutting areas of materials.

.4 Submit schedule of opening locations and sizes, penetrating items, and required listed design numbers to seal openings to maintain fire resistance ratings.

.5 Typically, for openings of up to 250 mm (10") in diameter, provide putty pad type firestop materials equivalent to Specified Technologies Inc. "SpecSeal" intumescent, non-hardening, water resistant putties containing no solvents, inorganic fibres or silicone compounds.

.6 Typically, for openings of greater than 250 mm (10") in diameter, and for rectangular openings, provide pillow type firestop materials equivalent to Specified Technologies Inc. "SpecSeal" re-enterable, non-curing, mineral fibre core encapsulated on six sides with intumescent coating contained in a flame retardant poly bag.

.7 For applications where fire rated firestopping cable pathway system is to be special structurally reinforced, reusable and require no or minimal alterations to firestop component when cables are either added or removed, provide Specified Technologies Inc. "EZ-PATH" device modules comprised of steel raceway with intumescent foam pads allowing 0 to 100 percent cable fill. Structure to be sturdy enough to stand up to constant modification and use, but maintain its ULC firestopping rating.

.8 Supply products of a single manufacturer for use on work of this Division.

.9 Installer to be manufacturer trained and certified on specific product. Submit copy of certificate with shop drawings.

.10 Include for manufacturer’s authorized representative to inspect and verify each installation and application. Submit test report signed and verified by system installer’s authorized representative and manufacturer’s representative.

.11 Acceptable certification to also include certification by Underwriters Laboratories of Northbrook IL, using tests conforming to ULC-S115 and given cUL listing published by UL in their "Products Certified for Canada (cUL) Directory".

.12 Acceptable manufacturers are:

.1 Specified Technologies Inc.;
.2 3M Canada Inc.;
.3 Tremco;
.4 A/D Fire Protection Systems;
.5 Nelson;
.6 Hilti Canada.

## 2.06 FASTENING AND SECURING HARDWARE

.1 Concrete inserts - Crane Canada Ltd., No. 4-M for concrete work for single or double conduit, cable tray, etc., runs and equipment. Unistrut Ltd. multiple type inserts for runs of three (3) or more conduits etc., or where a grid support system is required.

.2 Concrete fasteners – "WEJ-IT" anchors, lead cinch anchors and/or "STAR" or "PHILLIPS" self-drilling anchors.

.3 Masonry inserts – "WEJ-IT" expansion shields and machine bolts or, for light loads, fibre or lead plugs and screws.

.4 Drywall or plaster wall and/or ceiling fasteners – 2-wing spring toggles.

.5 Structural steel - Crane Canada Ltd., beam clamps.

.6 Metal framing channels – typical 40 mm (1-5/8") width but increased where required to suit application, galvanized steel channels complete with required fittings and ancillary hardware. Acceptable manufacturers of framing channels are:

.1 Unistrut;
.2 Thomas & Betts;
.3 Hilti;
.4 Eaton B-Line.

.7 Acceptable manufacturers of fastening and securing hardware:

.1 Crane;
.2 Hilti;
.3 Thomas & Betts.

.8 Metal "J" hooks or Panduit "J-Pro" cable support systems for communications system cabling in accessible ceiling spaces were conduit or cable tray is not being provided. Use of J-hooks is subject to approval from Owner and review with Consultant.

.9 Velcro tie wraps for bundling and securing cables.

## 2.07 ACCESS DOORS

.1 Coordinate consistency of look and finish of access doors on project with each Division of Work. Coordinate exact requirements with General Trades Contractor.

.2 Access doors to be rust resistant steel door panels, with concealed hinges and positive locking and self-opening screwdriver operated lock. Wall type frame to be suitable for wall installation and have integral keys for plaster walls. Doors in tile wall to be stainless steel and in ceilings to be suitable for plaster covering with only frame joint showing. All other doors to be prime painted steel.

.3 Size access door to suit the concealed work for which they are supplied, and wherever possible they are to be of standard size for all applications, but in any case they are to be minimum 300 mm x 300 mm (12" x 12") for hand entry and 600 mm x 600 mm (24" x 24") for body entry.

.4 Lay-in type tiles, properly marked, may serve as access panels. Coordinate marking of ceiling tiles with Consultant. Panels in glazed tile walls to be 12 gauge, 304 alloy stainless steel, No. 4 finish, with recessed frame secured with stainless steel counter-sunk flush head screws.

.5 Panels in plaster surfaces to have dish-shaped door and welded metal lath, ready to take plaster. Provide a plastic grommet for door key access.

.6 Other access doors to be welded 12 gauge steel, flush type with concealed hinges, lock and anchor straps, complete with factory prime coat. Submit to Consultant for review, details of non-standard door construction details.

.7 Access doors in fire rated ceilings, walls, partitions, structures, etc., to be ULC listed and labelled and of a rating to maintain fire separation integrity.

.8 Where access doors are located in surfaces where special finishes are required, they are to be of a recessed door type capable of accepting finish in which they are to be installed so as to maintain final building surface appearance throughout.

.9 Acceptable manufacturers include Le Hage, SMS, Pedlar and Acudor.

## 2.08 IDENTIFICATION NAMEPLATES

.1 Laminated plastic (Lamacoid) black-white-black with bevelled edges, stainless steel screws, and proper identification engraving. Each nameplate to be sized to suit equipment for which it is provided, and required wording. Confirm nomenclature with Consultant. Various colour configurations to be used to differentiate systems. Confirm exact colour scheme with Consultant and/or Owner.

.2 Brother "P-Touch", portable electronic labelling system complete with self-adhesive, permanent printed labels with required nomenclature.

## 2.09 SYSTEM BACKBOARDS

.1 FSC (Forest Stewardship Council), G1S (good one side) construction grade fir plywood, containing no added urea formaldehyde, flame retardant prime coat painted on exposed surfaces, minimum 20 mm (3/4") thick, as sized on drawings and with flame spread rating in accordance with local governing building code requirements.

## 2.10 MOTOR STARTER PANELS

.1 Minimum No. 14 gauge sheet steel panels complete with steel angle reinforcing, framing and suitable splitter trough, fully primed and enamel painted, sized to accommodate starters required with spare space and capacity for at least two additional units.

## 2.11 SPRINKLER PROTECTION

.1 Provide drip shields for protection of surface mounted equipment enclosures from water spray and dripping of liquids. Features of shields include:

.1 factory constructed by respective equipment manufacturers;

.2 constructed from non-combustible materials (sheet steel);

.3 enamel painted to match equipment;

.4 surfaces and edges filled/sanded smooth prior to painting;

.5 supported from equipment with structural steel rods/metal framing or other method reviewed with Consultant;

.6 structural support finish painted to match shield.

.2 Include with equipment shop drawings, detailed dimensions of drip shields and methods of supporting.

.3 Equipment with top cable/conduit entries to include additional sealing of entries with gasketting and/or waterproof sealant to prevent water from entering enclosure.

.4 Design ventilation louvers such that live components are not exposed to water spray and dripping liquids.

.5 Above requirements are additional minimum "sprinkler protection" standards for equipment specified as NEMA (EEMAC) 1, 2 or 12.

.6 Obtain CSA approval where required by local governing authorities.

## PART 3 - EXECUTION

### 3.01 GENERAL CONDUIT INSTALLATION REQUIREMENTS

.1 Install conduit concealed in finished areas, and concealed to degree made possible by finishes in partially finished and unfinished areas. Conduit may be exposed in unfinished areas such as Electrical and Mechanical Rooms, unless otherwise noted on drawings or specified herein. Refer to and examine architectural drawings and room finish schedules to determine finished, partially finished or unfinished areas of building. Documents do not identify exact routing. Where shown, routing is diagrammatic, identifying general requirements of routing and locations. Include for necessary offsets, fittings, transformations and similar items required as a result of obstructions and other architectural or structural details not shown.

.2 Where conduits are exposed, arrange them to avoid interference with other work, parallel to building lines and install as high as possible. Do not install conduits within 150 mm (6") of "hot" pipes or equipment unless conduits are associated with equipment. Independently run conduit to be supported from wall/ceiling structure, not from ceiling hangers, ductwork, piping, cable trays, formed steel decking, etc. Do not run conduits within 900 mm (3') of equipment access opening covers.

.3 Where conduit is proposed to be embedded within structural concrete, obtain Owner’s approval and review with Consultant (Structural Engineer). Install such conduit in compliance with requirements of latest edition of CSA Standard CAN3-A23.1, "Concrete Materials, and Methods of Concrete Construction". Confirm and review with Structural Consultant, proper installation practices and methods. In areas where Consultant has directed conduit not to be embedded in concrete, run conduits through beams via sleeved openings pre-coordinated and reviewed with General Contractor and by Consultant (Structural Engineer). Do not embed conduit runs in concrete slab of parking garage areas, unless approved by Owner and reviewed with Consultant.

.4 So as not to impair required strength of structure, following criteria to be generally followed but which is to be reviewed and coordinated with Consultant prior to start of Work:

.1 where conduits pass by a column, stay at least two times thickness of slab and drop away from column;

.2 where conduits terminate adjacent to a column or wall, bring conduit in toward column/wall as close to 90° to face of column as possible within two times thickness of slab and drop away from column;

.3 maximum size of conduit in structural slabs is 1/5 of solid portion of slab thickness;

.4 where more than two conduits are adjacent to each other, they are to be spaced greater of 3 diameters or 100 mm (4") apart;

.5 total of depth of conduits crossing over each other is to be less than one-third thickness of slab;

.6 place conduit in middle third of thickness of slab; do not lay conduit directly on reinforcing steel;

.7 do not run conduit adjacent to parallel reinforcing bars;

.8 do not run conduit longitudinally in beam without approval of Owner and review with Consultant; pass through beams at right angles to span of beam;

.9 where conduits pass through beams, maintain at least twice depth of beam separation away from supports;

.10 do not run conduits in slab beside a drop or beam within twice depth of slab from edge of drop or beam;

.11 do not run conduits through shear walls or columns without approval of Owner and review with Consultant;

.12 do not place conduit in structural elements in parking garage structures, water retaining structures or structures subjected to de-icing chemicals, without approval of Owner and review with Consultant.

.5 For proposed use of conduit runs underground below slab include following provisions:

.1 concrete encased ductbank with conduits of non-ferrous materials and sloped to drain properly into pit;

.2 proper drain pit;

.3 system to be a pull-in system;

.4 20% spare conduits (with minimum of at least 1);

.5 system proposal to consider and address any effects of magnetic fields.

.6 For isolation rooms, seal conduits that penetrate through walls, floor, or ceilings with suitable elastomeric and intumescent materials around penetrating item and within any openings of item to ensure complete isolation of rooms. Such sealing materials are to be suitable for specific applications and maintain fire rating of

penetrated surface and not be of a hazardous material. Submit shop drawings of proposed materials.

.7 Conduits are sized on drawings, but in absence of type and sizing, type and size to suit intended application in accordance with applicable local governing electrical code requirements. Sizes identified on drawings are minimum sizes and are not to be decreased unless approved by Owner and reviewed with Consultant.

.8 Where receptacle type devices are located in existing floors and/or where feeds are required to furniture systems in open spaces, and where chasing of floor slab to run conduit is not acceptable to Owner after review with Consultant provide fire rated "poke-thru" assembly installed through floor and feed from conduit runs provided in ceiling space of floor below.

## 3.02 INSTALLATION OF CONDUIT

.1 Provide conduit for conductors except armoured cable and copper sheathed mineral insulated conductors, and except where duct or similar raceway materials are provided.

.2 Provide conduit as follows:

.1 for interior building surface mounted conductors greater than 600 V – rigid galvanized steel;

.2 for branch circuit conductors underground inside building, and underground outside building beneath concrete, asphalt, and similar paving material-rigid PVC;

.3 for short branch circuit connectors to motorized equipment and distribution transformers (minimum length 450 mm (18"), maximum length 600 mm (24") with 180° loop where possible) – galvanized steel flexible liquid-tight conduit;

.4 at points, where conductors cross building expansion joints – galvanized steel flexible conduit with no less than 600 mm (24") of extra curve;

.5 for branch circuit conductors in poured concrete slab – rigid PVC;

.6 for interior conduit above 50 mm (2") diameter containing distribution conductors or communication systems conductors (fire alarm, telephone etc.) (except as noted above) – EMT with separate insulated ground conductor;

.7 for conductors except as noted above or elsewhere in this Specification – EMT.

.3 Run rigid conductors in rigid type conduits suitable for application. Do not use flexible conduit.

.4 Secure conduit located in poured concrete work in place in a manner such that conduit will not float or move when concrete is poured. Adequately protect such conduit from damage prior to and during concrete pour, and from concrete and water penetration.

.5 Review with Consultant prior to Start of Work, maximum allowable size of conduit for installation in poured concrete. Placement of reinforcing steel in structural concrete work will take precedence over placement of conduit. Spaced

adequately multiple runs of conduit in poured concrete work, as reviewed with Consultant.

.6 Install flexible polyethylene conduit in continuous lengths wherever possible and "snake" conduit in trench. Where joints are necessary, make same with nylon inserts and stainless steel gear type clamps. Terminate with rigid conduit threadless connectors. Grade bed to provide proper drainage of conduits.

.7 Support underground conduit on a well-tamped flat bed of earth, free from rocks or protrusions of any kind. Grade and slope bed to provide conduits and ducts with proper drainage. Coordinate with General Trades Contractor for provision of means to carry away drainage water. Obtain required approvals of work from local governing electrical utility and review with Consultant prior to back filling and covering. Provide pull cord in each duct run.

.8 Provide manufactured expansion joints in rigid PVC plastic conduit at spacing as recommended by conduit manufacturer.

.9 Provide a separate ground conductor in plastic conduits.

.10 Support and secure surface mounted and suspended single or double runs of metal conduit at support spacing in accordance with local governing electrical code requirements by means of galvanized pipe straps, conduit clips, ringbolt type hangers, or by other proper manufactured devices.

.11 Support multiple mixed size metal conduit runs with Unistrut Ltd., Electrovert Ltd. "CANTRUSS" or Burndy Ltd. "FLEXIBLE" conduit racks spaced to suit spacing requirements of smallest conduit in group.

.12 Unless otherwise noted, provide conduit fittings constructed of same materials as conduit and which are suitable in respects for application.

.13 Provide proper adaptors for joining conduits of different materials.

.14 Cut square and properly ream site cut conduit ends.

.15 Provide conduit as sized on drawings. Size conduit not sized on drawings in accordance with latest edition of local governing electrical code with consideration that sizes of branch circuit conductors indicated are minimum sizes and must be increased as required to suit length of run and voltage drop in accordance with voltage drop schedule found on drawings or at end of this section. Where conductor sizes are increased to suit voltage drop requirements, increase scheduled or specified conduit size to suit. Unless otherwise noted on drawings or required by local governing electrical code or specified elsewhere, conduit to be of minimum size 19 mm (3/4") diameter. Structured network cabling system conduit to be of minimum 26 mm (1") diameter, unless otherwise noted.

.16 Site made bends for conduit to maintain full conduit diameter with no kinking, and conduit finishes are not flake or crack when conduit is bent.

.17 Plug ends of roughed-in conduits which are exposed during construction with approved plugs.

.18 Ensure that conduit systems which are left empty for future wiring are clean, clear, capped and properly identified at each termination point. Provide end bushing and suitable fish wires in such conduits.

.19 Provide empty conduits to ceiling spaces from flush mounted panelboards located below and/or near hung ceiling. Refer to drawing detail.

## 3.03 EXPANSION FACILITIES FOR CONDUIT CROSSING BUILDING EXPANSION JOINTS

.1 Wherever concealed or surface mounted conduits cross building expansion joints, provide expansion facilities to permit free movement without imposing additional stress or loading upon support system, and to prevent excessive movement at joints and connections, in accordance with drawing details and local governing inspection approvals.

## 3.04 INSTALLATION OF OUTLET BOXES AND BACK BOXES

.1 Provide an outlet box or back box for each luminaire, wiring device, telephone outlet, fire alarm system component, communications systems components, and each other such outlet.

.2 Size boxes to accommodate exact supplied components and for bending radii of installed cables. Confirm requirements with respective system vendors.

.3 Outlet boxes flush mounted in interior construction, surface mounted in concealed interior locations, and surface mounted in exposed interior locations where connecting conduit is EMT, to be stamped and galvanized steel outlet boxes unless otherwise noted.

.4 Provide sealing around boxes in walls where insulation and vapour barrier is present or for walls of rooms that are sealed. Maintain sealing system of wall.

.5 Outlet boxes in underground plastic conduit systems to be rigid PVC plastic outlet boxes, unless otherwise noted.

.6 Outlet boxes for flush floor mounted devices to be concrete tight formed galvanized steel fully adjustable flush floor boxes. Locate in to position and install in accordance with manufacturer’s instructions. Coordinate installation with trades pouring concrete floor slab or trade responsible for floor construction.

.7 Provide barriered outlet box for switches connected to normal and emergency power and share a common faceplate.

.8 Provide outlet boxes for special wiring devices, for special equipment and special applications. Refer to requirements specified in other Sections and/or on drawings.

.9 Size and arrangement of outlet boxes to suit device which they serve.

.10 Mounting heights and locations for outlet boxes are typically indicated on drawings, however confirm exact location and arrangement of outlets prior to roughing-in. Architectural drawings and Consultant’s instructions have precedence over electrical drawing diagrammatic layouts and specified mounting heights and locations.

.11 Do not install outlet or back boxes "back-to-back" in walls and partitions. Stagger such outlets and seal against noise transmission in accordance with drawing details. "Thru-wall" type boxes will not be permitted for any application.

.12 Provide blank coverplates on existing obsolete boxes which are to remain in position.

.13 Provide blank coverplates over boxes left empty for future installation of devices. Clearly identify each box as to its intended use, to Owner's approval and reviewed with Consultant. Generally, provide stainless steel type blank coverplates.

## 3.05 INSTALLATION OF PULLBOXES AND JUNCTION BOXES

.1 Provide pullboxes in conduit systems wherever shown on drawings, and/or wherever necessary to facilitate conductor installations. Generally, conduit runs exceeding 30 m (100") in length, or with more than two - 90° bends, are to be equipped with a pullbox installed at a convenient and suitable intermediate accessible location.

.2 Size boxes to accommodate exact supplied system and for bending radii of installed cables. Confirm requirements with respective system vendors.

.3 Provide junction boxes wherever required and/or indicated on drawings and as required by local governing electrical code.

.4 Provide sealing around boxes in walls where insulation and vapour barrier is present or for walls of rooms that are sealed. Maintain sealing system of wall.

.5 Boxes in rigid conduit and EMT inside building to be stamped galvanized or prime coated steel.

.6 Boxes in exterior rigid conduit and boxes in perimeter wall where insulation and vapour barrier is present, to be "Condulet" cast gasketted boxes, unless otherwise noted.

.7 Boxes in plastic conduit to be rigid PVC plastic boxes complete with required couplings.

.8 Pullboxes and junction boxes to be accessible after work is completed.

.9 Accurately locate and identify concealed pullboxes and junction boxes on "As-built" record drawings.

.10 Clearly identify main pull or junction boxes (excluding obvious outlet boxes) by painting outside of covers. Spray painting is not permitted unless approved by Owner and reviewed with Consultant. Paint colours to be in accordance with following schedule:

.1 lighting-yellow;

.2 normal power-blue;

.3 essential power-orange;

.4 fire alarm-red;

.5 telephone-green;

.6 miscellaneous signals-brown.

.11 In addition to painting miscellaneous signal boxes, clearly identify specific system in which box is installed.

.12 Cover boxes in fire walls with aluminium tape and seal with caulking.

## 3.06 INSTALLATION OF SLEEVES

.1 Where conduits, round ducts and conductors pass through structural poured concrete, provide sleeves of type suitable for application, and approved by local governing codes.

.2 Sleeves in concrete slabs, except as noted below, are to be No. 24 gauge or equivalent, with an integral flange to secure sleeves for formwork construction.

.3 Sleeves in waterproof concrete slabs and in other slabs where waterproof sleeves are required are to be lengths of Schedule 40 pipe sized to extend 100 mm (4") above floor.

.4 Sleeves in poured concrete walls and foundation are to be Schedule 40 pipe.

.5 Size sleeves, unless otherwise noted, to leave 13 mm (1/2") clearance around conduit, duct, conductor, etc. Void between sleeves and conduit, duct, conductors, etc., to be packed and sealed for length of sleeves as in accordance with article entitled "Firestopping and Smoke Seal Materials" specified here in this Section. Ensure that sleeves set in exterior walls are packed and sealed with governing authority approved materials suitable for application and that both ends of sleeves are packed watertight with approved permanently flexible and water tight materials. Exact responsibility of work to be coordinated with General Trades Contractor.

.6 Submit to concrete reinforcement detailer at proper time, drawings indicating required sleeves, recesses and formed openings in poured concrete work. Completely and accurately dimension such drawings and relate sleeves, recesses and formed openings to suitable grid lines and elevation datum.

.7 Supply sleeves of a water protecting type in accordance with detail found on drawings for installation in following locations:

.1 in Mechanical and Fan Room floor slabs, except where on grade;

.2 in slabs over Mechanical, Fan, Electrical and Telephone Equipment Rooms or closets;

.3 in floors equipped with waterproof membranes.

.8 "Gang" type sleeving to be permitted only with approval of Owner and reviewed with Consultant.

.9 Terminate sleeves for work which is exposed, so that sleeve is flush at both ends with wall, partition, or slab surface such that sleeve may be covered completely by escutcheon plates.

## 3.07 INSTALLATION OF FIRESTOPPING AND SMOKE SEAL MATERIALS

.1 Where work penetrates or punctures fire rated construction, provide ULC certified, listed and labelled firestopping and smoke sealing packing material systems to

seal openings and voids around and within raceway and to ensure that continuity and integrity of fire separation is maintained. Openings not in immediate vicinity of working areas are to be firestopped and sealed same day as being opened.

.2 Install firestopping and smoke seal materials for each installation in strict accordance with specific ULC certification number and manufacturer's instructions. Comply with local governing building code requirements and obtain approvals from local building inspection department. Ensure that openings through fire separations do not exceed maximum size wall opening, and maximum and minimum dimensions indicated in ULC Guide No. 40 U19 for Service Penetration Assemblies and firestopping materials.

.3 Ensure that continuity and integrity of fire separation is maintained and conform to requirements of latest edition of ULC publication "List of Equipment and Materials, Volume II, Building Construction".

.4 Comply with following requirements:

.1 Examine substrates, openings, voids, adjoining construction and conditions under which firestop and smoke seal system is to be installed. Confirm compatibility of surfaces.

.2 Verify penetrating items are securely fixed and properly located with proper space allowance between penetrations and surfaces of openings.

.3 Report any unsuitable or unsatisfactory conditions to Consultant in writing, prior to commencement of work. Commencement of work will mean acceptance of conditions and surfaces.

.4 Mask where necessary to avoid spillage and over coating onto adjoining surfaces. Remove stains on adjacent surfaces.

.5 Prime substrates in accordance with product manufacturer's written instructions.

.6 Provide temporary forming as required and remove only after materials have gained sufficient strength and after initial curing.

.7 Tool or trowel exposed surfaces to a neat, smooth, and consistent finish.

.8 Remove excess compound promptly as work progresses and upon completion.

.5 Notify Consultant when work is complete and ready for inspection, and prior to concealing or enclosing firestopping and smoke seal materials and service penetration assemblies. Arrange for final inspection of work by local governing authority inspector prior to concealing or enclosing work. Make any corrections required.

.6 On completion of firestopping and smoke sealing installation, submit a Letter of Assurance to Consultant certifying the firestopping and smoke sealing installation has been carried out throughout the building to service penetrations and that installation has been performed in strict accordance with requirements of local governing building code, any applicable local municipal codes, ULC requirements, and manufacturer's instructions.

.7 Manufacturer's authorized representative to inspect and verify each installation and provide a test report signed by installing trade and manufacturer's representative. Test report to list each installation and respective ULC certification and number.

.8 Where work requires removal of existing firestopping materials and replacement of firestopping materials after cabling changes have been made, ensure that replacement material is same material and manufacturer of existing if any remains in place, or ensure that all existing material is removed before installation of replacement material.

## 3.08 INSTALLATION OF FASTENING AND SECURING HARDWARE

.1 Provide fasteners and similar hardware required for conduit, duct, raceway, conductors, etc. and for equipment hanger and/or support material unless otherwise noted.

.2 Accurately and properly set concrete inserts in concrete framework. Where multiple type inserts are used, space same to suit requirements of smallest conduit, etc., in group.

.3 Fasten hanger and support provisions to masonry with expansion shields and machine bolts, or, for light loads, use plugs, and screws.

.4 In drywall or plaster walls and/or ceilings use two wing toggles and for heavy loads, provide steel anchor plates with two or more toggles to spread load.

.5 Provide beam clamps for attaching hanging and/or support provisions to structural steel, or where approved by Owner and reviewed with Consultant, weld hanging and support provisions to structural steel.

.6 Explosive powder actuated fasteners are not permitted unless specific approval for their use and type has been obtained from Owner and reviewed with Consultant.

.7 Under no circumstances use ceiling suspension hangers or grids for suspension of conduit and conductors. Install supports to permanent structure of building, limited to areas that will not damage structural stability.

.8 Provide "J" hooks in accessible ceiling spaces where conduit is not provided for structured cabling runs or other telecommunication cabling, as approved by Owner and reviewed with Consultant.

.9 Comply with J-hook manufacturer's loading limitations and spacing criteria. Do not exceed 1.2 m (4') spacing interval. Add additional J-hooks if cabling sags, at discretion of Consultant. Drill anchors for J-hooks into slab not into post tensioned beams. Do not install more than one system on each J-hook.

.10 Install Velcro tie wraps on bundled telecommunication cables and do not over tighten. Provide FT6/CMP rated wraps in plenum type spaces as per local building code requirements.

.11 Comply with Consultant's (Structural Engineer's) limitations for maximum penetrations of securing hardware into concrete slabs.

## 3.09 SUPPLY OF ACCESS DOORS

.1 Supply access doors to give access to junction boxes, pull boxes, conductor joints and other similar electrical work which may need maintenance or repair but which is concealed in inaccessible construction.

.2 Before commencing installation of work, coordinate with other trades and prepare on a set of reflected ceiling plans and wall elevations, complete layouts of access doors. Submit these layouts for Consultant's review and show exact sizes and locations of such access doors. Locate and arrange electrical work to suit.

.3 Access doors to be installed by trade responsible for particular type of construction in which doors are required. Supply access doors to trade installing same at proper time.

.4 Wherever possible, access doors to be of a standard size for each application. Confirm exact dimensions and minimum size restrictions with Consultant prior to ordering.

.5 Coordinate with Mechanical Contractor and General Trades Contractor to ensure that access doors on project are provided by a single manufacturer, installed as part of work of General Trades Contractor and that work involving both mechanical and electrical services should where possible be accessible from common access door. Coordinate work to ensure that common location access doors are not supplied by both Mechanical Divisions and Electrical Divisions.

## 3.10 INSTALLATION OF IDENTIFICATION NAMEPLATES

.1 For each piece of electrical distribution equipment from electrical source of supply up to and including panelboards, for special control panels and cabinets, and for each other piece of electrical equipment, provide engraved Lamacoid identification nameplates secured to apparatus with stainless steel screws. Nameplates to indicate source of electrical supply and include Consultant's equipment identification number. Identify whether equipment is on "NORMAL POWER SYSTEM" or "ESSENTIAL POWER SYSTEM". Comply with CSA Z32 requirements.

.2 Equip large multiple cell or component apparatus such as switchboards and distribution panels with main nameplates identifying equipment, voltage characteristics, capacity and source of supply, and with sub-nameplates clearly identifying each cell or component and its service.

.3 Panelboard nameplates to identify panelboard number as designated on drawings, unless otherwise instructed. Nameplates for disconnect switches, control panels, and cabinets to outline their service and source of supply.

.4 In areas where equipment having removable doors that can be commonly installed on different equipment, ensure that each door is identified to which piece of equipment it is associated with, such that nameplates are with correct equipment.

.5 Provide nameplates engraved "Dedicated Circuit" on faceplates for receptacles on dedicated circuits in Critical and Intermediate Patient Care Areas. Provide nameplates engraved "Housekeeping" for Housekeeping receptacles generally located in Corridors with exact extent to be determined on site. In these areas

where lamacoid nameplates are employed, engrave source of supply (circuit designation) on these nameplates as well.

.6 Faceplates for devices not in patient care areas or not in corridors in vicinity of patient care areas are to be labelled with plastic self-adhesive printed labels with similar information as specified for nameplates. Provide labels on inside and outside face of faceplates. Apply a layer of a clear coat finish over each label.

.7 Panelboard identification is to be arranged as follows: "WING-C-LP-A-1" where:

.1 "WING" denotes building wing;
.2 "C" denotes floor of wing;
.3 "LP" denotes panelboard type;
.4 "A" denotes panelboard number;
.5 "1" denotes a sub-fed panelboard of same number.

.8 Building wings for panelboard identifications to be confirmed with Consultant prior to start of work.

.9 Building floors for panelboard identifications to be indicated as follows:

.1 "B" or "C" denotes Basement or Concourse where applicable to match installation;
.2 "G" denotes Ground Floor;
.3 1 to 10 denotes Floors 1 through 10.

.10 Panelboard types are to indicate service as follows:

.1 "DP" denotes "Distribution Panel" that feeds various branch circuit panels and larger loads;
.2 "LP" denotes "Lighting Panel" for lighting and general receptacle loads;
.3 "PP" denotes "Power Panel" for multiple loads within a specific area such as a shop;
.4 "VP" denotes "Vital Panel" for designated Critical Patient Care Area loads;
.5 "KP" denotes "Kitchen Panel" for equipment loads within kitchen.

.11 Where panelboards are supplied from Emergency Power, panelboard type to be proceeded by letter "E", i.e. "EDP", "ELP", "EPP", "EKP", etc.

.12 Nameplates to be mechanically secured lamacoid and be colour coded as follows:

.1 Normal Power Black with white letters;
.2 Emergency Power Red with white letters;
.3 Isolated Power Red with white letters;
.4 Vital Power Yellow with white letters;
.5 UPS Power Orange with white letters.

.13 Above identification nameplate and nomenclature requirements are for typical requirements for pricing only.

.14 In pull boxes, junction boxes and at terminations, identify feeders by use of plastic plates indicating system voltage and circuit designations. Plates to be 25 mm (1") in diameter and have letter stamped 9 mm (5/8") high. Colour coding to be:

.1 Phase A – red;

.2 Phase B – black;
.3 Phase C – blue;
.4 Neutral – white;
.5 Ground - green.

.15 Confirm print size type and size, colours, sizing and nomenclature of nameplates with Consultant prior to ordering. Submit sample board.

## 3.11 INSTALLATION OF TERMINAL BACKBOARDS

.1 Provide specified terminal backboards for communication systems and electrical distribution equipment.

.2 Securely wall mount each backboard with proper fasteners to suit wall construction.

.3 Unless otherwise noted, size backboards to sufficiently provide adequate terminal space for each system, plus 20% space for future additions.

## 3.12 INSTALLATION OF WARNING SIGNS

.1 Provide warning signs as applicable for following:

.1 on doors into transformer vaults;
.2 on doors into high voltage switchgear rooms;
.3 on doors to genset room;
.4 on doors into main electrical rooms;
.5 for other applications as noted.

.2 Secure signs to equipment with stainless steel screws. Number of signs required and sign wording, symbols, and colours to be approved by Owner and reviewed with Consultant, and local electrical utility, where applicable.

## 3.13 BRANCH CIRCUIT BALANCING

.1 Connect branch lighting and power circuits to panelboards so as to balance actual loads (wattage) within 5%. If required, transpose branch circuits when work is complete to meet this requirement.

.2 At request of Consultant, perform necessary tests to show compliance with above requirement. Make such tests after building is occupied.

## 3.14 DISCONNECTION, REMOVAL AND RELOCATION WORK

.1 Where indicated on drawings or where required to perform Work of this Project, disconnect and remove items of existing obsolete electrical work. Relocate required devices as required to accommodate work of other Divisions. Where luminaires, switches, receptacles, and other devices and/or equipment is removed, disconnect at point of electrical supply, remove obsolete wiring and conduit up to source, unless otherwise noted, and make system safe to Owner's satisfaction and as reviewed with Consultant. Remove obsolete conduit/raceways in accessible ceiling spaces, exposed locations, etc. Where existing obsolete conduit and similar raceway material cannot be removed, such as embedded in concrete, cut back and cap obsolete conduit and raceways. Refer to specific notes on drawings.

.2 When respective work is deleted, such deletions are to in no way affect operation of any existing interconnected mechanical or electrical components that remain. When existing circuits are being disconnected, maintain supervision of area to ensure that such circuits do not affect essential existing circuits being retained.

.3 Refer to architectural drawings which define extent of areas being demolished in existing building. Review drawings and site and include for demolition and/or renovation of services as required to accommodate alterations detailed.

.4 Unless otherwise noted, obsolete materials which are removed and are not to be relocated or reused are to become your property. Remove from site and properly dispose. Obtain from Owner and review with Consultant, a list of existing electrical items which are to be removed and turned over to Owner. Said items are to remain property of Owner.

.5 Where existing services pass through or are in an area to serve items which are to remain, or pass through areas that are to be deleted, maintain services, but re-route as required. Include for rerouting existing services concealed behind existing finishes and which become exposed during renovation work, so as to be concealed behind new or existing finishes. Confirm with Owner services which are to be kept in service and operational.

.6 Revise panelboard directories accordingly, if affected by any renovation, disconnection, or removal of work. Use Owner's actual room names/numbers.

.7 Protect existing devices being relocated or deleted to ensure that they are not damaged. Test such devices prior to disconnection and de-energization, to ensure that each device is in proper working condition. Ensure that motors are in proper rotation direction. Examine each device for damage. Report devices not working or with damage to Consultant prior to initiating any work. It will be assumed that devices are in proper working order and good condition if not reported.

.8 Provide junction boxes, outlet boxes, wiring, plates, etc., as necessary for complete relocation of devices. Clean relocated or temporary removed devices and equipment, and ensure that they are in good operating condition before being reinstalled. Where existing luminaires are relocated, clean luminaires and inspect for damage. Relamp relocated luminaires. Report defects or damages to Consultant. Do not splice conductors unless approved by Owner and reviewed with Consultant. Utilize junction boxes and terminal devices for proper extension of circuits where approved. Otherwise replace circuits with home run continuous run of suitable lengths.

.9 Provide blank coverplates on existing obsolete boxes which are to remain in position.

.10 After installation is complete, test parts of re-used or relocated electrical equipment and correct faults and grounds. Include for fire alarm verification company to verify any relocated devices and downstream affected devices, and verify system as required by local fire authority to suit actual relocation work. For other existing systems, engage manufacturers authorized representative or Owner's system maintenance contractor, to inspect and verify relocated devices. Review exact requirements with Owner and Consultant. Document testing in test reports, signed by testing technician. Submit copies to Consultant.

.11 Interior, exterior or underground electrical services (including auxiliary services, telephone, fire alarm, P.A. System, etc.) to operating parts of building are not to

be hampered under any conditions and to that effect, necessary work may have to be carried out on an overtime basis, at no additional cost to this project. Existing risers are to be maintained in service as required to feed other areas of building(s). Do not interrupt any services without prior written approval by Owner and review with Consultant. Submit formal requests to Consultant outlining in detail requirements of proposal and wait for instructions from Consultant.

.12 Be present when new doors or openings are being cut into existing walls and ceilings. Should any damage occur to electrical system, restore system to a safe and sound condition.

.13 Where references are made on drawings that existing receptacles, etc., be extended and/or relocated to suit new construction, receptacles, etc., are to be tested and if found defective, be replaced with new devices. Cracked or broken cover plates are to be replaced and match Architectural finishes. Contractor may optionally replace existing basic receptacles, switches, and faceplates with devices matching existing devices.

.14 Be responsible for disconnecting power supply to branch circuits controlling lighting, receptacles, panels, mechanical equipment, etc., for safe removal of equipment, conduit, wiring, boxes, etc., affected by demolition.

.15 Close openings in boxes, panels, etc., that result from removal of equipment, conduit, wiring, fixtures, etc. Close openings in a proper manner and properly terminate and insulate cables to restore system to a safe operating condition, to Consultant's satisfaction.

.16 Be present and supervise removal of electrical equipment, P.A. speakers, etc., during demolition of ceilings, walls, floors, etc. Existing equipment which is not to be relocated but interferes with demolition, are to be temporarily relocated until demolition work is completed. Services to temporarily relocated equipment are to be maintained at all times.

.17 Remove and re-install existing ceiling tiles as required to perform work. Prior to removal, inspect tiles for damage and report any to Owner and Consultant. Any loose cabling is to be secured, and luminaires additionally supported with cables secured to ceiling slab. After work has been completed and successfully inspected, re-install ceiling tiles to existing standards and re-install devices. Be responsible for replacement of tiles and grid members damaged during work of Electrical Division. Comply with applicable governing authority requirements with regards to ceiling work in special areas.

.18 Where existing surfaces are damaged by Electrical Divisions work and/or where existing devices are removed from wall, ceilings, floors and other surfaces, and such deleted devices are not being replaced in same locations, patch locations of these removed devices and re-finish. Patching and finishing is to be provided by tradesmen skilled in particular trade or application worked on, to Owner’s approval and review with Consultant. Where openings are left in existing ceiling tiles, replace ceiling tiles with new matching tiles approved by Owner and reviewed with Consultant. Unless otherwise included for in other Divisions, include for:

.1 preparing existing surfaces to be filled and repainted to be cleaned as required to remove dirt, dust, oil, grease, loose paint, rust and any other foreign matter which would prevent proper bonding of new finish; sand glossy surfaces to uniform dull texture;

.2 filling in and patching surfaces with same material as existing surfaces; finished surfaces to match and line with existing adjoining surfaces;

.3 providing fire stopping materials to maintain fire rating of the existing surfaces; refer to specification article entitled - Firestopping and Smoke Seal Materials.

.4 using paint rollers and/or brushes to apply and extend paint finish over full height and/or width of area affected, to a straight line in location reviewed with Consultant;

.5 applying sufficient number of coats such that patched area is indistinguishable to surrounding area;

.6 materials used to be of equivalent quality to existing finishes standards and be compatible with finishes to which they are applied;

.7 finishes to be approved by Owner and reviewed with Consultant.

.19 Check luminaires to be deleted for PCB ballasts. Disconnect and remove such ballasts. As specified previously, include for company specialized in such hazardous materials to remove and dispose such materials off-site in compliance with Ministry of Environment, Ministry of Transport and any other governing authority regulations.

.20 If at any time during course of building work, asbestos containing materials are encountered or suspected, cease work in area in question and immediately notify Consultant. Comply with local governing authority regulations. Do not resume work in affected area without approval from Owner and review with Consultant.

## 3.15 INTERRUPTIONS TO AND SHUT-DOWNS OF SERVICES AND SYSTEMS

.1 Shutdowns and interruptions to existing systems and services are to be coordinated fully with and performed at times acceptable to Owner and reviewed with Consultant. Generally, shutdown may be performed only between hours of 12:00 midnight Sunday until 6:00 a.m. Monday morning. Include for costs of premium time to perform work during nights, weekends or other times outside of normal working hours, which may be necessary to comply with stipulations specified herein this Article. Services for operation of existing non-renovated areas of building are to be maintained.

.2 Upon award of contract, submit to Consultant for review and approval, a list of anticipated shut-down times and their maximum duration.

.3 Prior to each shut-down or interruption, inform Consultant and Owner in writing minimum 5 working days in advance of proposed shut-down or interruption and obtain written consent to proceed. Do not shut down or interrupt any system or service without written consent. Note that shutdowns of some essential services may require additional advance notification time.

.4 Work associated with shut-downs and interruptions are to be carried out as continuous operations to minimize shut-down time and to reinstate systems as soon as possible. Prior to any shut-down, ensure that materials and labour required to complete work for which shut-down is required are available at site.

.5 Review with Consultant if any conductor/feeder is designated for special considerations and if designated as such and is to be interrupted, ensure that at least following preparations are met:

.1 provide a schedule of proposed feeders to be interrupted; propose one feeder at a time to be worked on per scheduled shutdown;

.2 provide a method of procedure for work;

.3 prepare above documentation and submit for review by Consultant at least fifteen working days prior to date of each proposed work;

.4 on day/night of proposed feeder work, advise Consultant of which feeder is to be worked on; review with Consultant requirements for witnessing work;

.5 de-energize feeders and perform work as per Consultant and Owner reviewed schedule;

.6 after feeders are re-routed, megger test each feeder.

.6 Where working in close proximity to "live parts" or inside energized panels or energized cubicles of switchboards/substations, provide protection "boots" over bussing and insulating mats to cover areas of exposed live parts.

## 3.16 EQUIPMENT BASES AND SUPPORTS

.1 Provide equipment bases and supports. Coordinate concrete pour for housekeeping pads and luminaire poles bases with Division 03. Ensure that applicable seismic restraint provisions are provided as per local governing building code.

.2 Secure floor mounted equipment in place on minimum 100 mm (4") high concrete housekeeping pads, minimum 100 mm (4") wider and longer than equipment base dimensions.

.3 Supply dimensioned drawings, templates, and anchor bolts for proper setting of equipment on bases and pads. Be responsible for required levelling, alignment, and grouting of equipment.

.4 Submit to Consultant for review, dimensioned shop drawings of structurally designed bases for support of large, heavy equipment. Indicate on shop drawings total weight of base, reinforcement, and equipment for which it is required.

.5 Perform work within formwork contractor’s schedule. Failure to meet formwork schedule will result in Electrical Division Contractor being responsible for providing concrete work including formwork and reinforcing steel, to standards of Division 03.

.6 Unless otherwise noted, support equipment suspended above floor level with suitable welded or bolted prime coat painted structural steel angles or channels bracketed to wall or secured by hanger rods.

## 3.17 CONCRETE WORK

.1 Unless otherwise noted, concrete required for electrical work is to be provided as part of Work of Division 03. Coordinated exact requirements (sizes, locations) with General Trades Contractor.

.2 Layout, mark, coordinate and work with Division 03 contractor as required for installation of concrete necessary for duct banks, housekeeping pads, cubed openings, etc.

## 3.18 EXCAVATION AND BACKFILL

.1 Unless otherwise noted, excavation and backfill work required for electrical work is to be done as part of work of Division 02 or 31, except for final hand grading work and backfill to 450 mm (18") above service which is to be done as part of electrical work. Mark out location and routing of excavation required for work as well as required depth. Ensure that bedding is graded to provide proper drainage for ducts as reviewed with Consultant.

.2 Inverts and locations of existing site services may have been site surveyed and approximate location may be shown on drawings. Confirm that local utilities have performed locates and marking out. Ensure inverts and locations are correct, prior to commencement of work. Where discrepancies are found, immediately inform Consultant, and await direction.

.3 Ensure that work is inspected by Consultant before covering and backfilling. Failure to do so prior to backfilling will require re-excavating work and re-backfill at no additional cost to Owner.

## 3.19 CUTTING, PATCHING AND CORE DRILLING

.1 Unless otherwise noted, General Trades Contractors are responsible for cutting, patching, and core drilling of existing building required for installation of Work.

.2 Where added conduits and/or conductors penetrate existing construction, identify, and mark out locations for openings. Size openings to leave 13 mm (1/2") clearance around conduit and/or conductors. Coordinate work with General Trades Contractor.

.3 Ensure that openings in fire rated construction are sealed as per requirements of article entitled "Firestopping And Smoke Seal Materials" specified herein this Section and as per Division 07, as applicable.

.4 Fire stop and seal openings as specified, and patch as required before end of workday. No openings are to be left open overnight unless approved by Owner and reviewed with Consultant.

## 3.20 FINISH PAINTING OF ELECTRICAL WORK

.1 Unless otherwise noted, finish painting of exposed Electrical Divisions work is to be performed as part of work of Division 09.

.2 Provide identification painting for electrical distribution equipment in accordance with application requirements of Division 09. Review exact finish colours with Consultant. Equipment requiring special colour identification painting to include but not be limited to following:

.1 pull boxes and junction boxes;
.2 communication system conduit;
.3 genset exhaust piping.

.3 Spray painting is not permitted unless approved in writing by Owner and reviewed with Consultant.

## 3.21 PROVISIONS FOR FURNITURE SYSTEMS

.1 Ensure that rough-in for electrical devices including but not limited to outlets, switches, thermostats, control devices, fire alarm devices and clocks and communications devices are located to avoid wall mounted systems furniture wall strips. Relocate conduit and devices which do not coordinate with systems furniture requirements identified on systems furniture drawings.

.2 Coordinate location of electrical conduits/ducts within floor slabs and mounted to underside of floor slabs, with location of free standing work stations and furniture systems.

.3 Coordinate connection of electrical and communication devices with systems furniture supplier. Generally, supply and installation of power, data and communication wiring and devices are by Electrical Division. Furniture system connection "whips" to be supplied by furniture system vendor and turned over to Electrical Division for installation. Confirm responsibility of supply of whip with General Trades Contractor. Power conductors are to be installed to a wall/ceiling mounted junction box and extended out to furniture system, through empty conduit, raceways, and back boxes provided within furniture system. Branch circuit conductors in furniture system raceways may be AC-90 flexible armoured conductors. Telecommunication (data/voice) conductors are to be complete home runs from LAN closet to work station outlet. Testing and verification of furniture system devices is responsibility Electrical Division. Confirm exact requirements with furniture system trades. Where furniture systems are not supplied with pre-wired devices, be responsible for supply, installation and wiring of required devices.

## 3.22 CONDUIT PROVISIONS FOR MISCELLANEOUS SYSTEMS

.1 Provide following components to accommodate future installation of various miscellaneous systems by system installers who are to provide equipment and wiring:

.1 conduit - diameters as sized on drawings with non-metallic fish wires or pull cords and suitable bushings for conduit terminations, and as specified in Part 2; provide labelling at each end to clearly identify each conduit run with respect to system and path;

.2 outlet boxes - standard galvanized steel, each complete with a blank type faceplate, and as specified in Part 2;

.3 pull boxes, junction boxes, back boxes and sleeves - and as specified in Part 2.

.2 Miscellaneous systems are typically as shown on drawings. Unless otherwise noted on drawings, provide dedicated conduit runs for each system. Coordinate sizes of boxes with respective system vendors to ensure proper sizing to

accommodate components and that allows for wiring bending radii. Confirm conduit and box requirements also with system vendors.

.3 Provide pullboxes in conduit runs longer than 30 m (100') or having more than two -90 bends. Size pullboxes to be at least 8 times entering conduit in length. Pullbox sizes to comply with respective system standards.

.4 Leave conduits free and clear of all obstructions and terminate as required. Equip terminations with bushing, and clearly identify each run. Provide fish wires in all empty conduits. Run telecommunications conduits to comply with separation from sources of electromagnetic radiation as per standard ANSI/TIA/EIA-569. Site bend telecommunications conduit elbows to comply with system conduit bending radii requirements.

.5 Review exact requirements and locations of equipment with Consultant and respective system installers prior to roughing-in.

.6 Refer to system riser diagrams on drawings.

.7 Quantities for outlets to be as per floor plan drawings and not riser diagrams.

## 3.23 DOOR HARDWARE

.1 Generally, Division 08 or another Division not under scope of Electrical Contractor, is responsible for supply and installation of door alarm contacts, door holders, electric strikes, electromagnetic locks, door operator controls, power supplies, door controllers, central electromagnetic lock release controller and other door hardware. Coordinate and confirm with General Trades Contractor and respective equipment vendors (door hardware / security) exact responsibility of each Division of the Work.

.2 Confirm product and wiring requirements, back box requirements and wiring installation requirements with door hardware trades and with equipment vendors. Provide required wiring in conduit from each device to respective controllers, between each device, and to central control panel and for power connection to such controls and devices. Provide line level voltage power feeds to equipment as required.

.3 For controls and interconnections between devices, when such device terminations are responsibility of others, supply and run interconnecting wiring in conduit to devices and allow spare length of 1.8 m (6') coiled wiring at each end for final termination to devices by others.

.4 For applications of electro- magnetically held closed doors, engage fire alarm system vendor to provide fire alarm type pull station with auxiliary contacts as required for interconnection of electro- magnetic door hardware and fire alarm system for release of doors. Provide required wiring in conduit and connections. Coordinate pull station requirements with fire alarm system vendor.

.5 Exact type of door alarm contacts to be coordinated with door construction and finishes. Contacts to generally be recessed mounted and wiring be installed in concealed conduits. Confirm exact requirements with door hardware/security vendor and General Trades Contractor.

.6 Where controls are located remotely from door locations, such as in closets, provide wiring in conduit and extend from local above door junction boxes and

devices as required with homeruns back to closet location of equipment and leave slack wiring for terminations by others. Confirm exact requirements with door hardware / security vendor and General Trades Contractor.

.7 Drawing details issued with electrical drawings are for pricing reference only and are based on assumptions. Obtain detailed design drawings from successful door hardware / security vendors and provide wiring in conduit to coordinate with and accommodate final systems designs. Coordinate with General Contractor.

.8 Submit as part of shop drawing submission, detailed responsibility matrix identifying work and responsibilities of each trade and required interconnections.

.9 After installation is complete, test and verify operation of components in coordination with General Contractor and door hardware vendor.

## 3.24 PROVISIONS FOR LEAD SHIELDING

.1 As part of scope of General Trades work, walls to be provided with lead shielding. Coordinate exact scope of work with General Trades Contractor and Consultant and be responsible for following:

.1 disconnection of electrical and communications system devices to accommodate lead shielding installation work;

.2 relocation/extension of back boxes and outlet boxes to accommodate work;

.3 provision of pull/junction boxes located in accessible ceiling space for existing conductors which are of insufficient length to suit device relocations; do not splice telecommunications cabling (structured data/voice cabling) if run is not sufficient length; replace with home run data/voice cabling; splicing of power conductors must be made by means recommended by cable manufacturers and reviewed with Consultant and approved by Owner; clearly identify each box to its purpose;

.4 maintain integrity of lead shielding; do not penetrate lead shielding unless method of procedure is approved in writing by Owner and reviewed with Consultant;

.5 existing wall mounted raceway to be relocated out from wall to accommodate installation of lead shielding; if necessary, provide additional raceways to match existing raceway;

.6 where existing devices are disconnected and that such devices are part of a telecommunication system or other such building system, engage respective system vendor’s authorized technician to provide required system programming, control work, testing and verification to ensure devices are left in proper operating order.

**END OF SECTION**

## PART 1 - GENERAL

### 1.01 SUBMITTALS

.1 Submit shop drawings for products and accessories.

## PART 2 - PRODUCTS

### 2.01 GENERAL POWER CABLES

.1 CSA approved, ULC labelled and certified. Unless otherwise noted, conductors to be copper and be suitable for applications as noted in governing local electrical code.

.2 "RW90" CSA certified, single copper conductor to CSA C22.2 No. 38, 600/1000 volts, maximum 90°C (194°F) conductor temperature, -40°C (-40°F) minimum installation temperature, X-link polyethylene (XLPE) insulation, colour coded.

.3 "RWU90" CSA certified, single copper conductor to CSA C22.2 No. 38, 1000 volts, maximum 90°C (194°F) conductor temperature, -40°C (-40°F) minimum installation temperature, extra thickness X-link polyethylene (XLPE) insulation suitable for wet and buried installations, colour coded.

.4 "AC90 ISO-BX" flexible armoured cable with "RW90" conductors with low temperature Exelene insulation and two additional solid copper bonding conductors (one bare, one insulated) and overall interlocked aluminium tape armour, to CSA C22.2 No. 51(R2004).

.5 Solid conductors to and including No. 10 AWG; stranded conductors in sizes larger than No. 10 AWG; branch circuit conductors constructed of 98% conductive copper; with minimum 1000 volt rating.

### 2.02 STANDARD CONTROL AND COMMUNICATIONS CABLES

.1 ULC listed and labelled, CSA certified to C22.2 No. 127, No. 18 AWG "TEW" thermoplastic insulated, solid copper wire rated for 600 volts service, and 105°C (220°F) conductor temperature, complete with required number of copper conductors and colour coding.

.2 Nexans, "Securex II", FAS 105, 300 volts, 105°C (220°F) conductor temperature rated fire alarm system flexible armoured cable with solid copper conductor, shielding, flame retardant PVC insulation and red colour outer overall jacket, ULC listed and labelled and CSA certified to C22.2 No. 208.

### 2.03 CONDUCTOR PULLING LUBRICANT

.1 IDI Electric (Canada) Ltd., "Ideal Yellow 77" or "Wire Lube" as required.

### 2.04 TECK CABLES

.1 Nexans, "Firex II Teck" cables as follows:

.1 certified to CAN/CSA C22.2 No.131, Type TECK 90 Cable;
.2 rated for outdoor, weather resistant and wet locations including direct burial applications;

.3 1000 V rated;
.4 Conductor: Bare, Soft drawn, Class B Compact or Compressed Stranded Copper conductors per ASTM;
.5 insulation: chemically cross linked thermosetting polyethylene (XLPE);
.6 bonding conductor (1/C Cable): Soft drawn bare copper;
.7 inner jacket: sunlight resistant PVC jacket tightly applied over assembly, to prevent slipping of core in a vertical position;
.8 armour: flexible interlocked aluminum armour, over inner jacket for mechanical protection;
.9 cable shall be shielded type teck cable;
.10 overall PVC jacket rated -40°C (-40°F);
.11 barrier tape over shield;
.12 terminations to suit specific applications.

.2 Acceptable manufacturers are:

.1 Nexans;
.2 Prysmian Cables (Pirelli);
.3 General Cable;
.4 Aetna Cables;
.5 Kerite Company.

## PART 3 - EXECUTION

### 3.01 PROJECT CONDITIONS

.1 If identified in documents, verify that field measurements and conditions are as identified.

.2 Cable routing on drawings is schematic and approximate. Route cable as required to meet project conditions. Determine exact routing and lengths on site.

.3 Confirm fire protection ratings of construction to ensure that rooms and paths of conductors are fire rated in accordance with local governing codes requirements. Include fire rated conductors as required to meet local governing codes requirements.

### 3.02 CO-ORDINATION

.1 Co-ordinate work with work provided under other electrical work and work of other trades.

.2 Determine required separation between cable and other work.

.3 Determine cable routing to avoid interference with other work.

.4 Submit any alternative cable routing to Consultant for review prior to proceeding with work.

### 3.03 INSTALLATION OF CONDUCTORS

.1 Provide required conductors. Ensure fire rated conductors are provided for applications as required by local governing codes, standards and local governing authorities.

.2 In applications where multiple conductors in conduit are being run, provide a trapeze configuration of metal C-channels and threaded rod hangers to support cable/conduit from ceiling slab. Wall mounted cable/conduit brackets and ring type conduit hangers may also be permitted in applications approved by Owner and reviewed with Consultant. Provide required cable support system accessories which are not specified herein or shown on drawings but are required for proper installation.

.3 Conductors, unless otherwise noted, to be as follows:

.1 underground inside or outside building and for non-climate controlled areas - "RWU90";

.2 for connections to electric heating coils in supply air ductwork systems, and for connections to other electric heating equipment where use of 90 degrees C. rated conductors are recommended by heating equipment manufacturer - "RW90";

.3 branch circuit wiring for patient care areas accessible suspended ceiling spaces consisting of drops down to luminaires - "AC90" flexible armoured cable ("BX"); (maximum 3 m (10') run permitted); flexible armoured cable (i.e. "AC90") is not permitted within walls of patient care areas";

.4 branch circuit wiring for non-patient care areas in accessible ceiling spaces and within stud wall construction consisting of drops down to luminaries and drops down stud walls to devices and in furniture systems - "AC90" flexible armoured cable ("BX") (maximum 6m (20') run permitted);

.5 for installation interior of pre-fabricated service consoles –"RW90" in flexible metallic conduit; or "AC90 ISO-BX" to code requirements; refer also to drawing notes;

.6 for climate controlled areas wiring except as noted above or specified elsewhere in Specification or as noted on drawings - "RW90".

.4 Support flexible armoured cable in ceiling spaces and in stud wall construction with steel 2 hole cable straps to "Code" requirements. Flexible armoured cables must run in a neat manner parallel to building lines. Utilize centralized conduit runs to maintain maximum permitted runs of flexible armoured cables as specified. Provide insulating grommet at cut ends of flexible armoured cable to protect conductor insulation.

.5 Low voltage conductors to typically be No. 18 AWG "TEW" except for use in fire alarm system applications, unless otherwise noted. Provide specified fire alarm cables for fire alarm system applications or security system applications as approved by Code and local governing authorities. Conductors not installed in conduit or raceways to be fire insulated rated in accordance with latest governing Code Flame Spread requirements.

.6 Generally, conductor sizes are indicated on drawings. Such sizes are minimum requirements and must be increased, where required, to suit length of run and voltage drop in accordance with applicable conductor voltage drop schedule appended to end of this Section. Conductors not sized or specified of type, to be sized and of type in accordance with requirements of local electrical code.

.7 Do not use conductors smaller than No. 12 AWG in systems over 30 volts, unless otherwise noted. Do not use conductors smaller than No. 6 AWG for exterior luminaire wiring unless otherwise noted.

.8 Colour code conductors throughout to identify phases, neutrals and ground by means of self-laminating coloured tape, coloured conductor insulation, or properly secured coloured plastic discs. Colours, unless otherwise noted, to be as follows:

.1 Phase A - red;

.2 Phase B - black;

.3 Phase C - blue;

.4 Ground - green;

.5 Neutral - white;

.6 Control - orange.

.9 When pulling wires into conduit use lubricant and ensure that wires are kept straight and are not twisted or abraised.

.10 Control conductors, in addition, to be numbered with Brady Ltd. or Electrovert Ltd. Z type markers.

.11 Colour code conductors for communications systems in accordance with system component manufacturer’s recommendations.

.12 Neatly secure exposed wire in apparatus enclosures with approved supports or ties.

.13 Install low voltage conductors in conduits, unless otherwise noted within Documents.

## 3.04 INSTALLATION OF TECK CABLES

.1 Provide cables as required for specific applications. Handle, install, and terminate in accordance with manufacturer’s recommendations and instructions and as herein specified.

.2 When pulling cable, apply pulling tension to conductor not in sheath of cable. Limit cable pulling tension to as recommended by cable manufacturer.

.3 Terminate cable in equipment with lugs and termination kits as per cable manufacturer’s instructions.

.4 Installation of cable splices and terminations to be made by personnel skilled in this type of work.

.5 Ground shielding as per cable manufacturer’s instructions.

.6 Take necessary precautions when handling cable on reel to ensure that no damage will result in uncoiling process.

.7 No splices are allowed unless justified by cable pulling tension calculations and approved in writing by Owner and reviewed with Consultant. Review locations of splices with Consultant.

**END OF SECTION**

**SECTION 26 05 19**
LOW VOLTAGE CABLES – APPENDIX

## VOLTAGE DROP SCHEDULES

### MAXIMUM BRANCH WIRING DISTANCE FOR 120 VOLT SYSTEM AT 2% VOLTAGE DROP

| WIRE SIZE | BREAKER SIZE (AMPERES) | 15 | 20 | 30 | 40 | 50 | 60 | 70 | 80 | 100 |
|---|---|---|---|---|---|---|---|---|---|---|
| | MAX LOAD AT 80% (AMPERES) | 12 | 16 | 24 | 32 | 40 | 48 | 56 | 68 | 80 |
| No. 12 | - | 16.8 | 12.2 | - | - | - | - | - | - | - |
| No. 10 | - | 25.9 | 19.0 | 12.9 | - | - | - | - | - | - |
| No. 8 | - | 39.6 | 30.4 | 20.5 | 15.2 | - | - | - | - | - |
| No. 6 | - | 62.4 | 47.2 | 32.0 | 23.6 | 19.0 | 16.0 | - | - | - |
| No. 4 | - | 99.0 | 73.1 | 50.2 | 38.1 | 30.4 | 24.3 | 21.3 | 19.0 | - |
| NO. 2 | - | | 114.3 | 77.2 | 57.9 | 47.2 | 38.8 | 33.5 | 28.9 | 22.8 |
| No.1 | - | - | - | 96.0 | 73.1 | 57.9 | 47.2 | 42.6 | 36.5 | 27.4 |
| No. 1/0 | - | - | - | - | 85.3 | 68.5 | 56.3 | 48.7 | 41.9 | 33.5 |
| No. 2/0 | - | - | - | - | 102.8 | 80.7 | 67.0 | 57.9 | 50.2 | 40.3 |
| No. 3/0 | - | - | - | - | - | 95.2 | 79.2 | 68.5 | 59.4 | 47.2 |
| No. 4/0 | - | - | - | - | - | - | 92.9 | 79.2 | 70.1 | 56.3 |
| 250 MCM | - | - | - | - | - | - | 102.8 | 86.8 | 76.2 | 60.9 |
| 300 MCM | - | - | - | - | - | - | - | 100.5 | 88.3 | 70.1 |

**Note:** Distances indicated in metres from panel to load for single phase.

**END OF APPENDIX**

## Part 1 General

### 1.1 SECTION INCLUDES

.1 Materials and installation for wire and box connectors.

### 1.2 REFERENCES

.1 Canadian Standards Association (CSA International)

.1 CAN/CSA-C22.2 No.18.4-15, Hardware for the Support of Conduit, Tubing and Cable.

.2 CAN/CSA-C22.2 No.18-98(R2003), Outlet Boxes, Conduit Boxes, Fittings and Associated Hardware.

.3 CSA C22.2 No.65-13, Wire Connectors.

.2 Electrical and Electronic Manufacturers' Association of Canada (EEMAC)

.1 EEMAC 1Y-2, 1961 Bushing Stud Connectors and Aluminum Adapters (1200 Ampere Maximum Rating).

.3 National Electrical Manufacturers Association (NEMA).

### 1.3 WASTE MANAGEMENT AND DISPOSAL

.1 Separate and recycle waste materials in accordance with Section 01 74 20.

.2 Divert unused wiring materials from landfill to metal recycling facility as approved by Consultant.

## Part 2 Products

### 2.1 MATERIALS

.1 All fixtures and Branch Circuit wiring joints, in junction and outlet boxes shall be made with CSA Certified Pressure Type connectors rated at 600 volts maximum (1,000 volts when enclosed in fixture or sign). Connector body shall consist of a cone-shaped coil spring insert, insulated with a colour-coded, flame-retardant shell which shall be knurled for easy grip and capable for use with an Electrician's Pliers.

.2 Fixture type splicing connectors to: CSA C22.2 No. 65, with current carrying parts of copper or copper alloy sized to fit copper conductors 10 AWG or less.

.3 Bushing stud connectors: to NEMA to consist of:

.1 Connector body and stud clamp for stranded and round copper conductors.

.2 Clamp for stranded or round copper conductors.

.3 Clamp for stranded ACSR conductors.

.4 Study clamp bolts.

.5 Bolts for copper conductors.

.6 Sized for conductors as needed.

.4 Clamps or connectors for armoured cable, aluminum sheathed cable, mineral insulated cable, or flexible conduit. As required to: CAN/CSA-C22 No. 18.

## Part 3 Execution

### 3.1 INSTALLATION

.1 Remove insulation carefully from ends of conductors and:

.1 Install mechanical pressure type connectors and tighten screws with appropriate compression tool recommended by Manufacturer. Installation shall meet secureness tests in accordance with CSA C22.2 No. 65.

.2 Install fixture type connectors and tighten. Replace insulating cap.

.3 Install bushing stud connectors in accordance with EEMAC 1Y-2 NEMA.

### 3.2 CLEANING

.1 Progress Cleaning: clean in accordance with Section 01 74 11 - Cleaning.

.1 Leave Work area clean at end of each day.

.2 Final Cleaning: upon completion remove surplus materials, rubbish, tools and equipment in accordance with Section 01 74 11 - Cleaning.

.3 Waste Management: separate waste materials for recycling reuse in accordance with Section 01 74 21 - Construction/Demolition Waste Management and Disposal.

.1 Remove recycling containers and bins from site and dispose of materials at appropriate facility.

**END OF SECTION**

## PART 1 - GENERAL

### 1.01 SUBMITTALS

.1 Submit shop drawings for products and accessories.

## PART 2 - PRODUCTS

### 2.01 BASIC MATERIALS

.1 Ground Conductors: Solid copper, insulated and bare to suit application and code requirements; and bond conductors.

.2 Ground Busbar: Solid copper busbar, predrilled for two-hole lug connections, of size of 50 mm x 9 mm x 900 mm (2" x 3/8" x 36"), for wall and backboard mounting using standoff insulators.

.3 Ground Connections:

.1 Above Grade or in Manholes: Compression type connectors; Exothermic connections permitted above grade if approved by Consultant.

.2 When making ground and bonding connections, apply a corrosion inhibitor to contact surfaces. Use corrosion inhibitor appropriate for protecting a connection between metals used.

.4 Miscellaneous ancillary components to complete grounding and bonding work to requirements of local governing electrical authority and codes.

## PART 3 - EXECUTION

### 3.01 GENERAL GROUNDING AND BONDING REQUIREMENTS

.1 Provide required grounding and bonding work in accordance with drawings, local governing electrical authority, governing authorities having jurisdiction and local governing electrical inspection authority. Provide local governing electrical utility's grounding requirements for stations, vaults and electrical rooms, as applicable. Confirm requirements with local governing electrical utility.

.2 Provide 50 mm x 9 mm x 900 mm (2" x 3/8" x 36") electrical grade copper ground bus on perimeter wall of electrical rooms, 300 mm (12") above finished floor level. Secure ground bus on 20 mm (3/4") standoff insulators. Connect electrical rooms ground grid with ground bus with minimum 3/0 copper ground conductor in conduit. Connect each electrical room perimeter ground electrode system back to main electrical room ground electrode with minimum No. 3/0 copper conductors.

.3 Ground and bond other equipment such as transformers, switchboards, panelboards, and similar metal work to perimeter ground bus. Provide minimum No. 3/0 insulated ground wire from ground bus in electrical rooms to switchboards, transformers, structure, floor, etc.

.4 Extend conductors to metal piping of main water service and connect ground conductor to street side of water meter. If piping is not metallic, make necessary connections as required by local governing electrical utility.

.5 Effectively bond metallic pipe services such as, gas mains, water mains, and dry risers, to main grounding terminal at their point of entry. Make connections to services with purpose-made grounding clamps.

.6 When buses are in place, bolts have been tightened, and lugs have been installed, coat entire installation with two (2) 100% covering coats of suitable shellac to prevent bus from oxidizing.

.7 Throughout complex, solidly ground systems and make required grounding connections to electrical devices and apparatus. Ground conductors to be insulated copper wire connected with approved fittings in accordance with local governing electrical code.

.8 Effectively bond building structures to main grounding system (grid).

.9 Provide separate insulated ground wire for each isolated ground receptacle.

.10 Extend isolated grounding conductors of computer receptacles to isolated ground bus of computer panel board serving area. From ground bus extend ground conductors to building grounding station.

.11 In areas of raised floor systems, provide copper ground system as sized and detailed on drawings and as per local governing electrical code requirements. Bond ground system to every third raised floor support using Burndy Inc., ground clamps, and connects system to building ground system in conduit. Bond every metallic conduit which penetrates raised floor to raised floor stringer system

.12 Connect grounding conductors to motors 10 hp and above or circuits 20A or above, with a solderless terminal and a bolt tapped to motor frame or equipment housing. Connect to smaller motors or equipment by fastening terminal to a connection box. Connect junction boxes to equipment grounding system with grounding clips mounted directly on box or with machine screws. Completely remove paint, dirt, or other surface coverings at grounding conductor connection points so good metal-to-metal contact is made.

.13 Ground metal sheathing and any exposed metal vertical structural elements of buildings. Ground metal fences enclosing electrical equipment. Bond any metal equipment platforms which support electrical equipment to equipment ground. Bond rooftop equipment.

.14 Bond metal work associated with pools such as reinforcing steel, piping, ladders, etc., above ground loops by copper conductors in accordance with local governing electrical code. Clean water pump prior to bond being using approved clamps. At your discretion, make several bonds at various locations or collect wires and make one (1) bond. Ensure that electrical equipment associated with these piping systems are grounded adequately by installing flexible conduit and ground jumper wire to motors. Ground telephone boxes, speakers, pull stations and other such equipment within pool area with jumper wires within connecting conduit to ensure proper grounding. Include for ground connections to pool reinforcing steel.

.15 Provide separate ground connection for bathtubs.

.16 Provide service conductors exceeding 400 amperes with minimum No. 3/0 AWG grounding conductors, unless otherwise noted.

.17 Ground and bond various telecommunications, audio visual systems, security, life safety and control systems in accordance with respective system manufacturers recommendations and in accordance with local governing electrical code requirements.

.18 Do not use conduit systems as ground conductors in patient care areas or in areas as per local governing electrical code requirements.

.19 Extend grounding from ground bus in isolated power units to ground busses within panelboard serving area. From ground bus extend ground conductors in PVC conduit which is located in a concealed space in a wall or in a concrete floor slab and connect to building grounding station as close as practical to station.

.20 Confirm exact method of executing grounding for isolated ground system with governing authorities. Generally, method to comply with CSA Standard Z32 and NFPA No. 56. Testing of grounding of isolated ground system to be performed by independent test company specified for “Distribution System Testing And Coordination Study" work.

.21 Make ground connections in slab or buried underground using local governing electrical authority approved welded copper connections.

.22 Provide minimum no. 3/0 AWG insulated copper ground conductors and LAN Room copper ground bus mounted on walls with standoff insulators in each LAN room. Connect ground bus to computer equipment racks and to building ground system.

.23 Ground conductors not sized on drawings are to be sized in accordance with local governing electrical authority requirements. Ground conductor size is to be no smaller than requirements specified herein this article or on drawings.

**END OF SECTION**

## Part 1 General

### 1.1 WASTE MANAGEMENT AND DISPOSAL

.1 Separate and recycle waste materials in accordance with Section 01 74 20.

.2 Remove from site and dispose of all packaging materials at appropriate recycling facilities.

.3 Collect and separate for disposal paper, plastic, polystyrene, corrugated cardboard, packaging material in appropriate on-site bins for recycling in accordance with Waste Management Plan.

.4 Divert unused metal materials from landfill to metal recycling facility as approved by Engineer.

.5 Fold up metal banding, flatten and place in designated area for recycling.

## Part 2 Products

### 2.1 SUPPORT CHANNELS

.1 U shape, size 41 x 41 mm, 2.5 mm thick, surface mounted or suspended.

## Part 3 Execution

### 3.1 INSTALLATION

.1 Secure equipment to solid masonry, tile and plaster surfaces with epoxy anchors.

.2 Secure equipment to poured concrete with expandable inserts.

.3 Secure equipment to hollow masonry walls or suspended ceilings with expandable inserts.

.4 Secure surface mounted equipment with twist clip fasteners to inverted T bar ceilings. Ensure that T bars are adequately supported to carry weight of equipment specified before installation.

.5 Support equipment, conduit or cables using clips, spring loaded bolts, cable clamps designed as accessories to basic channel members.

.6 Fasten exposed conduit or cables to building construction or support system using straps.

- .1 One-hole steel straps to secure surface conduits and cables 50 mm and smaller.
- .2 Two-hole steel straps for conduits and cables larger than 50 mm.
- .3 Beam clamps to secure conduit to exposed steel work.

.7 Suspended support systems.

- .1 Support individual cable or conduit runs with 6 mm dia threaded rods and spring clips.

.2 Support 2 or more cables or conduits on channels supported by 6 mm dia threaded rod hangers where direct fastening to building construction is impractical.

.8 For surface mounting of two or more conduits use channels at 1.5 m on centre spacing.

.9 Provide metal brackets, frames, hangers, clamps and related types of support structures where indicated or as required to support conduit and cable runs.

.10 Ensure adequate support for raceways and cables dropped vertically to equipment where there is no wall support.

.11 Do not use wire lashing or perforated strap to support or secure raceways or cables.

.12 Do not use supports or equipment installed for other trades for conduit or cable support except with permission of other trade and approval of Consultant.

.13 Install fastenings and supports as required for each type of equipment cables and conduits, and in accordance with manufacturer's installation recommendations.

.14 Provide channels for mounting of conduit, wiring and devices on walls of basements, mechanical rooms and attics.

.15 Provide spacers to prevent direct contact between 'U' channels and concrete.

.16 File rough edges of cut 'U' channels and paint with galvanized paint.

## 3.2 CLEANING

.1 Progress Cleaning: clean in accordance with Section 01 74 11 - Cleaning.

.1 Leave work area clean at end of each day.

.2 Final Cleaning: upon completion remove surplus materials, rubbish, tools and equipment in accordance with Section 01 74 11 - Cleaning.

.3 Waste Management: separate waste materials for recycling in accordance with Section 01 74 21 - Construction/Demolition Waste Management and Disposal.

.1 Remove recycling containers and bins from site and dispose of materials at appropriate facility.

**END OF SECTION**

## Part 1 General

### 1.1 REFERENCES

.1 Canadian Standards Association (CSA International).

.1 CSA C22.1-18, Canadian Electrical Code, Part 1, 27th Edition.

### 1.2 SUBMITTALS

.1 Provide submittals in accordance with Section 01 33 00.

.2 Product Data:

.1 Provide manufacturer's printed product literature, specifications and datasheet and include product characteristics, performance criteria, physical size, finish and limitations.

.3 Provide Shop Drawings: in accordance with Section 01 33 00.

### 1.3 DELIVERY, STORAGE AND HANDLING

.1 Waste Management and Disposal.

.2 Separate waste materials for reuse and recycling in accordance with Section 01 74 20.

## Part 2 Products

### 2.1 SPLITTERS

.1 Sheet metal enclosure, welded corners and formed hinged cover suitable for locking in closed position.

.2 Main and branch lugs to match required size and number of incoming and outgoing conductors as indicated.

.3 At least three spare terminals on each set of lugs in splitters less than 400 A.

### 2.2 JUNCTION AND PULL BOXES

.1 Construction: welded steel enclosure.

.2 Covers Flush Mounted: 25 mm minimum extension all around.

.3 Covers Surface Mounted: screw-on flat covers.

.4 Cast junction and pull boxes in basements and attics.

### 2.3 CABINETS

.1 Construction: welded sheet steel hinged door, latch and catch.

.2 Type E Empty: flush overlapping sides mounting as indicated.

.3 Type T Terminal: flush overlapping sides mounting as indicated containing 19 mm G1S plywood backboard

## Part 3 Execution

### 3.1 SPLITTER INSTALLATION

.1 Install splitters and mount plumb, true and square to the building lines.

.2 Extend splitters full length of equipment arrangement except where indicated otherwise.

### 3.2 JUNCTION, PULL BOXES AND CABINETS INSTALLATION

.1 Install pull boxes in inconspicuous but accessible locations.

.2 Mount cabinets with top not higher than 2 m above finished floor except where indicated otherwise.

.3 Install terminal block as required in Type T cabinets.

.4 Only main junction and pull boxes are indicated. Install additional pull boxes so as not to exceed 30 m of conduit run between pull boxes.

### 3.3 IDENTIFICATION

.1 Equipment Identification: to Section 26 05 00.

.2 Identification Labels: size 2 indicating system name voltage and phase.

**END OF SECTION**

## Part 1 General

### 1.1 REFERENCES

.1 Canadian Standards Association (CSA International).

.1 CSA C22.1-18, Canadian Electrical Code, Part 1, 27th Edition.

### 1.2 SUBMITTALS

.1 Provide submittals in accordance with Section 01 33 00.

.2 Submit samples for floor box in accordance with Section 01 33 00.

### 1.3 DELIVERY, STORAGE AND HANDLING

.1 Deliver, store and handle materials in accordance with Section 01 61 00.

.2 Waste Management and Disposal.

.1 Separate waste materials for reuse and recycling in accordance with Section 01 74 20.

## Part 2 Products

### 2.1 OUTLET AND CONDUIT BOXES GENERAL

.1 Size boxes in accordance with CSA C22.1.

.2 102 mm square or larger outlet boxes as required.

.3 Gang boxes where wiring devices are grouped.

.4 Blank cover plates for boxes without wiring devices.

.5 Combination boxes with barriers where outlets for more than one system are grouped.

.6 Vapour barrier preformed boxes in exterior walls, which contain R22.5 mineral wool between the metal studs and smart vapour barrier.

### 2.2 GLAVANIZED STEEL OUTLET BOXES

.1 One-piece electro-galvanized construction.

.2 Single and multi-gang flush device boxes for flush installation, minimum size 76 x 50 x 38 mm or as indicated. 102 mm square outlet boxes when more than one conduit enters one side with extension and plaster rings as required.

.3 Utility boxes for outlets connected to surface-mounted EMT conduit, minimum size 102 x 54 x 48 mm.

.4 102 mm square or octagonal outlet boxes for lighting fixture outlets.

.5 Extension and plaster rings for flush mounting devices in finished plaster or tile walls.

**2.3 MASONRY BOXES**

.1 Electro-galvanized steel masonry single and multi-gang boxes for devices flush mounted in exposed block walls.

**2.4 CONCRETE BOXES**

.1 Electro-galvanized sheet steel concrete type boxes for flush mount in concrete with matching extension and plaster rings as required.

**2.5 FLOOR BOXES**

.1 Concrete tight electro-galvanized sheet steel floor boxes with adjustable finishing rings to suit floor finish with brass faceplate. Device mounting plate to accommodate short or long ear duplex or single receptacles. Minimum depth: 73 mm for receptacles and communication outlets.

.2 Adjustable, watertight, concrete tight, cast floor boxes with openings drilled and tapped for 16, 21 and 27 mm conduit. Minimum size: 73 mm deep.

**2.6 CONDUIT BOXES**

.1 Cast FS or FD feraloy boxes with factory-threaded hubs and mounting feet for surface wiring of devices in basements, mechanical rooms and attics.

**2.7 FITTINGS – GENERAL**

.1 Bushing and connectors with nylon insulated throats.

.2 Knock-out fillers to prevent entry of debris.

.3 Conduit outlet bodies for conduit up to 35 mm and pull boxes for larger conduits.

.4 Double locknuts and insulated bushings on sheet metal boxes.

**2.8 SERVICE FITTINGS**

.1 ‘High Tension’ receptacle fitting made of 2-piece stainless steel or die-cast aluminum with brushed aluminum or satin aluminum housing finish for 1 single gang or 1 duplex or two duplex receptacles. Bottom plate with two knockouts for centred or offset installation. 1 x 102 mm extension piece as required.

## Part 3 Execution

**3.1 INSTALLATION**

.1 Support boxes independently of connecting conduits.

.2 Fill boxes with paper, sponges or foam or similar approved material to prevent entry of debris during construction. Remove upon completion of work.

.3 For flush installations mount outlets flush with finished wall using plaster rings to permit wall finish to come within 6 mm of opening.

.4 Provide correct size of openings in boxes for conduit and armoured cable connections. Do not install reducing washers.

.5 Vacuum clean interior of outlet boxes before installation of wiring devices.

.6 Identify systems for outlet boxes as required.

.7 In exterior walls, which contain R22.5 mineral wool between the metal studs and smart vapour barrier, install vapour barrier preformed boxes.

**END OF SECTION**

## Part 1 General

### 1.1 REFERENCES

.1 Canadian Standards Association (CSA International).

.1 CAN/CSA-C22.2 No. 18-98(R2003), Outlet Boxes, Conduit Boxes, Fittings and Associated Hardware, A National Standard of Canada.

.2 CAN/CSA-C22.2 NO. 18.1-13, Metallic Outlet Boxes.

.3 CAN/CSA-C22.2 NO. 18.2-06(R2016), Non-metallic Outlet Boxes.

.4 CSA C22.2 No. 45-M1981 (R2003), Rigid Metal Conduit.

.5 CSA C22.2 No. 56-17, Flexible Metal Conduit and Liquid-Tight Flexible Metal Conduit.

.6 CSA C22.2 No. 83-07(R2017), Electrical Metallic Tubing.

.7 CSA C22.2 No. 211.2-06(R2016), Rigid PVC (Un-plasticized) Conduit

### 1.2 SUBMITTALS

.1 Provide submittals in accordance with Section 01 33 00.

.2 Product data: submit manufacturer's printed product literature, specifications and datasheets.

.3 Quality assurance submittals:

.1 Instructions: submit manufacturer's installation instructions.

### 1.3 WASTE MANAGEMENT AND DISPOSAL

.1 Separate waste materials for reuse and recycling in accordance with Section 01 74 20.

.2 Place materials defined as hazardous or toxic waste in designated containers.

.3 Ensure emptied containers are sealed and stored safely for disposal away from children Products.

## Part 2 Products

### 2.1 CONDUITS

.1 Rigid metal conduit: to CSA C22.2 No. 45, hot dipped galvanized steel threaded.

.2 Electrical metallic tubing (EMT): to CSA C22.2 No. 83, with expanded ends.

.3 Rigid PVC conduit: to CSA C22.2 No. 211.2.

.4 Flexible metal conduit: to CSA C22.2 No. 56, aluminum liquid-tight flexible metal.

### 2.2 CONDUIT FASTENINGS

.1 One-hole steel straps to secure surface conduits NPS 2 50 mm and smaller.

.1 Two-hole steel straps for conduits larger than NPS 2 50 mm.

.2 Beam clamps to secure conduits to exposed steel work.

.3 Channel type supports for two or more conduits at 1.2 m on centre.

.4 Threaded rods, 6 mm diameter, to support suspended channels.

**2.3 CONDUIT FITTINGS**

.1 Fittings: to CAN/CSA C22.2 No. 18, manufactured for use with conduit specified. Coating: same as conduit.

.2 Ensure factory "ells" where 90 degrees bends for NPS 1 27 mm and larger conduits.

.3 Watertight connectors and couplings for EMT.

.1 Set-screws are not acceptable.

.4 Steel coupling for life safety systems. Eg. Fire alarm, exit and emergency lighting.

**2.4 EXPANSION FITTINGS FOR RIGID CONDUIT**

.1 Weatherproof expansion fitting with internal bonding assembly suitable for linear expansion as per Ontario Electrical Safety Code 2018, 27th Edition, Section 12.

## Part 3 Execution

**3.1 MANUFACTURER’S INSTRUCTIONS**

.1 Compliance: comply with manufacturer's written recommendations or specifications, including product technical bulletins, handling, storage and installation instructions, and datasheets.

**3.2 INSTALLATION**

.1 Install conduits to conserve headroom in exposed locations and cause minimum interference in spaces through which they pass.

.2 Conceal conduits except in basements, mechanical and electrical service rooms and in unfinished areas such as attics.

.3 Use electrical metallic tubing (EMT) conduit for surface mounting except where specified elsewhere.

.4 Use electrical metallic tubing (EMT) except in cast concrete above 2.4 m, under slab and in inaccessible ceilings.

.5 Use rigid PVC conduit underground.

.6 Use flexible metal conduit for connection to motors in dry areas, transformers, connection to surface or recessed fixtures.

.7 Use liquid tight flexible metal conduit for connection to motors or vibrating equipment in damp, wet or corrosive locations.

.8 Minimum conduit size for lighting and power circuits: 21 mm.

.9 Bend conduit cold:

.1 Replace conduit if kinked or flattened more than 1/10th of its original diameter.

.10 Mechanically bend steel conduit over 21 mm diameter.

.11 Field threads on rigid conduit must be of sufficient length to draw conduits up tight.

.12 Install fish cord in empty conduits.

.13 Run three 27 mm spare conduits up to accessible ceiling space and two 25 mm spare conduits down to accessible ceiling space from each flush panel.

.1 Terminate these conduits in 152 x 152 x 102 mm junction boxes in ceiling space or in case of an exposed concrete slab, terminate each conduit in surface type box.

.14 Remove and replace blocked conduit sections.

.1 Do not use liquids to clean out conduits.

.15 Dry conduits out before installing wire.

.16 Use electrical non-metallic tubing (ENT) conduit embedded in concrete.

## 3.3 SURFACE CONDUITS

.1 Run parallel or perpendicular to building lines.

.2 Locate conduits behind infrared or gas fired heaters with 1.5 m clearance.

.3 Run conduits in flanged portion of structural steel.

.4 Group conduits wherever possible on surface channels.

.5 Do not pass conduits through structural members except as indicated.

.6 Do not locate conduits less than 75 mm parallel to steam or hot water lines with minimum of 25 mm at crossovers.

## 3.4 CONCEALED CONDUITS

.1 Run parallel or perpendicular to building lines.

.2 Do not install horizontal runs in masonry walls.

.3 Do not install conduits in terrazzo or concrete toppings.

## 3.5 CONDUITS IN CAST-IN-PLACE CONCRETE

.1 Locate to suit reinforcing steel.

.1 Install in centre one third of slab.

.2 Protect conduits from damage where they stub out of concrete.

.3 Install sleeves where conduits pass through slab or wall.

.4 Provide oversized sleeve for conduits passing through waterproof membrane, before membrane is installed.

.1 Use cold mastic between sleeve and conduit.

.5 Conduits in slabs: minimum slab thickness 4 times conduit diameter.

.6 Encase conduits completely in concrete with minimum 27 mm concrete cover.

.7 Organize conduits in slab to minimize cross-overs.

**3.6 CONDUITS IN CAST-IN-PLACE SLABS ON GRADE**

.1 Run conduits 27 mm and larger below slab and encase in 75 mm concrete envelope.

.1 Provide 50 mm of sand over concrete envelope below floor slab.

**3.7 CONDUITS UNDERGROUND**

.1 Slope conduits to provide drainage.

.2 Waterproof joints (PVC excepted) with heavy coat of bituminous paint.

**3.8 CLEANING**

.1 Proceed in accordance with Section 01 74 11.

.2 On completion and verification of performance of installation, remove surplus materials, excess materials, rubbish, tools and equipment.

**END OF SECTION**

## PART 1 - GENERAL

### 1.01 SUBMITTALS

.1 Submit as part of shop drawing submission, copies of:

.1 system and equipment testing reports;
.2 arc flash analysis report;
.3 copies of certificate of approvals from local governing inspection authorities.

.2 Submit electrical distribution system coordination study and short circuit calculations reports prior to or with proposed shop drawings of major electrical distribution equipment. Allow in shop drawing process, sufficient time for Consultant to review and make comments and for Contractor and equipment vendors to incorporate Consultant comments, necessary revisions and results of reports into equipment shop drawings. Do not order equipment until shop drawings have been reviewed with Consultant and Consultant's comments have been addressed. Time for this shop drawing review process will be at Consultant's discretion, but typically allow for 10 working days for initial review submission with additional 10 working days added to accommodate each resubmission.

.3 If formal completion of studies and reports may cause delay in equipment manufacture, direction from Consultant may be obtained for preliminary submittal of sufficient data to ensure that selection of device ratings and characteristics will be satisfactory. Subsequently, provide formal studies and reports to verify preliminary findings.

.4 Submit after completion of factory testing, copies of completed product testing reports.

.5 Submit after installation and testing, copies of:

.1 completed testing reports with completed test results sheets;

.2 certificate of approvals from local governing authorities, manufacturers' of systems and equipment and testing companies.

.6 Review form of submittals (submission procedures, number of hard copies and requirements for electronic copies) with Consultant at project start-up. For pricing assume minimum 3 hard coloured copies bound and electronic pdf copy.

## PART 2 - PRODUCTS

### 2.01 GENERAL SCOPE OF WORK

.1 Include for but not be limited to following:

.1 determining short-circuit current ratings to check that electrical distribution equipment can safely withstand level of fault current;

.2 preparing and submitting arc flash study with calculations for use in determining required electric shock and arc flash protection;

.3 product manufacturers providing equipment inspection, testing, start-up, adjustments and verification;

.4 electricians/trades people on site to handle equipment, make temporary connections, operate equipment and make repairs and adjustments and assist manufacturer's / testing organization's personnel during on-site inspection, testing, calibration, start-up, verification work and where supplementary commissioning;

.5 coordination of work with testing company and equipment/system manufacturer's authorized technician in performing adjustments and start-up procedures to equipment/systems;

.6 preparing testing reports and documentation for submission to Consultant.

## PART 3 - EXECUTION

### 3.01 GENERAL ELECTRICAL WORK TESTING

.1 In addition to tests required by local governing authorities having jurisdiction, local codes and regulations, perform following:

.1 after luminaires, switches, receptacles, motors, signals, etc., are installed, whether same are installed as part of this Division or by other Divisions (telephone systems excepted), test work to ensure that there are no leaks, grounds or crosses;

.2 establish and ensure proper motor rotation - measure full load running currents and check overload elements - report to Consultant any discrepancies which are found; existing motors which have been worked on (disconnected and reconnected) must be checked with rotation meter to ensure proper rotation; be responsible for any damage caused by reverse rotation;

.3 demonstrate to Consultant that branch circuit voltage drop is within specified units;

.4 ensure that devices are commissioned and operable.

.2 Document results into distribution system testing report. Report must state that testing was successful and Work complies with project documents, applicable CSA standards, and other applicable governing codes and requirements.

### 3.02 SYSTEMS INSPECTION, TESTING, START-UP AND VERIFICATION

.1 When each system and each major piece of equipment installation is complete and ready for acceptance, include for system and equipment manufacturer or manufacturer's authorized representative to visit site to provide system inspection, testing, start-up, and verification. Perform following:

.1 check component connections and overall installation;

.2 adjust sound systems for high quality, distortion free performance, free from noise, cross-talk, hum or other interference;

.3 test and adjust system and ascertain that components are as specified and ensure that products operate as designed;

.4 provide start-up procedures for systems and equipment;

.5 verify and certify system component operations;

.6 prepare, document and evaluate test results;

.7 authenticate test results with signature of authorized testing Engineer/Technician;

.8 check and verify nameplates;

.9 provide maintenance and operating instructions to Owner's personnel.

.2 Perform work properly documented, and in accordance with manufacturer's instructions and recommendations.

.3 Perform work under presence of Owner/Consultant/Commissioning Agent at times approved by Owner and reviewed with Consultant.

.4 Provide these requirements after each phase (as applicable) to allow Owner option to use area of phase of work. These requirements are also to be provided prior to applying for Certificate of Substantial Performance of the Work of project.

.5 Megger tests all new feeder cables after they have been installed in conduits. Megger testing shall be performed to NETA standards if manufacturer data is not provided and shall be tested from phase to phase and phase to ground. Provide test report to consultant as soon as testing is completed and repair any failed cables and re-test to satisfaction of the consultant.

.6 Include for manufacturers authorized technicians of equipment/systems integrated to equipment/systems being tested to be onsite during full integration testing. Coordinate with each manufacturer.

.7 When system inspection, testing, start-up and verification specified above is complete, obtain from supplier/manufacturer (or where specified, independent inspection company) a test report with test sheets, and covering verification letter signed by authorized testing technician, stating that system or equipment has been inspected and tested, performs as specified and is ready for acceptance. Include date and time of testing, testing technician's name and specification section number test fulfilled.

.8 Bind documents under cover and submit copies to Consultant.

## 3.03 ELECTRICAL DISTRIBUTION SYSTEM TESTING AND VERIFICATION

.1 Provide services consisting of on-site engineering inspection, testing and verification of electrical distribution equipment and other systems and equipment. Perform work to standards of applicable local governing authorities, local electrical inspection authority and CSA Standards.

.2 Services to be performed by an approved independent testing company and be initially conducted prior to system/equipment being energized and further testing when energized, and include following items, where applicable:

.1 testing, cleaning when necessary, and calibrating relays and circuit breaker trip devices (calibration of protective devices to conform to requirements of approved coordination curves);

.2 function test of associated control devices;

.3 replacement of fuses destroyed during testing;

.4 acceptance test in presence of Consultant;

.5 presence, for length of time required, of qualified and competent equipment manufacturer's service representative during start-up;

.6 carry out insulation resistance testing of outgoing feeders with respect to ground;

.7 inspection and testing of cables, bus duct, power panels, lighting panels, transformers, power receptacles and switches;

.8 inspection and testing of electrical system auxiliary systems and devices such as metering, power factor capacitors, UPS, isolated power centres, transfer switches, inverters, central battery systems, generators sets and load banks;

.9 inspection and testing of electrical devices and communication system components installed in service consoles, headwalls, furniture systems, etc., whether or not devices are supplied by Electrical Divisions;

.10 inspection and testing of motor control centres, starters and variable frequency drives;

.11 inspection and testing of lighting control systems including central control systems, low voltage relays, sensors and dimming controls; ensure that devices perform in conformance with ASHRAE 90.1 requirements;

.12 verification and certification work of equipment and systems;

.13 witness testing of EMI testing and verification (signing of report) of test results.

.3 Perform services procedures properly documented, and in accordance with manufacturer's instructions and recommendations.

.4 Submit copies of engineering and testing report to Consultant.

.5 Where relays, breakers, etc., do not perform to Consultant reviewed coordination curves, revise as part of work.

.6 Adjust and calibrate existing trip units, relays, breakers, etc., which do not perform to approved coordination curves. Where defective or incorrectly applied relays or breakers are found in existing distribution system, identify problem areas clearly on curves of test report and provide recommended course of remedial action. Where replacement of existing devices not identified in Documents to be replaced is necessary to provide coordination, submit estimate of costs to Consultant. Where directed by Owner, perform work at additional cost to Contract amount. Clearly show on coordination curves in report and clearly identify recommended remedial course of action.

.7 Test high voltage cable installation before placing in regular service. Work includes phase verification, grounding verification, hi-pot test of insulation strength

to IPCEA Specifications (Leakage Curves to be obtained), and time domain reflectometer tests to give records of cable impedance profiles to draw attention to cable damage. Reference cable manufacturers testing procedures and do not exceed maximum test voltage levels and durations.

.8 Testing organization to report high voltage cable defects directly to Consultant as soon as such defects are discovered. Re-test affected cables after proper repair. Also, re-test cables in cases where cable damage after installation is suspected. On completion of satisfactory testing of installation, submit a report by testing organization stating that cables concerned have satisfactorily passed required tests and are suitable for service. Submit copies of report to Consultant. Submit recorded test data (properly bound) with report, in each case.

.9 Test main power transformers before placing in regular service. Work to include voltage ratio test, phase angle test, insulation resistance, oil sampling (liquid type transformer), start-up and other manufacturer's recommended tests.

.10 Provide testing and coordination of emergency power distribution system to ensure that system performs in accordance to latest requirements of CSA Standard C282 and CAN/CSA Z32. Ensure that engine-generator set manufacturer and testing and coordination companies co-operate to ensure compliance with CSA requirements. Provide necessary adjustments and coordination to ensure that emergency power distribution system transfers essential loads to emergency power within required response time of loss of normal power.

.11 Test new receptacles within imaging suite and panel boards serving these spaces to the latest edition of CSA Z32. Provide test reports Consultants for review as soon as testing is complete.

.12 Provide visual and mechanical inspection of ground system and verify that it is in compliance with issued documents and local governing electrical code requirements.

.13 Additionally, perform testing of lighting control systems and devices to ensure conformance with ASHRAE 90.1 requirements.

.14 Document testing, coordination study and arc flash analysis in a report signed by a Professional Engineer licensed in the Place of Work and authorized by testing company. Submit copies of report to Consultant. Report to include test results with properly plotted curves, identified trouble areas of coordination, extensive comments regarding test results and recommendations on best course of remedial action.

.15 Acceptable companies to provide this work are to be independent of successful manufacturers providing distribution system equipment and include:

.1 G.T. Woods;

.2 Eaton Electric Services Division;

.3 Schneider Electric Services Division;

## 3.04 BRANCH CIRCUIT WIRING TESTING FOR PATIENT CARE AREAS

.1 Provide on-site engineering inspection and testing of branch circuit wiring and branch circuit devices in patient care areas in accordance with CSA Standard Z32.

.2 Patient Care Areas include applicable critical patient care, intermediate patient care and general patient care areas of renovated and additional areas.

.3 Branch circuit wiring testing to be performed by an approved independent testing company and be executed immediately upon energizing system prior to occupancy of an area by Owner.

.4 Thoroughly review requirements of CSA Standard and ensure that entire scope of branch circuit wiring to be tested is understood by testing company.

.5 Testing to be witnessed by Owner and Consultant. Notify Owner and Consultant in writing minimum of 7 working days in advance of proposed testing date.

.6 Document testing in distribution system testing report and submit copies to Consultant.

.7 Acceptable testing companies are as those listed for distribution system testing work.

## 3.05 SHOCK AND ARC FLASH PROTECTION

.1 Provide for electric shock and arc flash protection as required by local governing electrical code and local governing authorities. Scope of work to be for additional and revised equipment and first level of upstream devices.

.2 Prepare study to determine severity of potential exposure, planning safe work practices and selecting personal protective equipment under general guidelines of governing edition of CSA Z462.

.3 Design safety signs and labels for applications to equipment under general guidelines of ANSI Z535.4.

.4 Determine arc flash hazard distance and incident energy that workers may be exposed to from electrical equipment under general guidelines of IEEE 1584.

.5 Incorporate documentation with distribution system and coordination study report.

.6 Provide labels as required on equipment, meeting applicable standards and codes, to standards of local governing authorities and as reviewed with Consultant.

.7 Acceptable companies to provide this work are to be successful manufacturer of electrical distribution system equipment and include:

.1 Eaton Electric Services Division;
.2 Schneider Electric Services Division;
.3 G.T. Woods

## 3.06 INFRARED SCANNING

.1 Provide infrared scanning of Work and connections to electrical distribution equipment as noted.

.2 Infrared scanning process to include but not be limited to following:

.1 use of latest technology infrared fast scanning thermal imaging camera with colour digital conversion thermographic imaging capabilities; camera to be capable of determining temperature differences using generated isotherms;

.2 scanning distribution system with ability to detect 1°C between subject area and reference at 30°C;

.3 equipment to detect emitted radiation and convert detected radiation to visual image;

.4 infrared surveys to be performed during periods when equipment is under intended full operating load;

.5 perform scanning of essential power equipment when gensets are in operation and essential power is on line.

.3 Some guidelines for interpretation of temperature gradients are:

.1 temperature gradients of 3°C to 7°C indicate possible deficiency and warrant investigation;

.2 temperature gradients of 7°C to 15°C indicate deficiency; required repair as time permits as directed by Consultant;

.3 temperature gradients of 16°C and above indicate major deficiency; requires repair immediately.

.4 Document testing in a report signed by a Professional Engineer licensed in the Place of Work and authorized by testing company. Submit copies of report to Consultant. Report to include but not be limited to include:

.1 indication of problem area (location of "hot spot");
.2 indication of temperature rise between "hot spot" and normal or reference area;
.3 indication of cause of heat rise;
.4 indication of phase unbalance, if present;
.5 indication of areas scanned;
.6 colour photographs and thermograms of deficient area as seen on imaging system;
.7 summary of work;
.8 list of test equipment;
.9 faults, corrections required, recommendations;
.10 retesting of corrected faults.

.5 Acceptable infrared scanning companies:

.1 Eaton Canada;
.2 Siemens Canada;
.3 GT Wood;

.4 Pelikan Inc.

**END OF SECTION**

## PART 1 - GENERAL

### 1.01 SUBMITTALS

.1 Submit copies of following as applicable to work:

.1 waste tracking procedure;
.2 testing reports;
.3 completed test results sheets;
.4 certificate of approvals;
.5 identification of waste treatment facility proposed and description of type of waste that facility is licensed to handle;
.6 description of closure plan of facility;
.7 copies of insurance and bonding;
.8 certificates of destruction.

## PART 2 - PRODUCTS

### 2.01 HAZARDOUS MATERIALS

.1 Hazardous materials and infectious materials are known to be present on site in existing buildings, including but not limited to following:

.1 aspergillus;
.2 mould;
.3 asbestos;
.4 Polychlorinated biphenyls (PCBs);
.5 lead;
.6 mercury.

.2 Division 00 and/or Division 01 identify additional specific requirements and if such materials are present, include for costs to be educated and trained on special working conditions, to work in areas with hazardous materials, requiring protective clothing, gear, tenting, enclosures, etc., and performing necessary partitioning/tenting/ventilation work to isolate areas and maintain disturbances of such material to a minimum. Comply with infection control requirements and requirements of Health and Welfare governing authority requirements. An asbestos abatement report is available for review from Consultant. Unless otherwise noted, any abatement removal will be responsibility of another Division of Work or is not included under scope of work of this project.

.3 If proper abatement procedures are not followed, be responsible for bearing full cost of a full time qualified abatement inspector chosen by Owner. In areas where work is being done above or below an area occupied by Owner’s staff and/or building occupants, any slab penetrations into vertically adjacent occupied space to utilize a proper enclosure in area of that work on that occupied floor. Be responsible for failure to comply with special requirements in working in areas of hazardous materials.

.4 Include for company specializing in removal and disposal of materials containing polychlorinated biphenyls (PCBs) to disassemble equipment as required to access material containing PCBs, and remove and properly dispose of such material off site. Any luminaire being deleted to be checked for ballast containing PCBs and such ballasts to be disconnected and disposed off-site. Only companies that are certified and comply with Ministry of Environment and Ministry

of Transport regulations with regards to hazardous waste materials to be used to perform this Work. Prior to start of Work, submit to Consultant a copy of PCB disposal certificate and identification of Ministry authorized and designated disposal site. Lamps containing mercury (fluorescent lamps) to be removed and transported to a government approved disposal site.

## 2.02 PCB REMOVAL, TRANSPORTATION AND DISPOSAL

.1 General:

.1 Provide a specialty contractor experienced and certified in province of Work (Ontario), to perform polychlorinated biphenyls PCBs abatement removal work and approved by Ministry of Environment (MOE), to provide removal work of existing transformers and associated cables containing PCBs. Work to include but not be limited to following:

.1 disconnection and decommissioning of transformers;

.2 properly draining of PCB containing liquid;

.3 dismantling and cutting–up of transformers to allow for removal from site;

.4 proper packaging of PCB containing and contaminated materials to allow for removal from site;

.5 removal from site of materials and transportation of PCB containing materials to a Ministry approved designated site (identify site in shop drawing submissions);

.6 work performed to Ministry Of Environment and Transport Canada requirements, including proper permits, approvals and fees;

.7 submission to Consultant of detailed report of work, including copies of permits, certificate of approvals and identification of site where materials are to be delivered; submit these details as shop drawings prior to start of Work;

.8 remove materials from site and properly dispose of in manner approved by local authority having jurisdiction; identify in shop drawings proposed route and means for moving materials from building.

.2 Include additionally for administering, supervising, arranging, and coordinating of work and for disconnection and making safe of connections (primary and secondary power cabling, controls and protection circuits, monitoring circuits) to existing transformers. Replace any connectors and wiring that have come into contact with PCBs.

.3 Prior to start of Work, obtain approval from Consultant of path of egress for existing transformers and components. Ensure that such egress is protected from spills and other damage that may occur in movement of material.

.4 Perform Work at scheduled times approved in writing by Consultant and Owner.

.5 Be responsible for removing existing PCB liquid filled power transformers off site. Perform work required for inspecting, characterizing packaging, labelling, loading, transportation and destruction of PCB material.

.6 Remove waste in an expedient manner in accordance with agreed project schedule.

.7 Supply final Certificates of Destruction For All Waste (solid/liquid) to Consultant no later than 30 days after PCB waste is removed from site.

.8 Ensure that people involved in handling, loading, transportation and destruction of PCB Material are appropriately trained and licensed in accordance with Workplace Hazardous Materials Information System (WHMIS) and Transportation of Dangerous Goods Act, Transport Canada (TDG).

.9 Act in a manner that is consistent with safe handling, loading, testing, and transporting PCB material.

.2 Codes and Standards:

.1 Be responsible for ensuring that recommended solutions are in compliance with applicable current Federal and Provincial Regulations, Codes, Standards and Policies. In Particular, without limiting Contractor's responsibilities, following regulations/guidelines, latest editions as amended, are to apply as required:

.1 The Canada Labour Code;

.2 National Fire Code;

.3 Occupational Health and Safety Act, Revised Statues of Ontario, as amended (including latest edition);

.4 Transportation of Dangerous Goods Act;

.5 Canadian Environmental Protection Act, Environment Canada;

.6 PCB Transformer Decontamination, Standards and Protocols, Canadian Council of Ministries of the Environment;

.7 Any Workplace hazardous materials as outlined in Hazardous Materials Information System (WHIMIS) as established in Hazardous Product Amendment Act.

.3 Obtain Certificate of Approvals as follows:

.1 Waste Management Systems;
.2 Transportation;
.3 Transfer;
.4 Treatment.

.4 Inspections and Characterization:

.1 Provide materials and labour required for inspection of PCB Material in storage or use at site prior to each shipment of PCB Material.

.2 Characterize and profile PCB material as required in accordance with requirements of TDG and WHMIS and any other applicable federal, provincial, or municipal regulations.

.3 Sample, characterize, and profile PCB material as required by any Subcontractors involved in this Contract, including preparation of waste profile sheets (WPS) with WPS Numbers assigned specifically to each existing PCB filled power transformer. A comprehensive bar-coded waste tracking system to be used by treatment facility to ensure accurate tracking of PCB Material. This bar-coding system is to be computerized as to minimize risk of human error when moving waste. Consultant reserves right to inspect waste tracking procedures throughout duration of contract.

.5 Treatment Facility:

.1 PCB samples taken from materials following treatment to be analysed in a Canadian Association of Environmental Laboratories (CAEL) approved laboratory. Prior to commencement of Work, forward to Consultant Certificate of laboratory.

.2 Treatment facility to be capable of receiving various types of PCB Materials. A copy of waste tracking procedure to be submitted as part of shop drawings. This procedure to include tracking of PCB material, which is sent to a third party for incineration. This procedure to explain how specific WPS used for this project is tracked throughout work.

.3 Ensure that PCB Materials carries this car coding from point of pick-up of PCB Materials from site.

.4 Shop drawings to include a copy of Certificate of Approval. Description of types of waste that treatment facility can receive to accompany shop drawings.

.5 A description of closure plan of facility to be included with shop drawings. This closure plan to include a closure bond, which can be used in event of insolvency or bankruptcy of Contractor. Amount of this bond is to be included with proposal and is to be sufficient to cover cost of destruction for materials which appear in Certificate of Approval for storage at Contractor's facility at any given time.

.6 Include Certificates of Insurance with this proposal. Treatment facility to carry a minimum $5,000,000.00 Pollution Legal Liability Insurance and a minimum of $5,000,000.00 Aggregate Consultant's Environmental Liability Insurance. Commercial General Liability Policy to carry a minimum of $5,000,000.00 Umbrella.

.7 Test metals continuously after treatment to ensure no contaminated metal leaves site. Sample cleaned metals using hexane ensuring that any PCB residual is transferred to swab.

.8 Consultant and Owner will not entertain any proposals which include storage of PCB material outdoors. Materials, before and after treatment to be stored inside Contractor's own building.

.6 Acceptable PCB removal specialist companies are as follows:

.1 Aevitis Inc.;
.2 Sanexen.

## 2.03 ELECTROMAGNETIC INTERFERENCE PROVISIONS

.1 Electromagnetic interference (EMI) provisions to include shielding of applicable structures, systems, and components as outlined herein this article. Include for requirements and costs.

.2 Cover wall behind vertical bus duct risers with electromagnetic shielding, consisting of solid hot-rolled pickled steel or µ-metal (mu-metal) as required, designed to reduce magnetic field radiated from bus duct to a maximum of 5 milligauss at a distance of 500 mm (20") from wall in adjacent offices and occupied spaces.

.3 Enclose horizontal bus duct runs in ventilated shielding enclosures to reduce magnetic field radiation from bus duct to floors above and below and maintain full bus duct ampacity. Shielding to have sufficient attenuation ratio to reduce magnetic field to 5 milligauss or less at desk top level 900 mm (3') above floor).

.4 Cover floor under main power transformers with continuous shielding slab of sufficient grade to reduce magnetic field radiation from transformers to 5mG at desktop level on occupied floors below. Mount transformers on Trelleborg rubber isolators or approved equal.

.5 Install wall and floor mounted magnetic shields after civil work is finished but prior to installation of electrical equipment. Install shielding enclosure on horizontal bus duct runs after bus duct installation. Test and verify shielding performance in accordance to IEEE 644-94 as specified in Part 3 of this Section. Test results to be presented in a comprehensive engineering report to Consultant.

.6 Specialist Subcontractor retained for this project to have minimum 10 years experience in engineering design and installation on power frequency electromagnetic shielding, on major projects.

.7 Acceptable firms include:

.1 C-INTECH, 905-472 3949;
.2 Power Line Systems Engineering, 905-294-5468.

# PART 3 - EXECUTION

## 3.01 PCB MATERIAL PACKAGING, LABELLING AND LOADING

.1 Package, label, and load dismantled sections of transformer and PCB material.

.2 Provide labour and material required to repackage PCB material if, for any reason, repackaging is required to conform to TDG, WHMIS or Contractor requirements.

.3 Provide labour and material to label and placard PCB material and vehicles in accordance with TDG.

.4 Provide labour, equipment, material, and vehicles required to move and load PCB Material from work area to loading area and from site to designated final

destinations for storage/handling. Secure PCB Material into/onto specialty contractor's transportation vehicles, in accordance with TDG requirements.

## 3.02 PCB MATERIAL TRANSPORTATION

.1 Provide labour, material and vehicles required for transport of PCB materials to treatment facility.

.2 Be responsible for obtaining applicable Provincial, Federal and Municipal approvals and or permits required for transportation of PCB materials to treatment facility at Contractor's expense. This includes but is not limited to approvals for transporting material into or through jurisdictions outside province of Work.

.3 Prior to any shipment leaving site, confirm with Consultant in writing, that required approvals have been received, and that required notifications of other jurisdictions have been made.

.4 Prior to any shipments leaving site, indicate to Consultant in writing, final destination of shipments, and route that will be used to reach that destination.

.5 Prior to any shipment leaving site, perform an inspection of vehicle(s). Any loading or repackaging required to satisfy regulations or to ensure safe shipment of PCB Materials to be at Contractor's expense,

.6 Prior to any shipment leaving site, prepare required waste manifests in accordance with TDG. Be responsible to ensure that waste manifests are completed by vehicle driver and that copies are distributed in accordance with TDG requirements within required time.

.7 In Section 8.7(b) of TDG, requirements are specified for inspection of loads before and during transport of PCB material. If, Contractor proposes to use road vehicles for transporting PCB Material, then at each inspection stop that is required by TDG, telephone Consultant to provide an update on vehicle location and anticipated progress.

.8 Proposals that involve interim storage of PCB materials are unacceptable. PCB Materials to be handled by Contractor.

.9 Provide details on treatment technology to be used. This description to include, but not limited to, any limitations on nature or type of PCB materials that can be treated or stored, and a description of residual waste streams and location for destruction of same. Proposals which include land filling of any residual material are unacceptable. Nor is recycling of metals through scrap dealers acceptable.

.10 Destroy PCB material, including porous residuals at an approved Canadian destruction facility. Submit to Consultant, documentation confirming that facility is approved to treat or store types of PCB material.

.11 Upon destruction of PCB material, issue to Consultant a Certificate of Destruction for materials taken from site. Certificate of Destruction to reference waste manifests and specific waste profile sheets used for this project. These Certificates to also be specific to location from which PCB material is removed.

**END OF SECTION**

# 1 GENERAL

## 1.01 SUBMITTALS

.1 Submit shop drawings for products specified in this Section.

.2 Submit samples of each typical wiring device, faceplates, finishes and colours. Mount to sample board, clearly labelling devices and finishes. Submit for review by Owner and Consultant. Do not order any device unless finishes have been reviewed and approved by Consultant.

# 2 PRODUCTS

## 2.01 SWITCHES

.1 Switches to be CSA approved, ULC listed and labelled devices.

.2 Hubbell Canada Inc., HBL 1221 Series, CSA approved, heavy duty, industrial grade, back, and side wired, AC quiet action toggle type, 20 ampere, 120-277 V switches. Switches to include steel-nickel plated bridge, nylon toggle, one piece rivetless copper alloy spring contact arm and terminal plate, silver cadmium oxide contacts, brass binding head screws, one piece integral grounding terminal and stainless steel automatic grounding clips. Provide single way, 2-way, 3-way, and key type to suit specific application requirements.

.3 Hubbell Canada Inc. No. 1221-IL, CSA approved, heavy duty, specification grade, AC quiet action, illuminated polycarbonate handle toggle type, 20 ampere, 120-277 V switches.

.4 Legrand - Pass & Seymour, No. 1200 series, pressure sensitive door switches complete with metal box, plates, and wire leads, and suitable for flush installation. Light is "ON" when door is open.

.5 Rockwell Automation (Allen Bradley), 800T series, CSA approved and labelled, operator devices including pushbuttons and pilot lamps mounted in recessed mounting stations or surface mounting NEMA 4/13 enclosures. Enclosures in non-climate controlled areas to be NEMA type 4 weatherproof and water tight.

.6 Acceptable manufacturers are:

.1 Hubbell Canada Inc.;
.2 Cooper Wiring Devices (Arrow Hart);
.3 Legrand - Pass & Seymour;
.4 Leviton.

## 2.02 RECEPTACLES

.1 Receptacles to be CSA approved, ULC listed, certified and labelled devices.

.2 Hubbell Canada Inc., No. HBL 8200, extra heavy duty hospital grade with green dot symbol, back and side wired, flush, thermoplastic polyester face/body construction, duplex U-ground, 15 ampere, 125 V, 2-pole, 3-wire grounding receptacles complete with one piece nickel-plated brass mounting strip with integral grounding clips, ground retention clips, nickel-plated brass wiring clamps

with nickel-plated brass screws, front circuit identification area and reinforced thermoplastic base.

.3 Hubbell Canada Inc., No. HBL 8300 extra heavy duty hospital grade, U-ground, 20 ampere, 125 V, 3-wire duplex receptacle.

.4 Hubbell Canada Inc., No. HBL 8200SG series, extra heavy duty hospital grade, 15 ampere, 125 V, 2-pole, 3-wire grounding, tamper-resistant (safety shutter) duplex receptacles.

.5 Hubbell Canada Inc., No. IG 8200 series, extra heavy duty hospital grade, 15 ampere, 125 V, nylon construction, back and side wired, one piece mounting strap, isolated ground duplex receptacles.

.6 Hubbell Canada, No. HBL8262SA / HBL8362SA "CIRCUITGUARD" Series, hospital grade, 15/20 ampere, 125 V, duplex, surge suppression receptacles in blue finish, complete with light and alarm, 240 joules/15000A per mode.

.7 Hubbell Canada, No. IG8262SA / IG8362SA "CIRCUITGUARD" Series, hospital grade, 15/20 ampere, 125 V, duplex, isolated ground, surge suppression receptacles in blue finish, complete with light and alarm, 240 joules/15000A per mode.

.8 Hubbell Canada, No. GFR8200SG / GFR8300SG "AUTOGUARD" Series, extra heavy duty hospital grade, 15/20 ampere, 125 V, duplex, ULC Class "A", Group One, tamper resistant, weather resistant ground fault circuit interrupting receptacles complete with automatic self-test diagnostics, green power ON LED, red ground fault LED and 10ka short circuit current rating.

.9 Legrand - Pass & Seymour, No. 2122, 15 ampere, 125 V, recessed, ivory clock hanger receptacles and wall plates.

.10 Hubbell Canada, No. BR15TR series, specification grade, 15 ampere, 125 V, 2-pole, 3-wire, tamper resistant, safety shutter receptacles.

.11 Hubbell Canada, No. 4710, specification grade, 15 ampere, 125 V, single, 2-pole, 3-wire grounding twist lock receptacle.

.12 Hubbell Canada, No. 15 ampere and 50 ampere receptacles complete with neutral and ground conductors required for indicated number of phases as shown.

.13 Where noted that 20 A receptacles are required, include for "T" slot type of respective series of receptacles.

.14 Colour of special switches and receptacles (unless specified above), to be as specified in PART 3 of this Section of Specification.

.15 Special switches and receptacles not specified above are to be specified on drawings. Low voltage lighting controls are specified in Section entitled Lighting Control.

.16 Acceptable manufacturers are:

.1 Hubbell Canada Inc.;
.2 Cooper Wiring Devices (Arrow Hart);
.3 Legrand - Pass & Seymour;

.4 Leviton.

## 2.03 FACEPLATES

.1 Grade 18 8, type 430, 1 mm (0.032”) thick stainless steel, satin, brushed or natural finish, complete with a peel off protective plastic film, and stainless steel screws.

.2 Legrand - Pass & Seymour, "Jumbo" 302 stainless steel wallplates.

.3 Colours and finishes of faceplates are specified in Part 3 of this Section.

.4 Acceptable manufacturers are as per switches and receptacles.

## 2.04 PUSHBUTTONS OPERATORS

.1 Rockwell Automation (Allen-Bradley) Ltd., 800T Series operators as follows:

.1 emergency off pushbuttons: oversized 60 mm (2-1/2") diameter red plastic mushroom head pushbutton with shroud, thrust washer, and an aluminum faceplate with "EMERGENCY POWER OFF" identification lettering or other nomenclature as required to suit application. Push buttons to be Pull/Twist to release type. EPO push button to be 2-pole type to achieve functionality as illustrated on system wiring diagrams shown on the drawings. Equivalent to Allen-Bradley 800T-FX6AV series;

.2 pushbuttons: standard 30 mm (1-1/4") diameter plastic pushbuttons in Red/Green colours as required for application, momentary/maintained/2 position push-pull operations as required, flush/extended/mushroom heads; non-illuminated/illuminated, with aluminum faceplate with identification lettering nomenclature as required to suit application;

.3 pilot lamps: 30 mm (1-1/4") diameter illuminated LED pilot lights, red/green/amber/white/clear colours as required to suit application; of voltage ratings as required to suit application; with contact block; with aluminum faceplate with identification lettering nomenclature as required to suit application; push to test feature where required;

.4 with enamel painted steel or stainless steel faceplate for flush mounting onto recessed wall boxes or in millwork, suitable for mounting of devices;

.5 with NEMA 1 box for surface mounting applications in climate controlled areas, CSA approved for application and of size suitable for mounting of devices;

.6 with minimum NEMA 3R box for surface mounting applications in non-climate controlled areas, CSA approved for application and of size suitable for mounting of devices;

.7 with STI type flip open polycarbonate tamper-proof cover and audible alarm device activated when cover is open, and custom labelling.

.2 Exact type and ratings of devices are to suit specific applications.

.3 All devices provided shall be CSA/ULC listed.

.4 Acceptable manufacturers are:

.1 Rockwell Automation (Allen-Bradley);
.2 Eaton (Cutler-Hammer);
.3 Square D;
.4 GE.

## 3 EXECUTION

### 3.01 INSTALLATION OF SWITCHES

.1 Provide switches and install in electrical outlet boxes. Refer to drawings to determine flush or surface mounting requirements. Generally, flush mount devices in finished areas. Size electrical boxes to suit device requirements as per device manufacturer's recommendations. Properly ground device to box and ground system as per code requirements and manufacturer's instructions.

.2 For pricing only, switches to be ivory for devices connected to normal power circuits, red for devices connected to essential power circuits including isolated power centres.

.3 Every switch connected to essential (emergency) power circuits, to be illuminated toggle type.

.4 Illuminated operation of lighted switches to suit specific applications as confirmed with Consultant.

.5 Ensure that switches located adjacent to doors are located at strike side of door. Confirm door swing requirements on architectural drawings, not on electrical drawings.

.6 Coordinate installation of door switches with trades responsible for provision of doors and frames. Confirm exact locations of switches with Consultant to ensure optimum operation of switch to door position.

.7 Within special imaging/scanning unit type rooms, devices including mounting screws and hardware must be of non-ferrous construction as per unit manufacturer's instructions.

.8 Confirm final switch finishes with Consultant as per sample board submission specified in Part 1. Do not order any devices unless final finishes have been approved by Consultant.

.9 Additionally, refer to testing and verification requirements in Section entitled Electrical Work Analysis and Testing and include applicable requirements.

### 3.02 INSTALLATION OF RECEPTACLES

.1 Provide hospital grade receptacles and install in electrical outlet boxes. Refer to drawings to determine flush or surface mounting requirements. Generally, flush mount devices in finished areas. Size electrical boxes to suit device requirements as per device manufacturer's recommendations. Properly ground device to box and ground system as per code requirements and manufacturer's instructions.

.2 For pricing only, receptacles to be ivory for devices connected to normal power circuits, red for devices connected to essential power circuits. Isolated ground

receptacles connected to circuits fed from uninterruptible power supply units to be orange colour. Generally, install receptacles in Patient Care Areas vertically with ground pins up.

.3 Safety shutter type receptacles to be located where shown and required by code and CSA Z32.

.4 Confirm receptacle finishes via submission of sample board to Consultant. Do not order any devices unless final finishes have been approved by Consultant.

.5 In patient care areas, 15A/20A straight blade receptacles to be hospital grade.

.6 Comply with requirements of CSA Standard Z32, with regards to identifying circuit number and supplying panelboard, permanently identified at outlets. Identify this information in areas on front of each receptacle. In addition, provide typed label on wall below each device faceplate, identifying circuit number and panelboard from where each device is fed. Confirm nomenclature with Consultant prior to printing of labels and nameplates. Turn over label maker to Consultant/Owner prior to application for Certificate of Substantial Performance of the Work.

.7 Within special imaging/scanning unit type rooms, devices including mounting screws and hardware must be of non-ferrous construction as per unit manufacturer’s instructions.

.8 Where receptacles are indicated in counters and benches, box cut-out to be provided in counter and bench. Provide a box, receptacle, plate and branch circuit wiring. Branch circuit wiring within counters and benches to be flexible armoured cable, under requirements of local governing electrical code and standards. Install and connect complete.

.9 Confirm final receptacle finishes with Consultant as per sample board submission specified in Part 1. Do not order any devices unless final finishes have been approved by Consultant.

.10 Additionally, refer to testing and verification requirements in Section entitled Electrical Work Analysis and Testing and include applicable requirements.

## 3.03 INSTALLATION OF FACEPLATES

.1 Provide each switch and receptacle with a faceplate with an opening or openings suitable for device it conceals and covers openings around boxes. Secure faceplates to device frames with screws to match faceplates. Provide larger than standard type faceplates for devices that require engraved nomenclature to define special purpose for that device.

.2 Provide stainless steel faceplates in operating rooms, laboratories, treatment rooms, test rooms, etc.

.3 Provide nylon type faceplates for switches and receptacles circuited to emergency power sources and/or isolated power centres. For flush mounted devices, provide oversized faceplates as required to properly cover wall openings around recessed boxes. Provide faceplates with suitable identification label. Colour finish to be red, but to be confirmed with Consultant.

.4 Provide nylon type standard size faceplates for flush mounted switches and receptacles circuited to normal power.

.5 Provide galvanized stamped steel faceplates in service areas and equipment rooms where devices are surface mounted.

.6 Provide faceplates for computer equipment isolated ground receptacles with label printed with "Computer Equipment Only" lettering.

.7 Provide faceplates for housekeeping receptacles with label printed with "Housekeeping Only" lettering.

.8 Provide weatherproof insulated faceplates with hinged and gasketted receptacle access flaps for weatherproof receptacles denoted "WP" on drawings.

.9 Generally, oversized faceplates to be provided where engraved lettering is required.

.10 Faceplates for flush floor mounted receptacles to be forged brass rectangular faceplates.

.11 Confirm exact material, finish, and colour of faceplates for devices in any particular area with Consultant prior to ordering. Submit sample board as per requirements of Part 1.

.12 Provide faceplates with printed self-adhesive label on inside face identifying circuit number and panel feeding device. Turn over label maker to Consultant prior to application for Certificate of Substantial Performance of the Work.

## 3.04 INSTALLATION OF PUSHBUTTON OPERATORS

.1 Provide specified and suitable pushbutton operators and pilot lamps to suit various applications.

.2 Where flush mounted, provide faceplate for mounting onto recessed boxes.

.3 Where surface mounted climate controlled areas, provide suitable NEMA 1 box. In non-climate controlled areas, surface mounted devices to be mounted within minimum NEMA 3R rated boxes.

.4 Install devices in accordance with manufacturer’s instructions to suit application requirements of Owner. Connect complete to respective equipment being controlled. Provide required wiring in conduit.

.5 Test and verify operation of each device. Provide engraved lamacoid nameplate to identify system being operated and any special instructions. Confirm exact nomenclature with Consultant prior to ordering.

**END OF SECTION**

## Part 1 General

### 1.1 SECTION INCLUDES

.1 Materials for moulded-case circuit breakers, and ground-fault circuit-interrupters.

### 1.2 REFERENCES

.1 Canadian Standards Association (CSA International)

.1 CSA-C22.2 No. 5-16, Moulded-Case Circuit Breakers, Molded-Case Switches and Circuit-Breaker Enclosures (Tri-national standard with UL 489, and NMX-J-266-ANCE-2016).

### 1.3 SUBMITTALS

.1 Submit product data in accordance with Section 01 33 00.

.2 Include time-current characteristic curves for breakers with ampacity of 600 A and over or with interrupting capacity of 22,000 A symmetrical (rms) and over at system voltage.

.3 Certificates:

.1 Prior to installation of circuit breakers in either new or existing installation, Contractor must submit 1 copy of a production certificate of origin from the manufacturer. Production certificate of origin must be duly signed by factory and local manufacturer's representative certifying that circuit breakers come from this manufacturer and are new and meet standards and regulations.

.1 Production certificate of origin must be submitted to Consultant for approval.

.2 Delay in submitting production of certificate of origin will not justify any extension of contract and additional compensation.

.3 Any work of manufacturing, assembly or installation to begin only after acceptance of production certificate or origin by Consultant. Unless complying with this requirement, Consultant reserves the right to mandate manufacturer listed on circuit breakers to authenticate new circuit breakers under the contract, and to Contractor's expense.

.4 Production certificate of origin must contain:

.1 Manufacturer's name and address and person responsible for authentication. Person responsible must sign and date certificate.

.2 Licensed dealer's name and address and person of distributor responsible for Contractor's account.

.3 Contractor's name and address and person responsible for project.

.4 Local manufacturer's representative name and address. Local manufacturer's representative must sign and date certificate.

.5 Name and address of building where circuit breakers will be installed:

.1 Project title.

.2 End user's reference number.

.3 List of circuit breakers.

**1.4 WASTE MANAGEMENT AND DISPOSAL**

.1 Separate waste materials for reuse and recycling in accordance with Section 01 74 20.

.2 Collect and separate for disposal paper, plastic, polystyrene, corrugated cardboard, packaging material in appropriate on-site bins for recycling in accordance with Waste Management Plan.

.3 Separate for reuse and recycling and place in designated containers Steel, Metal and Plastic waste in accordance with Waste Management Plan.

## Part 2 Products

**2.1 BREAKERS GENERAL**

.1 Moulded-case circuit breakers, and Ground-fault circuit-interrupters: to CSA C22.2 No. 5.

.2 Bolt-on moulded case circuit breaker: quick- make, quick-break type, for manual and automatic operation with temperature compensation for 40 degrees C ambient.

.3 Common-trip breakers: with single handle for multi-pole applications.

.4 Magnetic instantaneous trip elements in circuit breakers to operate only when value of current reaches setting.

.1 Trip settings on breakers with adjustable trips to range from 3-8 times current rating.

.5 Circuit breakers to have minimum 10,000 A symmetrical rms interrupting capacity rating.

**2.2 THERMAL MAGNETIC BREAKERS DESIGN A**

.1 Moulded case circuit breaker to operate automatically by means of thermal and magnetic tripping devices to provide inverse time current tripping and instantaneous tripping for short circuit protection.

## Part 3 Execution

**3.1 INSTALLATION**

.1 Install circuit breakers as indicated.

## 3.2 CLEANING

.1 Progress Cleaning: clean in accordance with Section 01 74 11 - Cleaning.

.1 Leave Work area clean at end of each day.

.2 Final Cleaning: upon completion remove surplus materials, rubbish, tools and equipment in accordance with Section 01 74 11- Cleaning.

.3 Waste Management: separate waste materials for recycling reuse in accordance with Section 01 74 21 - Construction/Demolition Waste Management and Disposal.

.1 Remove recycling containers and bins from site and dispose of materials at appropriate facility.

**END OF SECTION**

## Part 1 General

### 1.1 PRODUCT DATA

.1 Submit product data in accordance with Section 01 33 00.

### 1.2 WASTE MANAGEMENT AND DISPOSAL

.1 Separate and recycle waste materials in accordance with Section 01 74 20

### 1.3 REFERENCE STANDARDS

.1 CSA Group.

.1 CSA C22.2 No.39-13, Fuse Holder Assemblies.

## Part 2 Products

### 2.1 DISCONNECT SWITCHES

.1 Fusible or Non-fusible, horsepower rated disconnect switch in CSA Enclosure 3R or 12, size as indicated.

.2 Provision for padlocking in on-off switch position by three locks.

.3 Mechanically interlocked door to prevent opening when handle in ON position.

.4 Fuses: size as indicated (if applicable).

.5 Fuse Holders: to CSA C22.2 No.69 suitable without adaptors, for type and size of fuse indicated (if applicable).

.6 Quick-make, quick-break action.

.7 ON-OFF switch position indication on switch enclosure cover.

.8 Acceptable manufacturers: Schneider (Square D), Siemens and Eaton (Cutler-Hammer).

### 2.2 EQUIPMENT IDENTIFICATION

.1 Provide equipment identification in accordance with Section 26 05 00.

.2 Indicate name of load controlled on size 4 nameplate.

### 2.3 ISOLATION SWITCHES

.1 Toggle type.

.2 HP rated.

.3 120,240,208V rated, single or 3 phase to suit motor.

.4 Padlock provision in off position.

.5 Surface mount enclosure, CSA type 3.

## Part 3 Execution

### 3.1 INSTALLATION

.1 Install disconnect switches complete with fuses if applicable.

.2 Mount isolation switches at motors as indicated.

.3 Mount securely at 1800 mm above finished floor to top of switch. Provide a minimum of 1000 mm clear floor space in front of the switch.

### 3.2 EQUIPMENT IDENTIFICATION

.1 Provide equipment identification in accordance with Section Identification 26 05 00.

.2 Nameplate for each disconnect switch Size 5 engraved in accordance with Section 26 05 00. Indicate disconnect load, amperage, voltage, and phase (i.e., rooftop unit, 60 amp, 120/208V, 3 phase).

.3 Identify circuit number on disconnect switch (i.e. "B-36").

**END OF SECTION**

## PART 1 - GENERAL

### 1.01 SUBMITTALS

.1 Submit shop drawings for products of this Section, and on Schedule of Luminaires on drawings.

.2 Include photometric data, lamp, and ballast information for each luminaire. Include ballast data identifying maximum circuit loading limitations.

.3 Photometric data to include: total input watts, candlepower summary, candela distribution zonal lumen summary, luminaire efficiency, CIE type, coefficient of utilization, lamp type and lumen rating in accordance with IESNA testing procedures.

.4 Include copy of certification that lenses and louvers comply with local governing building code requirements for flame spread ratings.

.5 For poles, submit documentation that poles supplied are suitable for steady wind velocity and gust velocity of area of installation, and suitable for total effective projected area of mounted lighting equipment.

.6 For exterior site areas or parking areas, where luminaires are proposed that are not from based specified manufacturer, provide luminaire manufacturer's computer prepared detailed photometric layout drawings with complete photometry showing performance levels of proposed luminaires. Clearly identify lighting levels, quantity, locations, mounting heights, etc. Identify variances from base design.

### 1.02 WARRANTY

.1 Warranty requirements are as follows:

.2 unless otherwise noted, LED and LED drivers for a period of five (5) years from date of acceptance of Work by Owner for its intended use;

.1 include costs for personnel, equipment and labour for replacing lamps and ballasts covered under warranty;

.2 re-lamp luminaires (except LED types) used during construction period before such date of acceptance of Work by Owner.

### 1.03 SUBSTITUTIONS

.1 Provide luminaires as specified in Schedule of Luminaires and as per documented List of Manufacturers, where applicable. During construction period, no substitutions are permitted unless compelling reasons are given and accepted by Owner and reviewed with Consultant. A delay caused by Contractor's failure to order luminaires to meet construction schedule is not a valid reason.

.2 Make requests for proposed substitutions as per requirements of Section entitled Electrical Work General Instructions and Division 01.

.3 Consideration of any proposed substitutions after Bid Period to be at Consultant's sole discretion.

## PART 2 - PRODUCTS

### 2.01 LUMINAIRES

.1 Provide luminaires in accordance with Schedule of Luminaires found on drawings. Luminaires are to be CSA approved or have special local electrical authority approval.

.2 Provide thickness of metal as indicated in Schedule of Luminaires and details, or as required so that luminaires are rigid, stable and resists deflection, twisting, warping or bending under normal installation procedures, re-lamping etc., or no less than requirements specified herein the specifications.

.3 Unless otherwise noted, construct fluorescent luminaire bodies from minimum 20 gauge cold rolled prime steel and of rigid construction to permit any suspension method without sag. Unless otherwise noted, provide body finishes of corrosion resistant, chemically treated and electrostatically spray painted baked white enamel. Reflecting surfaces to be white with an average reflectance of not less than 85%. Provide adjustable mounting brackets for troffers mounted in ceilings.

.4 Unless otherwise noted, linear and continuous linear architectural LED luminaires bodies to be constructed of extruded aluminum and of rigid construction. Unless otherwise noted, provide body finishes of corrosion resistant, chemically treated and electrostatically applied post powder coat finish. Efficiency not to be less than 69%.

.5 Unless otherwise noted, vandal resistant luminaires to be constructed of heavy duty extruded aluminum rails and die cast end caps, complete with stainless steel torx with centre reject pin and Allen head set screws. Screw heads to be mounted and concealed under lens. Lens to be extruded UV stabilized polycarbonate lens with internal linear ribbed design.

.6 Provide neoprene or silicone gasketting, barriers and stops where required to prevent light leaks or water/water vapour penetration.

.7 Fabricate housings to allow for easy accessibility and replacement of parts.

.8 Fabricate fixtures with a minimum number of joints. Make unexposed joints by acceptable method such as welding, brazing, screwing or bolting. Soldered joints are unacceptable. Do not use blind metal tapping methods or rivets for fastening parts which must be removed during service, or for fastening electrical components and supports. Cast parts, including die-cast members, to be of uniform quality, close grained, rigid, true to pattern, free from blow holes, pores, discoloration, hard spots, shrinkage defects, and cracks or other imperfections that affect strength and appearance or are indicative of inferior metals or alloys.

.9 Reflectors and reflecting cones or baffles to be free of any tooling marks, spinning lines or marks by other assembly techniques. For fluorescent sources, iridescence to be low. Finishes to be equal to first quality polished, baffled, and anodized "Alzak".

.10 Lamp sockets to be suitable for indicated lamps and be set so that lamps are positioned in optically correct relation to all luminaire components. Preset adjustable sockets at factory for lamp specified.

.11 Lenses and louvres to comply with local governing building code and other local governing code flame spread rating requirements.

.12 Unless otherwise noted, construct acrylic lens from 100% virgin acrylic and not less than 3.22 mm (0.125") thick. Fluorescent K12 acrylic lenses to have recessed prismatic pattern with no fade-outs or streaks and be of strain-free and uniform production. Glass lenses to be minimum 9.5 mm (0.375") thick.

.13 Recessed luminaries with replaceable/serviceable parts such as ballasts, lamps, sockets, etc., must be accessible from lens side (ie. room side) of fixtures to allow for proper accessibility.

.14 Luminaires to be factory assembled and tested prior to delivery on site.

.15 Exposed parts and hardware of luminaires located in non-climate controlled areas to be corrosion resistant and weather resistant. Hardware to be tamper-proof. Manufacturer exterior luminaire poles with corrosion resistant finish and construction. Pole suppliers to ensure that poles supplied are suitable for steady wind velocity and gust velocity of area of installation, and suitable for total effective projected area of lighting equipment. Submit verification of this with shop drawings.

.16 When requested, submit luminaire samples.

.17 Dimensions for coves, valances, and strips as shown on drawings are for bidding purposes only. Job measure for exact dimensions of louvres, lenses and strips.

.18 Dimensions for linear and continuous linear LED as shown on drawings are for bidding purposes only. Job measure for exact dimensions requirements to suit installation location.

.19 Review exact colours and finishes of luminaires with Consultant after award of contract but prior to ordering. Obtain information in time to meet installation schedule.

.20 For high intensity discharge types of luminaires, arrange for manufacturer of ballasts to supply with shop drawings a detailed data sheet identifying maximum circuit loading limits. Review drawings and confirm that circuits are not overloaded.

.21 Coordinate with ballast manufacturers and dimmer/occupancy control manufacturers to ensure that components are compatible with each other and that interconnections do not affect performance, life or any warranties.

.22 Products of same specified type to be of same manufacturer.

## 2.02 MEDICAL SYSTEMS SIGNAGE

.1 Illuminated signage is specified on Schedule of Luminaires. Signage is of type that wording is visible when sign is illuminated. Review exact nomenclature and colour of display (lamps and/or illuminated panels) with Consultant and local governing authority prior to ordering.

.2 Coordinate exact connection and integration requirements with respective medical equipment to which with signage are associated. Refer to issued drawings.

## 2.03 LEDS AND DRIVERS

.1 General features include:

.1 CSA approved, ULC listed and labelled;

.2 Operating temperature:

.1 Luminaires for applications in climate controlled area: operating temperature range through -20°C (-4°F) to 50°C (122°F);

.3 With rapid and changing development of LED technology, provide most technically proven and most advanced and successfully tested LED technology at time of installation;

.4 Specification standards to meet requirements of IES LM 79 and LM-80.

.5 Be 100% compatible with connected dimmer controls to provide dimming down to 5%.

.2 Light emitting diodes (LEDs) features to include:

.1 LEDs to be selected from same colour bin size for consistency in chromaticity and meet ANSI C78 377A as a minimum;

.2 generally, colour temperature range to be from 2700 K to 6500 K; specific temperature requirements to be identified on Schedule of Luminaires;

.3 minimum CRI of 85, but shall be as specified on the fixture schedule;

.4 rated life (based on 70% lumen depreciation level) from 50,000 to 70,000 hours.

.3 Driver (ballast) features to include:

.1 Operate from 60 Hz input source of 120 VAC with sustained variations of ± 10% (voltage and frequency) with no damage to driver;

.2 Output regulated to ±5% across load range;

.3 Power factor greater than 0.90;

.4 Total harmonic distortion less than 20%;

.5 Class A sound rating;

.6 Comply with ANSI C62.41 Category A for transient protection.

.4 Acceptable manufacturers to be as recommended by luminaire manufacturers.

## 2.04 DIMMERS

.1 EATON WBSD-010SLC-V Greengate 0-10V Slide Dimmer Wallstation

.2 Lutron Diva Series, DVSTV-WH

.3 Acceptable manufacturer is EATON, Lutron or Wattstopper. Other Dimmers low voltage dimmers will be considered if recommended by supplier and meeting the criteria noted above.

## PART 3 - EXECUTION

### 3.01 INSTALLATION

.1 Provide luminaires as required. Obtain required training from manufacturer's representative on any special installation procedures. Install products in accordance with manufacturer's instructions to suit specific installation requirements.

.2 Before placing luminaire orders:

.1 verify quantity requirements;

.2 thoroughly review ceiling types, finishes and construction details; verify ceiling types with latest Architectural Drawings; order luminaires to suit correct ceiling type;

.3 ensure that required mounting assemblies, frames, rings and similar features are included;

.4 review colours and finishes with Consultant.

.3 Include for assembly and mounting of luminaires and lamps, complete with:

.1 wiring and connections;

.2 fittings and hangers;

.3 aligners;

.4 box covers;

.5 other accessories required for a complete, safe and fully operational assembly.

.4 Where outlet boxes locations are shown on drawings, they are diagrammatic only. Position outlet boxes to coincide with suspension hangers and knockouts.

.5 Install ceiling fixtures in centre of tiles unless dimensioned otherwise on Reflected Ceiling Plans. Locate hangers on tile centres or intersections. Mount recessed downlights, troffers, and surface mounted luminaires in or on full tiles. Install fixtures in and on acoustical tile ceilings in alignment with tile joints.

.6 Cut holes for recessed luminaires to exact size so that gaps are not visible or luminaire trims cover gaps.

.7 Mount surface ceiling luminaires perfectly level or plumb, tightly to ceiling without showing a space or light leak between frame and ceiling.

.8 Carefully align linear luminaires shown in continuous lines or rows, so that rows appear as straight lines. Variation in alignment not to exceed 6 mm (1/4") for any 5 m (16') run.

.9 Provide spacers for fixtures mounted on low density ceiling material.

.10 Provide plaster frames for recessed fixtures in plaster or gypsum board ceilings.

.11 Prepare fixtures, trim and poles and standards required to be painted.

.12 Wiring between fluorescent lamp holders and associated operating and starting equipment to be of similar or heavier gauge than leads furnished with approved types of ballasts with equal or better insulating and heat-resistant characteristics.

.13 Protect wiring with tape or tubing at all points where abrasion may occur. Conceal wiring within fixture construction except where design or mounting dictates otherwise.

.14 Splices:

.1 Minimize number of splices.

.2 Make with approved mechanical insulated steel spring type connectors, suitable for temperature and voltage conditions to which splices are to be subjected.

.3 Splices are not to be made unless properly terminated in accessible identified junction boxes.

.15 Support luminaires directly by ceiling slab structure and not to formed steel decking, ceiling hangers, ductwork, piping, cable trays, etc.

.16 Do not tighten wing nuts, bolts, or screws that allow fixture adjustment for recessed adjustable fixtures.

.17 Install spread lenses only where called out on Schedule of Luminaires and Specifications.

.18 Use cloth gloves when handling reflector cones, louvers, halogen lamps, glass, sconces and all exposed surfaces of fixtures.

.19 Co-ordinate luminaire installation with work of other trades to ensure that necessary recessing depths and mounting spaces are provided.

.20 Install luminaires in accordance with applicable architectural drawing reflected ceiling plans and/or wall elevations and/or field instructions issued by Consultant. Review final luminaire locations with Consultant prior to roughing-in. In equipment rooms, shafts and similar secondary areas, install luminaires after mechanical and other major work is roughed in and adjust luminaire locations as required.

.21 Align and position all adjustable luminaires, and ensure that luminaires with adjustable lamp holders are properly positioned to correspond to lamps specified.

.22 Comply with requirements of local governing electrical code regarding support of luminaires in suspended ceilings.

.23 Independently suspend luminaires in suspended ceilings from ceiling slab. For each luminaire, provide minimum two (2) cable supports secured to ceiling slab and to luminaire. Confirm with local governing authorities and review with

Consultant if a variance to this requirement can be made for specific luminaires of low weight.

.24 Connect luminaires to power circuits and controls as required. Refer to drawings notes and schedules. Include for both normal and emergency power circuits as required.

.25 Locate exit signs in final locations reviewed with Consultant and approved by local building code authority. Connect to power circuits as required. Where applicable for emergency power requirements, connect to emergency battery units. Relocate exit sign and re-direct direction arrows to suit local building code authority requirements and directions, and as reviewed with Consultant.

.26 Notify Consultant immediately and relocate if necessary as reviewed with Consultant, if:

.1 fixture placement is in conflict with a structural beam, mechanical duct, plumbing pipe, etc.;

.2 space above ceiling is not sufficient;

.3 any reason that a fixture cannot be located where it is dimensioned or shown on construction documents.

.27 Existing luminaires designated to be relocated and reused, to be:

.1 disconnected, removed and stored in a safe area as designated by Owner and reviewed with Consultant until ready for re-installation;

.2 inspected, cleaned, repaired and re-lamped;

.3 identified to Consultant of requirement for replacement parts for broken lenses, faulty ballasts, broken mounting hardware, etc., as necessary to return luminaires to good working condition; identify cost to Consultant for repair/replacement parts.

.28 Extend ground conductors from metal parts of poles to building grounding provisions. Generally locate devices in locations on drawings, but base exact locations on coordination and review with Consultant and governing authorities. Review luminaires and pole finishes with Consultant prior to ordering. Run wiring in conduit.

.29 Provide seismic restraints to suspended luminaires, in accordance with latest local governing building code requirements to suit zone of Place of Work.

.30 Provide dimming ballasts or drivers luminaries to be dimmed. Coordinate between dimming system vendor and luminaire vendors to ensure 100% compatibility.

.31 Generally, provide fluorescent luminaires with electronic type ballasts, unless within areas or rooms with electronically sensitive equipment, for which ballasts are to be electromagnetic types. Refer to luminaire schedules on drawings.

.32 Ground and bond luminaires as per local governing electrical code requirements.

.33 New fluorescent lamps to be operated for minimum 100 hours at full output prior to application for a Certificate of Substantial Performance of the Work.

.34 If requested, demonstrate operation of luminaires intended for special applications such as building floodlights and other decorative purposes. Adjust their locations within a reasonable distance to obtain effects desired.

.35 Test and adjust exterior luminaires at times after sunset, in presence of Consultant and at times acceptable to Owner and reviewed with Consultant.

.36 Prior to turn over of Work to Owner, clean luminaires in manner recommended by manufacturer and to satisfaction of Consultant.

.37 Lamps to be new and intact when project is complete and ready for acceptance.

.38 Include a full lamp listing in Operating and Maintenance Instruction Manuals.

.39 Additionally, refer to testing and verification requirements in Section entitled Electrical Work Analysis and Testing and include applicable requirements.

## 3.02 INSTALLATION OF DIMMERS

.1 Provide flush wall box dimmers in locations and connect to control lighting as indicated. Confirm exact locations prior to roughing-in. Equip each dimmer with a faceplate. Review faceplate colour with Consultant prior to ordering.

.2 Install components in accordance with manufacturer’s instructions to suit specific installation requirements.

.3 Where identified, provide central enclosure cabinet for mounting dimmers within and connect complete. Clearly identify each dimmer and enclosure with engrave Lamacoid nameplates with circuit labels. Review exact nomenclature with Consultant prior to ordering.

.4 When installation is complete, check and test operation of each dimmer and adjust as required.

.5 Ensure that each dimmer is properly sized to suit connected load.

**END OF SECTION**

# 1 GENERAL

## 1.01 GENERAL

.1 The Communications Contractor shall be responsible for measuring and confirming cable pathways before installation of any cable to ensure no cabling will exceed the specified distance limitations. Where the distance limitations exceed the maximum distance required to comply with the current standards and manufacturer's guidelines, the Communications Contractor shall inform General Contractor or Project Manager before installation of cabling. No compensation for removal of over length cabling will be accepted or approved.

## 1.02 INDOOR CABLE DISTRIBUTION

.1 Ensure ANSI/TIA-568-C installation practices apply to all indoor cable distribution.

.2 The Communications Contractor shall install and distribute cabling using riser sleeves, conduit, communications cable tray, floor ducts systems and/or surface raceways as indicated on drawings and as supplied and installed by Division 26.

.3 All cable extending from the cable tray shall be in conduit to the point of termination.

# 2 PRODUCTS

## 2.01 METALLIC CONDUIT (EMT)

.1 Unless noted elsewhere in these specifications, horizontal distribution cables shall be routed in EMT conduit from the basket tray to service/drop location.

.2 Refer to Division 26 for general EMT conduit specifications. Unless otherwise noted in Division 27 specifications, minimum conduit size for use with communications cabling shall be 19mm (3/4”).

## 2.02 VELCRO WRAPS

.1 Velcro wraps shall be supplied and installed to support and neatly bundle all cabling.

.2 No nylon or plastic wraps will be permitted on this project and will be removed and replaced by Velcro wraps at the expense of the Communications Contractor.

.3 Velcro wraps shall be black.

Specified Product: (Or approved Equivalent)

| Manufacturer | Part Number | Width | Tensile Strength |
|---|---|---|---|
| Panduit | HLM-15R0 | 0.330” | 18 |
| Panduit | HLS-15R0 | 0.750” | 50 |
| Panduit | HLS-75R0 | 0.750” | 50 |
| Panduit | TTS-20R0 | 0.750” | 40 |
| Panduit | TTS-35R3-0 | 0.750” | 40 |

## 2.03 OVERHEAD WIRE BASKET TRAY (BY DIVISION 26)

.1 Provide wire basket of types and sizes indicated with all required splicing and mounting hardware.

.2 Wire basket crosswire to be constructed with shaped wire to provide a flat surface for cable support, avoiding pressure points or cable strain. Round wire construction shall not be allowed.

.3 Wire basket shall be made of high strength steel wires and formed into a standard 2 inch by 4-inch wire mesh pattern with intersecting wires welded together. All mesh sections must have at least one bottom longitudinal wire along the entire length of the straight section.

.4 Wire diameter shall be 0.195” (5mm) minimum on all mesh sections up to 16 linear inches. Wire diameter line wire shall be 0.234” (6mm) minimum on all mesh sections more than 16 linear inches.

.5 All straight section longitudinal wires shall be constructed with a continuous top wire safety edge.

.6 All Tray sections and splicing assemblies shall be UL/C-UL Classified as an Equipment Ground Conductor (EGC).

.7 The cable tray shall be installed complete with splice bars, “uni-strut” trapeze supports, threaded rod, Waterfall at all cable exit points, ceiling anchors and all manufacturer recommended installation components following manufacturer’s installation guidelines and recommendations.

.8 All cable intersections including but not limited to “T”, 45 and 90 degree corners, etc shall be factory made and shall not be fabricated on site.

# 3 EXECUTION

## 3.01 GENERAL

.1 All pathways shall be installed to run parallel to building lines at all times.

.2 Pathways shall be installed in coordination with other trades to minimize interferences and obstructions. The Communications Contractor shall be responsible for relocating installed pathways at no cost to the Owner.

.3 All cable supports shall take into account all required seismic requirements as per applicable codes and standards.

.4 All cable supports shall be installed to the permanent structure of the building and be limited to areas that will not damage the structural stability such as tensioned beams and slabs. It is the responsibility of the Communications Contractor to submit information to the structural engineer for review and approval before installation.

.5 Pneumatic hammers shall not be used unless the Communications Contractor has written authorization from the building owner/landlord.

.6 The Communications Contractor shall minimize the removal/disturbance of fire spray insulation while installing cable supports and/or accessories.

## 3.2 DATA INDOOR CABLE DISTRIBUTION

.1 All data communication cables shall be separated from sources of electromagnetic radiation in compliance with TIA Standard Proposal SP-2072 and the following:

| Item | Minimum Separation Distances (<2kVA) | (2-5kVA) | (>5kVA) |
|---|---|---|---|
| Unshielded power lines or electrical equipment in proximity to open or non-metallic pathway. | 127 mm (5”(in)) | 305 mm (12”(in)) | 610 mm (24”(in)) |
| Unshielded power lines or electrical equipment in proximity to a grounded metal conduit pathway. | 64 mm (2.5”(in)) | 152 mm (6”(in)) | 305 mm (12”(in)) |
| Power lines enclosed in a grounded metal conduit (or equivalent shielding) in proximity to a grounded metal conduit pathway. | --- | 76 mm (3”(in)) | 152 mm (6”(in)) |
| Motors | | 1.2 m (4’-0”) | |
| Transformers | | 1.2 m (4’-0”) | |
| Conduit and cables used for electrical distribution less than 1kV | | 0.3 m (1’-0”) | |
| Conduit and cables used for electrical distribution greater than 1kV | | 1.0 m (3’-0”) | |
| Fluorescent Luminaires | | 300 mm (12”) | |
| Pipes (gas, oil, water, etc.) | | 120 mm (5”) | |
| HVAC (equipment, ducts, etc.) | | 150 mm (6”) | |

.2 All pathways and cabling installation shall maintain clearances from all electrical and heat sources as outlined below:

| | |
|---|---|
| Fluorescent Fixtures | 300 mm |
| Electrical distribution cabling and conduits less than 1KVA | 1.0 m |
| Electrical distribution cabling and conduits greater than 1KVA | 3.0 m |
| Transformers and Motors | 1.2 m |
| HVAC system including ducts | 150 mm |
| Mechanical piping | 150 mm |

.3 Prepare all conduits and pathways before installation of cabling. This shall include a bushing or ream all conduit openings, pulling of wire brush and mandrel to clean out ducts and identifying any potential cause of damage to cabling during installation. Report all items to General Contractor or Project Manager immediately.

.4 When installing cables in stacked duct banks install cabling in lower ducts leaving upper ducts for future installations.

## 3.3 METALLIC CONDUIT (EMT)

.1 Conduit runs shall follow building lines.

.2 Install plastic bushing/collars on any conduit end/opening.

## 3.4 VELCRO WRAPS

.1 Velcro wraps shall be installed at every J-hook, between every pair of J-hooks or within 50 mm of a J-hook to bundle cabling neatly.

.1 Velcro wraps shall be installed every 915 mm to bundle cabling installed in cable tray neatly.

.2 Velcro wraps shall be installed every 152 mm to neatly bundle cabling at all locations on racks, cabinets, patch panels and IDC mounts.

## 3.6 FIRE STOPPING

.1 All communications pathways shall be fire stopped with approved fire-stopping assembly as required by all applicable codes and standards.

## 3.7 GROUNDING AND BONDING

.1 All communications pathways shall be grounded as required by all applicable codes and standards. Grounding and Bonding shall comply with TIA 607 current standard and product manufacturer installation guidelines.

**END OF SECTION**

## PART 1 - GENERAL

### 1.01 SUBMITTALS

.1 Submit shop drawings for products specified in this Section.

.2 Include data sheets for cabling, faceplates, terminal cabinets, racks, etc., and proposed cabling testing sheets.

.3 Submit following:

.1 proof that final installation drawings have been reviewed by a Registered Communications Distribution Designer (RCDD);

.2 sample of proposed labelling of components and wiring;

.3 sample of proposed test sheet;

.4 copy of tester calibration certificate;

.5 written confirmation that telecommunication system vendor is manufacturer's valid certified system vendor for at least duration of contract work and is in good standing at time of Bid submission;

.6 copy of system manufacturer's warranty.

### 1.02 REFERENCE STANDARDS

.1 Comply with latest editions of following, as applicable for project:

.1 ANSI/TIA-568-C.,family of Telecommunications Standards, including:

.1 ANSI/TIA-568-C.0 - Generic Telecommunications Cabling for Customer Premises;
.2 ANSI/TIA-568-C.1 - Commercial Building Telecommunications Cabling Standard;
.3 ANSI/TIA-568-C.2 - Balanced Twisted-Pair Telecommunication Cabling and Components Standard;
.4 ANSI/TIA-568-C.3 - Optical Fiber Cabling Components Standard;
.5 Issued addenda.

.2 ANSI/EIA/TIA 606-B (CSA T528) - Administration Standard for Telecommunications Infrastructure of Commercial Buildings;

.3 ANSI/EIA/ TIA-607-B (CSA T527) - Grounding and Bonding Requirements for Telecommunications in Commercial Buildings;

.4 ANSI/EIA/TIA-569-C (CSA T530) - Commercial Building Standards for Telecommunications Pathway and Spaces;

.5 ANSI/TIA-526-14-B - Optical Power Loss Measurements of Installed Multimode Fiber Cable Plant;

.6 ANSI/TIA/EIA-526-7 - Optical Power Loss Measurements of Installed Singlemode Fiber Cable Plant;

.7 Latest Building Industry Consulting Service International (BICSI) standards;

.8 Applicable local Building Codes.

.2 Work to be installed by system manufacturers certified system installers/vendors who are certified and experienced in implementing selected data cabling system and to perform related testing programs.

.3 System final installation layout to be designed and/or reviewed by a RCDD. Submit shop drawings verifying this requirement.

## 1.03 WARRANTY

.1 System manufacturers to provide a minimum twenty (20) year full parts, labour, and performance warranty on all passive components including structural cabling system. These warranties to be provided in written certificate form and that guarantee following:

.1 passive system components, e.g. patch panels, UTP cable and outlet jacks, are free from manufacturing defects in material or workmanship;

.2 approved cabling systems exceed specifications of TIA-EIA 568B.2.1 standards for specified category, in particular for attenuation and near-end cross-talk, loss and bandwidth requirements;

.3 installation supports applications for which it was originally designed as well as future versions of system performance specifications and any future applications using TIA/EIA 586B.2.1 component and cabling standards;

.4 replacement or repair of any originally installed registered system component to be completed at no cost for parts and labour to Owner during warranty period. Any components repaired or replaced to be warranted for remainder of warranty.

.2 System manufacturers to provide in writing to Owner that in event of demise or failure or change in approved status of installing certified system installer/vendor, manufacturer to be responsible for providing another certified system installer/vendor to fulfil remainder of warranty conditions.

.3 Claim for repair procedure to comprise of contractor being notified of a problem and who will conduct necessary tests and repairs to correct problem. Should contractor be unable to resolve problem, contractor to contact system supplier who will take necessary action and provide any technical support to correct problem.

.4 Initial response time to a repair claim for a registered system to be within four (4) hours from time Contractor was notified of system fault.

.5 Ensure that selected network cabling component manufacturer includes a system warranty that is a true "end-to-end" structured cabling system warranty from a single manufacturer, which includes data/voice communications outlet and patch cord at workstation, horizontal copper cabling, and patchpanel and patch cords at LAN room. In addition, this warranty is to be valid with selected fibre optic cabling solution.

## 1.04 SCOPE OF WORK

.1 This Section provides minimum standards for provision of a structured cabling system to network computer systems for complex. Requirements for network electronics are responsibility of Owner's Network Integrator. Work includes but is not to be limited to following:

.1 provision of Category grade End-to-End certified structured cabling system;

.2 provision of data and voice cabling, communications outlets, patchpanels and associated equipment;

.3 system testing and verification;

.4 coordination of system requirements and integration requirements with integrated systems.

.2 The local area network system must be "protocol neutral" and provide users access into a variety of resources from any location within the Complex. An Ethernet backbone shall be utilized for the system with intelligent network switches coordinating and managing data flow. The wiring configuration is based on a "physical star" topology in which cabling runs emanate in a radial pattern from the main data communications room in which the intelligent switches are located.

.3 The network cabling system vendor shall coordinate with Electrical Contractor to ensure that properly sized conduits, back boxes outlet boxes, junction boxes and floor boxes are provided of sufficient size as per EIA/TIA Standards to accommodate CAT 6 system wiring and devices, with particular emphasis on bending radii of cabling. Conduit and boxes not meetings Cat 6 standard requirements must be replaced.

.4 System to be designed to support minimum 1000Base-T standards.

.5 System to be designed to support minimum 802.11a/b/g/n/ac standards.

## 1.05 SYSTEM SUPPLIER QUALIFICATIONS

.1 System supplier qualifications include:

.1 being an established communications and electronics contractor that has and currently maintains a locally run and operated business for at least five years and holds applicable provincial and local licenses;

.2 be an Authorized Distributor or established franchisee for manufacturer of product/system proposed with full manufacturer's warranty privileges and be capable of providing post warranty service;

.3 employ technicians who have attended and successfully completed manufacturer's technical certification classes for proposed system;

.4 show satisfactory evidence, upon request, that they maintain a fully equipped service organization capable of furnishing adequate inspection and service to system on a 24-hour/7-day basis;

.5 maintain at their facility necessary spare parts in proper proportion as recommended by manufacturer to maintain and service equipment being supplied.

.2 Submit written evidence of qualifications to Consultant for approval.

## PART 2 - PRODUCTS

### 2.01 BACKBONE CABLING

.1 Copper Backbone:

.1 Backbone cabling to be ULC listed, and labelled, UTP cable to comply with TIA/EIA-568-C requirements for Category 5e transmission, tested and verified to exceed Category 5e component performance. Minimum cable specifications are:

.1 24 AWG copper conductor, twisted with 25-pairs contained in a PVC jacket;

.2 Riser rated CMR (if run in conduit); grey outer jacket;

.3 Conductor insulation shall be colored as per the TIA/EIA-568-C standards.

### 2.02 HORIZONTAL CABLING

.1 Cable shall be Hubbell Nextspeed.

.2 Horizontal cabling to be ULC listed, and labelled, UTP cable to comply with TIA/EIA-568-C requirements for Category 6 transmission, tested and verified to exceed Category 6 component performance. Horizontal cabling shall have a FT4 CMR rating, unless run in a plenum space and not contained within a conduit in which case shall have a FT6 CMP rating. Minimum cable specifications are:

.1 Conductors: 23 AWG. solid copper insulated conductor twisted with four pairs around a star filler contained in a PVC jacket;

.2 Plenum rated CMP; blue outer jacket;

.3 Conductor insulation shall be colored as per the TIA/EIA-568-C standards.

.3 All horizontal cabling for the use of the Wi-Fi systems (access points) and select equipment shall be CAT 6a UTP, 4 pair, minimum 23 AWG, solid copper conductor, compliant with EIA/TIA cable category as identified below.

.1 The cable shall be CSA certified and stamped with CMP rating accordingly.

.2 Plenum cables are to be used in all cable implementations for both fiber and copper.

.3 All UTP cables shall meet requirements identified below.

## 2.03 JACKS

.1 Copper jacks:

.1 Jacks shall be Hubbell Nextspeed.

.2 Data/voice jacks to exceed category 6 performance and meets following specifications:

.1 RJ45, eight pin modular jack;

.2 Housing constructed of high impact, flame retardant, thermoplastic, white in color;

.3 Pins constructed of beryllium copper tinned with 50-micro inch gold plating;

.4 IDC 110 punch down contacts.

## 2.04 OUTLETS

.1 Designed to accommodate Hubbell jacks;

.2 Stainless steel, with top and bottom labelling fields

.3 4-port for general use outlets;

.4 1-port telephone mountable for outlets identified as 1-voice.

## 2.05 BIX WIRING FIELD

.1 GigaBIX 2-connector housing;

.2 GigaBIX 6-port and 25-pair connectors;

.3 Category 6 cross connect jumper wire;

.4 Designation strips, labels and wiring distribution rings;

## 2.06 ACCEPTABLE NETWORK CABLING SYSTEM MANUFACTURERS

.1 Horizontal network copper cabling infrastructure is to be end-to-end solution from a single manufacturer, which includes data communication outlets and patch cords at workstations, and patch panels and patch cords at LAN/Telecommunication rooms. To this horizontal network is integrated fibre optic cabling infrastructure from same manufacturer or approved listed herein, maintaining full warranty requirements for systems comprising this Section.

.2 Acceptable network cabling system manufactures for provision of horizontal network copper cabling infrastructure are:

.1 Hubbell;

.3 Acceptable network cabling system manufactures for provision of backbone network fibre cabling infrastructure are:

.1 Corning;

## 2.07 ACCEPTABLE CONTRACTORS

.1 ComNet

.2 State Group

.3 Marcomm

# PART 3 - EXECUTION

## 3.01 INSTALLATION OF NETWORK CABLING – GENERAL

.1 Properly handle and install structured network cabling in accordance with manufacturer's specifications. Avoid undue pulling tension, abrasion, or rough handling to ensure that cables will permit transmission up to required category rating design speed for cables. Install cables without splices or cuts to ensure elimination of reflections, discontinuities, impedance mismatches, etc. maximum horizontal length of copper cabling from workstation to network switch is not to exceed 90 m (295') or less if recommended by system manufacturer to meet required category grade rating performance standards. Maximum length of patch cables (either cross connects or interconnecting with electronic equipment to connect devices at work area outlet), to be a total of 10 m (30'). Maintain system manufacturer's minimum channel lengths as confirmed with system manufacturer. Provide cable loops in accordance with manufacturer's instructions.

.2 Unless otherwise noted or where cable tray is shown for such use, run cabling in conduit. Install pull cords for future use, in conduits extending between floors.

.3 Generally, no more than two (2) 90-degree changes in direction are recommended for cable installed in conduit without pullboxes and not more than 40% fill ratio. Confirm exact conduit bending radii restrictions and fill ratios with system manufacturer and comply with those standards.

.4 With consideration in minimizing alien crosstalk to levels as per BICSI standards and manufacturer's standards, dress cables in a neat and orderly fashion from entrance of communications closet to relay racks using vertical and horizontal cable management trays and paths. Do not exceed manufacturer's distance limitations to maintain required category rating performance standards.

.5 Care to be taken to ensure that during installation, nicks, abrasions, burning and scuffing of cable is prevented. Replace cables found to be damaged regardless of whether cable passes category grade rating or fibre performance testing standards.

.6 Secure bundled cables transitioning between floors via ladder cable tray, to vertical ladder sections with Velcro wraps. Use waterfall (rounded transition) fittings for cable changing from a horizontal path to a vertical one. This is to maintain minimum bend radius for cabling system. Support cables running through risers between floors such that they are properly supported for their weight, especially in situations with high pair count cables and large bundles.

.7 Electrical Contractor and telecommunication system vendor to provide coordination of structured cabling system with other systems as required.

.8 Required necessary drilling and anchoring components to be installed before any horizontal cable is installed.

.9 Route horizontal cable into equipment racks/enclosures and neatly bundle with Velcro cable ties. Maximum number of cables per bundle to be 25.

.10 Securely mount fire retardant plywood on wall in each telecommunications room or closet.

.11 Cables wraps are to be Velcro type and are not to be over tightened.

.12 Provide grounding and bonding requirements as specified in Section entitled Grounding and Bonding.

## 3.02 COPPER CABLE INSTALLATION

.1 Establish good communications between pull and monitor locations prior to starting a cable pull.

.2 Allow no rough handling, kinking, denting or abrasion of the cable, and that cable is never left on the ground where it may be stepped on or otherwise damaged. Should the cable be damaged in any way, the comm. contractor shall replace the cable at the cost of the comm. contractor.

.3 If cable is unreeled during installation, maintain an extended figure 8 configuration to prevent kinking or bending. When layering long lengths of cable in 'figure 8s', use cardboard between layers for strain relief.

.4 Do not exceed maximum pulling force as per manufacturer’s specifications.

.5 Maintain a bend radius during installation of 20 times the cable diameter.

.6 Cable coiled in an outlet box should be installed with a 10 x cable diameter bending diameter (i.e. 50 mm) to the extent possible.

.7 Cable permanent link shall not exceed 90 m

.8 Cable slack shall be included in the 90 m cable limit. Provide 200 mm of slack in the outlet and 3m within the comm. room when installing copper cable

## 3.03 SEPARATION OF DATA COMMUNICATION CABLES FROM SOURCES OF ELECTROMAGNETIC INTERFERENCE

.1 Separate data communication cables from sources of electromagnetic radiation in accordance with TIA Standard Proposal SP-2072 and following:

.1 FT-6 rated data cabling raceway and power conductors (2 KVA power circuits) raceway require 125 mm (5") clearance;

.2 for fluorescent and LED luminaires, required clearance is 300 mm (12");

.3 clearance increases up to 600 mm (24") for power circuits over 5 KVA.

.4 for large motor, transformers, power panels, etc., required clearance is 1m (39");

.5 route cables to avoid direct contact with steam piping, hot water piping or other heat sources to avoid thermal degradation.

.6 CCTV coax, controls and security cables shall not but run in the communications raceway.

## 3.04 INSTALLATION OF RACKS

.1 Provide racks and secure to floor with bolts and concrete anchors.

.2 In locations where more than one rack is required, butt multiple racks together. Provide wiring channel interconnection such that wiring from rack to another is not exposed.

.3 For open racks, provide metal raceway chimney channel for conductors extending down from ceiling, such that wiring is not exposed. Secure channel to rack and ceiling.

.4 Run wiring neatly bundled within wiring management channels. Do not over tighten Velcro tie wraps such that they deform cable jacket. Velcro straps to easily slide along length of cable. Velcro tie wraps used in plenum spaces to be CMP/FT-6 rated.

.5 Protect cable from any obstructions using appropriate grommeting in roof of rack.

.6 Properly ground and bond rack and equipment to room ground bus as per specifications and to standards of TIA/EIA 607.

## 3.05 SYSTEM IDENTIFICATION

.1 Provide a complete identification system that clearly designates following:

.1 horizontal cable;

.2 workstation (or faceplate);

.3 horizontal/passive patchpanel port;

.4 switch/active patchpanel port;

.5 patch cords;

.6 switch rack.

.2 Obtain Owner’s approval of identification format, prior to start of work. Format to comply with Owner’s standards. Submit proposed identification system and nomenclature with shop drawing submission.

.3 Labels:

.1 Labels for outlet and patch panel identification to be typewritten/computer printed self-adhesive type with white printing area at outlet location and on face of patch panel; legible permanent marker on inside of outlet box cover; use minimum font size Arial 10 point.

.2 Number and identify each computer hub rack with a 20 mm x 50mm (¾" x 2") engraved lamacoid plate, with white letters on black background. For letters and numbers use Arial 24 font size. Fasten nameplates with minimum two metal screws.

.3 Cable, faceplate Identification:

.1 Confirm identification scheme with KGH IT before proceeding with labelling, including the Telco room designation.

.2 Permanently identify horizontal UTP cables at both ends of cable, placed within 13mm (½") at outlet location and 50 mm (2") at rack location and inside of outlet cover in following manner:

" RACK - FLOOR - PORT ", Example: “HDF1-4-E01”

.4 Patchpanel And Patch Cord Identification:

.1 Identify patchpanel ports in simple numeric form approved by Consultant/Owner.

.2 Identify patch cords at both ends in simple numeric form, not necessarily corresponding to port numbers and be approved by Consultant/ Owner.

.4 Identification Log:

.1 Record cable and workstation identification in a hard copy "CABLE IDENTIFICATION LOG" which is to be handed over to Owner after cable testing and certification is complete. Forward duplicate copy to Consultant.

## 3.06 CABLE TESTING AND SYSTEM CERTIFICATION

.1 Trained technicians who have successfully attended an appropriate training program and have obtained a certificate as proof thereof shall execute the tests.

.2 Test procedures and test equipment shall comply with the following standards (in their latest draft including all addendums):

- TIA/EIA-568-C
- TIA/EIA TSB-140
- TIA/EIA-526-14-A

.1 The copper test equipment shall comply with the accuracy requirements for level III field testers and Category 6 cabling as defined in the above standards. All software shall be the latest versions, and licensed.

.2 The optical fibre test equipment shall comply with the accuracy requirements for field testers and fibre optic cabling as defined in the above standards. The OTDR shall operate within the range of 1310 nm +/- 10 nm and 1550 nm +/- 20 nm for singlemode fibre testing

.3 All installed cable runs shall be tested and must pass the requirements of the standards defined above. Any failing link shall be diagnosed and corrected. The corrective action shall be followed with a new test to prove that the corrected link

meets the performance requirements. The passing result of the tests for all links shall be provided in the test results documentation.

.4 All Category 6 cable links shall be tested for channel link performance and the following parameters:

- T568A wire map for continuity on all pairs
- Length – using an accurate NVP value, the pair with the longest electrical delay shall be used for the maximum length.
- Insertion Loss
- NEXT Loss must be tested from both ends of the cabling
- ELFEXT must be tested from both ends of the cabling
- Propagation delay and delay skew
- Return Loss must be tested from both ends of the cabling
- PSNEXT must be tested from both ends of the cabling
- Power Sum ELFEXT must be tested from both ends of the cabling

.5 All fibre cable shall be tested before installation while still on the reel for attenuation at both 1310 nm and 1550 nm for single mode to ensure that it meets or exceeds the manufacturer's stated performance. The contractor shall provide a soft copy of the test results to the Communications Consultant. The Communications Consultant must approve this report prior to any installation activity.

.6 All fibre cable links shall be tested for channel link performance for the following parameters:

- End-to-end attenuation tested at both 1310 nm and 1550 nm for single mode to ensure predicted system performance.
- A-B Polarity where duplex connectors are used
- Optical Time Domain Reflectometer (OTDR) signature trace documentation for as-built records.

.6 An independent testing agency shall be used to perform random testing of 10% of all copper runs at the discretion of the consultant. Testing agencies must be requested by the contractor for review and written acceptance by the Consultant.

.7 The testing agency will provide a written report and all test results to the Consultant for his review and acceptance. If the testing agency identifies in a written report that the test results agree with the test result achieved by the Contractor, no further testing will be required. If the results are not in sufficient agreement, the Contractor will correct the problem and retest all of the installed cables and arrange to have a new 100% testing performed by the testing agency and a new report prepared. This will continue until the testing agency agrees that the test results are acceptable. This is all at the Contractor's sole expense.

.8 Testing will be considered completed once records show that all installations meet the 100% pass rate.

.9 Test Result Documentation:

.1 The test results information for each link shall be recorded in the memory of the field tester upon completion of the test.

.2 The test results records saved by the tester shall be transferred into a Windows™-based database utility that allows for the maintenance, inspection and archiving of these test records. A guarantee must be made that these results are transferred to the PC unaltered, i.e., “as saved in the tester” at the end of each test.

.3 The database for the completed job shall be stored and delivered on CD-ROM including the software tools required to view, inspect, and print any selection of test reports.

.4 General Information to be provided in the electronic data base with the test results information for each link:

- The identification of the customer site as specified by the end-user
- The identification of the link in accordance with the naming convention defined in the overall system documentation
- The name of the technician performing the test.
- The work station room/area number of the cable being tested.
- The overall Pass/Fail evaluation of the link-under-test
- The name of the standard selected to execute the stored test results
- The cable type and the value of NVP used for length calculations
- The cables available headroom.
- The date and time the test results were saved in the memory of the tester
- The brand name, model and serial number of the tester
- The identification of the tester interface
- The revision of the tester software and the revision of the test standards database in the tester
- The results for each of the tests in text form and graphical form.

All of the above entries shall appear on a single 8.5” x 11” page per cable.

**END OF SECTION**

## PART 1 - GENERAL

### 1.01 SUBMITTALS

.1 Submit shop drawings for products specified in this Section. Include annunciator schedules, revised system programming and sample of revised graphic annunciator layout and nomenclature.

.2 Submit copies of final system testing and verification reports and certificates of approvals from local governing inspection authority.

## PART 2 - PRODUCTS

### 2.01 EXISTING FIRE ALARM SYSTEM

.1 Existing fire alarm system serving complex is SIEMENS. Provide additional devices and work to retrofit and extend system to serve additional and renovated areas. Additional devices to be 100% compatible with and of same manufacture as per existing system. Include provision of necessary control panel and annunciator work of existing system to accommodate integration of additional devices.

.2 Include for and engage Owner's existing system manufacturer's authorized technicians to provide and perform required system products and work. Contact for existing system is Michael Taite (E-mail: Michael.taite@siemens.com, Tel: 613-449-3233).

.3 Verify with existing fire alarm system manufacturer during Bid period, exact requirements needed to provide renovation work. If necessary, visit site with manufacturer to review existing conditions. Confirm and coordinate exact work responsibilities with system vendor. Review items of clarification or proposed revisions to Bid Documents with Consultant during Bid Period.

### 2.02 ADDITIONAL FIRE ALARM SYSTEM WORK

.1 System retrofit work to include but not be limited to provision of following:

.1 modifications to existing head end equipment including provision of additional device connection modules, zone modules, amplifiers and system re-programming;
.2 additional transponders/data gathering panels (DGP);
.3 additional initiating devices (pull stations, heat/smoke/flame detectors);
.4 additional alarm indicating devices (speakers, horns, strobes);
.5 additional interfaces and interconnections to auxiliary building systems;
.6 review of existing battery backup capacity and amplifiers (as applicable) and increasing capacities to accommodate additional device loading and to meet applicable governing local code requirements;
.7 additional wiring in conduit and/or fire rated cables.

.2 Additional system components to be listed as products of a single manufacturer under appropriate category, by Underwriter's Laboratories of Canada and bear ULC label. System components and work in conjunction with system installation to meet specific application requirements of local governing authorities, codes, standards, regulations and requirements of following:

.1 CAN/ULC-S524, Standard For Installation Of Fire Alarm Systems;
.2 CAN/ULC-S527, Control Units For Fire Alarm Systems;
.3 CAN/ULC-S537, Standard For Verification Of Fire Alarm Systems ;
.4 local governing building code;
.5 local governing electrical code;
.6 local governing building permit applications for approvals;
.7 other requirements of local governing authorities.

## 2.03 RETROFIT WORK AND DEVICES

.1 Retrofit control panels and annunciators to supervise and annunciate additional and relocated devices. Additional initiating devices shall be devices that are 100% compatible with existing controls and be ULC listed and labelled for connecting to respective control units. Include costs for manufacturer's authorized representative to perform control panel/transponder work and to reprogram system software to accommodate renovation work. Provide additional zone modules as required and additional batteries as required to supply back-up battery capacity to the additional components.

.2 Additional devices to be ULC listed and labelled devices suitable for fire alarm applications. Power supplies and other components to be CSA approved where required by local governing authorities and codes.

.3 Exact type of device to be used in each area of installation to be as recommended by system manufacturer to suit specific applications and to be approved for such use as per ULC standards. Devices in non-climatic controlled areas to be weatherproof, corrosion resistant and ULC listed for use in below freezing temperatures. System manufacturer to be responsible for ensuring compliance with these requirements.

.4 Transponders:

.1 Transponders or data gathering panels to match type of existing manufacturer's system serving facility and of series of intelligent, microprocessor based control panel that connects back to existing system panel to handle network communications. Transponders to have full system operations data available on display on LCD. System connected data communications, control points and monitoring points to be monitored and controlled by transponders. Information on transponder is to be made available to network and to be displayed at each transponder as required. Such points include:

.1 initiating circuit devices such as addressable analogue detectors, including detector type and detector values;

.2 conventional addressable or zone connected smoke, heat and flame detectors;

.3 addressable devices such as pull stations; sprinkler devices;

.4 control circuits such as speaker/strobe circuits, fan/elevator/smoke exhaust controls, electromagnetic lock controls and other similar operations and integrated equipment.

.2 Transponders to include features and accessories to at least match existing units but supplemented with additional components to suit project renovation requirements as per system manufacturer's recommendations.

.3 Connections back to existing system panels to include required cabling, wired in Class A (as required by local fire authorities and confirmed with system manufacturer) identifiable loops in addition to other fire rated conductors. Final wiring requirements to be determined by system manufacturer to suit specific applications and local governing authority code requirements.

.4 Transponder enclosures to be minimum NEMA 1 with additional sprinkler-protection provisions including gasketting of openings/doors and ventilation louvers designed to protect live components from water spray of activated sprinklers. Surface mounted panels to include drip shield. Panels to be wall mounted, enamel finished, steel cabinets. Where flush mounted, include suitable trim. Panels mounted in finished areas to be of finishes reviewed with Consultant.

.5 Devices:

.1 Additional smoke detectors and heat detectors: to be of type and rating to suit specific application as per existing system manufacturer's recommendations.

.2 Strobes and combinations strobes/audible devices: of type to match existing system standards; include additional strobes to meet latest governing building code requirements.

.3 Addressable modules as required for connection of additional devices.

.4 Ancillary devices as required to complete system.

.5 Refer to drawings for additional device requirements.

.6 End-Of-Line Resistors and Isolators:

.1 End-of-line resistors for standard alarm and signalling circuits to be sized to ensure correct supervisory current flows in each circuit.

.2 End-of-line resistors to be mounted on a stainless steel plate for mounting on a standard single gang box and bear ULC label.

.3 Isolators to be provided in accordance with code requirements and installed as per system manufacturer's requirements to isolate/monitor zones, loops, group of devices within building and between buildings.

.7 Wiring:

.1 CSA approved and ULC listed wire and cable, approved for fire alarm circuits; with colour coded, insulated solid copper conductors; of type as per local governing electrical code and local governing fire authority requirements.

.2 Sized and installed in accordance with system manufacturer's instructions and local governing electrical code.

.3 To be mechanically protected to satisfaction of local fire authority.

## 2.04 TESTING AND VERIFICATION WORK

.1 Refer to Part 3 for system testing, verification and certification Work.

# PART 3 - EXECUTION

## 3.01 INSTALLATION – GENERAL

.1 Prior to start of Work as part of shop drawing submission process, review with system manufacturer following:

.1 device types to ensure that selected type is suitable for intended application on project;
.2 locations of devices to ensure proper operation and coverage are in compliance with requirements of local fire authorities;
.3 device mounting heights to ensure proper operation and coverage are in compliance with requirements of local fire authorities;
.4 device back box requirements to ensure size and depth suit system manufacturer's recommendations for specific devices;
.5 proposed revisions required to existing system sequence of operation.

.2 Immediately advise Consultant of any requirements of above that may necessitate revisions to design documents.

.3 Install fire alarm system components and connect complete.

.4 Perform Work in conjunction with this installation to meet requirements of latest editions of local governing building code, local governing electrical code, ULC Standards including Installation Standard CAN/ULC-S524, and any applicable local governing codes. If any requirements of these specifications are different, omitted or contrary to ULC-S524 Standard, then ULC Standard governs and overrides these specifications, but in no instance will standards established by drawings and specifications be reduced by any of Codes referred to previously. Control units and annunciators to be in accordance to latest requirements of ULC Standard CAN/ULC-S527 "Control Units for Fire Alarm Systems.

.5 In addition, work to meet Owner's standards, and recommendations and instructions from system manufacturer.

.6 During work to existing fire alarm system, proposed time and duration of interruption to be approved by Owner and reviewed with Consultant. At any time due to emergency situations, Owner may request by-passed zone(s) to be re-instated immediately. In all areas where renovation work requires shutdown of any part of fire alarm protection system, provide manual fire alarm protection (Fire Warden) by means of supervising area as approved by local governing authorities. At no time allow fire alarm system or any one zone to be left inoperative overnight. Provide required bypass wiring and temporary wiring to maintain all parts of fire alarm system operative during construction and alterations.

.7 Fire alarm system manufacturer's authorized technician to supervise control panel, transponder, and annunciator work.

.8 Provide sequence of operation for fire alarm system as approved by local fire authority and reviewed with Consultant. Refer to additional requirements on drawings.

.9 Demonstrate system to local Fire Department and obtain their approval for complete system.

## 3.02 INSTALLATION OF DEVICES

.1 Install required devices. Do not install devices in locations that may hamper proper operation of devices including adjacent devices.

.2 Obtain required training from manufacturer's representative on any special installation procedures. Install devices and perform work in accordance with manufacturer's instructions and requirements and in accordance to applicable codes of local governing authorities having jurisdiction.

.3 Review device finishes with Consultant prior to ordering.

.4 Install manual pull stations in boxes as required, recessed outlet boxes with plaster rings, except in unfinished areas where pull stations are surface mounted, in which case, install stations in surface mounted boxes. Comply with mounting height requirements for local governing building code barrier free access.

.5 Install mounting plate of thermal detectors to ceiling mounted boxes as required. Secure detectors to plates. Refer to floor plans and drawing symbol list to determine rating of detectors in any given area. Generally, do not install rate-of-rise type detectors in areas subject to sudden changes in temperatures, such as entrance vestibules. Confirm application requirements with system manufacturer and ensure that devices are ULC listed for such applications and are approved by local fire authority for such use.

.6 Secure base of each ceiling mounted products of combustion detectors to boxes as required, either flush or surface mounted as required. Secure detector heads to bases.

.7 Install cross zoned connection of detectors and remote indicating devices for areas of raised floors or within accessible ceiling spaces or for applications detailed on drawings.

.8 Mount each duct mounted products of combustion detector on duct in question and connect with smoke sampling tubes which extend into duct air stream. Install

a remote alarm lamp assembly for each duct mounted detector. Wall mount each lamp assembly on a standard 100 mm (4") outlet box as close as possible or practicable to detector. Do not locate duct detectors within 1 m (3') of duct size increaser or decreaser fittings or any duct elbow. Provide wiring in conduit and extend to connect back to system control unit.

.9 In application with hold open devices on doors, ensure compliance with NFPA regarding smoke detectors tied to hold open devices such that a signal received directly from smoke detector to cause release of door. Where electromagnetic locks are used on doors of egress, provide required automatic release of locks upon activation of fire alarm (i.e. via connection to auxiliary contact of adjacent pullstation). Provide required conductors and connections to fire alarm system and to electromagnetic locks.

.10 Provide required speakers. Speakers are flush and surface wall mounted cone type and surface mounted horn type as indicated to suit architectural wall/ceiling types, each complete with a proper backbox. Exterior speakers to be weatherproof and mounted with a weather sealed gland nut connection at proper dispersion angle. Install speakers in accordance with manufacturer's instructions for specific applications.

.11 Mount speakers in stairwells and wire vertically connected to specific zone as approved by local fire authority and reviewed with Consultant. Refer to drawing riser and annunciator schedule.

.12 Generally, audible device locations are indicated on drawings, however, exact audible device quantities and locations to be in accordance with results of audibility device coverage site tests. Provide suitable sound detection metering and personnel to make necessary tests. Relocate audible devices and/or provide additional audible devices as required.

.13 Support flush ceiling mounted speaker backboxes from structure and not suspended ceiling grid or tiles. Connect speakers to specified taps and ensure that sound levels are in accordance with local authority and sound level requirements. Adjust as required and certify that levels are in compliance with Code level requirements. Audible devices to be synchronized.

.14 Install amplifiers sized as required to power additional speakers and include spare capacity as specified.

.15 Install specified telephone handsets and mount in recessed wall mounting boxes. Connect complete with wiring in conduit to local transponder.

.16 Provide double voltage relays, with multiple contacts as required, to shut down fans as noted on drawings. Arrange relays to be energized at all times from fire alarm system to ensure that they are fail safe.

.17 Install visual notification appliances 2400 mm (8') above floor or 300 mm (12") below finished ceiling line. Provide visual notification devices in areas subject to high ambient noise levels, such as mechanical equipment rooms, computer equipment rooms, parking garage, etc., and areas designated for hearing impaired as per local building code requirements. Provide minimum 2 circuits per floor and connect devices in alternating scheme.

.18 Relocate devices to accommodate ceiling and wall demolitions and installation of ceilings and walls. Maintain fire alarm protection in areas of Work to satisfaction of

Owner and local fire authority. Provide required temporary supporting structures to support temporary located devices in order to maintain proper operation and fire protection. Obtain required inspections and approvals from local fire authority and Owner. Relocate devices to suit local fire authority directions.

.19 When ceiling and/or wall work has been completed, disconnect temporary devices and existing devices in temporary locations. Locate devices in permanent locations to suit renovations work as per issued drawings and Consultant's directions. Connect, adjust, test and verify.

.20 Provide required additional devices and install existing devices as required. Circuit device's to existing standards and in compliance with local governing codes and authorities. Determine exact quantities of circuits based on requirements of governing codes and standards, and recommendations of system manufacturer.

.21 Unless otherwise noted in Contract Documents, do not load device circuits more than 80% capacity.

.22 Devices in non-climate controlled areas to be weatherproof, corrosion resistant, ULC listed for operation in below freezing temperatures, and as recommended by system manufacturer for use for each specific application. Where electronics are not recommended for cold temperature applications, include for manufacturer's recommendations and directions in remotely locating addressable modules in closest heated areas and connecting to respective device in non-climate controlled areas.

## 3.03 REQUIREMENTS FOR INTEGRATED SYSTEMS AND EQUIPMENT

.1 Perform required fire alarm system wiring connections to mechanical equipment and other building systems to perform required interrelated functions. Provide required wiring, relays and/or contactors between fire alarm system and various equipment to achieve automatic or manual control and monitoring of equipment and to perform required integrated to fire alarm system functions. Provide shunt trip breakers as required. Provide fire rated conductors where required by local codes and local authorities.

.2 Provision of fire alarm supervisory wiring connections to include but not be limited to following (where applicable):

.1 door holders/releases and electromagnetic locks;

.2 devices as shown on drawings.

## 3.04 ADDITIONAL REQUIREMENTS

.1 Install wiring in conduit unless otherwise approved by Owner and reviewed with Consultant. Perform wiring connections associated with fire alarm system on terminal strips in junction boxes and colour coded. Provide wiring colour coding consistent for entire length of each run. When pulling wires into conduit, use lubricant and run wires straight and not twisted or abraded. Neatly secure exposed wires in apparatus enclosures with approved supports or ties. Clearly identify wiring at each termination point. In addition, number wiring with Brady Ltd. or Electrovert Ltd. Z-type markers. Colour conductors for each part of system in accordance with system equipment manufacturer's recommendations. Paint conduit couplings red of paint type suitable for application to standards of Division 09.

.2 Install wiring in accordance to requirements of applicable governing electrical code and to requirements of local governing authorities.

.3 Run alarm indicating circuits (speakers) and alarm receiving circuits (pull stations, detectors) in separate conduits from each other.

.4 Arrange sprinkler system alarm valve alarm zones to be separate from manual station, thermal detector and products-of-combustion detector device zones, which may be connected together into zones.

.5 Provide engraved Lamacoid identification nameplates for each equipment or wiring housing and secure to front of housing. Review exact wording designations and sizes to with Consultant prior to manufacture.

.6 Review nomenclature of annunciator identification with Consultant prior to ordering.

.7 Install end-of-line resistors to electrically supervise wiring. Generally, locate end-of-line resistors at ceiling lines above a pull station location. Provide isolators and install in accordance with ULC standards. Properly label and identify. Do not locate end-of-line resistors and isolators in concealed locations. Generally install in equipment rooms.

.8 Refer to drawing riser diagram and connection schedules. Riser drawings are diagrammatic and are not to be used for determining quantities or lengths. Quantities of components to be as per floor plans.

.9 Review exact location of components with Consultant prior to roughing-in.

.10 Ground and bond system as required by local governing electrical code and authority and system manufacturer.

## 3.05 SYSTEM TESTING, VERIFICATION AND CERTIFICATION

.1 Submit to Owner and Consultant, proposed schedule for testing and verification of system. Obtain such reviews prior to start of testing. Consultant and/or other Owner’s representatives to have option to witness all or part of testing and verification work. Notify Consultant and Owner minimum 7 working days in advance of testing.

.2 Include for fire alarm system manufacturer to inspect, test, verify and certify system components and wiring, individually and as a complete system, in accordance with requirements of CAN/ULC S537. Work to include but not be limited to provision of following:

.1 to ensure that type of equipment installed is that designated by Contract Documents;

.2 to ensure that wiring connections to equipment components show that installer observed ULC and CSA requirements;

.3 to ensure that equipment was installed in accordance manufacturer’s recommendations, and that signalling devices of whatever manufacture were operated or tested to verify their operation;

.4 to ensure that supervisory wiring of those items of equipment connected to a supervised circuit is operating and that governmental regulations, if any, concerning such supervisory wiring, have been met to satisfaction of inspecting officials;

.5 to ensure that sequence of operation is in accordance with existing sequence of operation and any modifications identified on documents and are approved by local fire authority;

.6 to ensure that devices are commissioned and operable.

.3 System manufacturer to also be responsible for but not be limited to provision of following additional work to existing systems:

.1 coordinate with local fire authority inspector and Electrical Division Contractor, required testing and verification work in order to obtain certification and meet local fire code and local fire authority requirements;

.2 test system battery power supplies and demonstrate compliance with local governing building code and local fire authority requirements that battery supplies are capable of providing required 24 hours of supervisory power followed by local governing building code required time (or time directed by local fire authority) of full load power; exact method of testing to be approved by local fire authority, Consultant and Owner; confirm and review exact procedures with previously named parties prior to testing; include for sufficient sound measurement devices and personnel in order to successfully comply with this requirement;

.3 full review, testing, and verification of operation of building ventilation and smoke exhaust system and its integrated operation with fire alarm system and various pieces of air handling equipment;

.4 full review, testing and verification of operation of integrated systems such as elevators and their emergency sequence of operation, supervisory annunciation of sprinkler/standpipe monitor switches, pressure switches and flow switches, diesel genset alarms, security alarms, BAS alarms, release of door holders and electromagnetic locks, and any other integrated components; coordinate requirements with trades responsible for integrated components and systems who will be present at time of testing and verification work;

.5 test that system audible devices provide alarm sound levels in areas as per local governing building code and local fire authority requirements; site adjust tap settings of audible devices as required to achieve required audibility levels; also test that emergency voice communication system meets or exceed intelligibility requirements of local governing building code and is approved by local fire authority;

.6 assist in testing and verification of electromagnetic door locks to meet requirements of authorities having jurisdiction and to obtain overall approval of installation;

.7 coordination with Electrical Divisions and local fire authority to provide requirements to obtain certificates of approvals from local fire authority;

.8 provide full detailed test sheets of tested components and provide certification that system work has been fully tested, that devices have passed testing and that system is in proper work order in compliance to local governing code requirements and project documents; testing report documents to be additionally provided in electronic format as confirmed with Owner and reviewed with Consultant.

.4 Where project work is phased and Owner requires occupancy at various stages, include for providing system testing, verification and certification after completion of each phase of work, to approval of local governing authorities. Upon Substantial Performance of the Work, include for providing system testing, verification and certification of entire system work.

.5 Contact local fire authority inspector and coordinate and arrange for Fire Inspector to perform required inspections. Integrate local fire authority inspection requirements with testing and verification work to extent as per Fire Inspector's directions. Obtain full approval and certification by local fire authority.

.6 Local fire authority inspector, Consultant and Commissioning Agent to at their discretion test system or parts of system in their review of test reports. Correct/repair any failures or deficiencies found in system, whether or not identified in test reports of manufacturer. Re-test and re-verify until successfully passed, at no extra cost to Owner.

.7 Obtain from local fire authority required certificate of approval of system and forward to Consultant.

.8 Arrange for manufacturers to supply reasonable amounts of technical assistance with respect to any changes required to conform to paragraphs above. During period of inspection, testing and verification, make Electricians available to do any required correction work and to assist during this Work. Include for trades responsible for integrated components (i.e. exhaust fans, sprinklers, elevators, gensets, etc.) and systems to be present at time of testing and verification work.

.9 On completion of verification, inspection and testing of system, obtain from manufacturer and forward to Consultant, a verification certificate together with detailed inspection reports listing each and every system component, its location in building and its acceptability. Verification certificate and inspection reports to be prepared and signed by certified testing technicians of manufacturer. Signed test reports to confirm that systems are installed and perform in accordance with requirements specified above.

.10 Obtain from system manufacturer and testing agency and forward to Consultant a certificate of liability insurance of minimum amount of Two Million Dollars ($2,000,000.00) that is to be registered for this project to show satisfactory proof of manufacturer's liability coverage for both their product and personnel.

.11 Unless approved in writing by Owner and reviewed with Consultant, do not use open flame and/or smoke for testing.

.12 Testing technicians to be registered technicians in good standing with Canadian Fire Alarm Association (CFAA) or be a Certified Fire Alarm Electrician (CFAE) with Electrical Contractors Association of Ontario (ECAO) as deemed acceptable to Ontario Fire Marshall.

.13 Additionally, refer to testing, coordination and verification requirements in Section entitled Electrical Work Analysis and Testing and include applicable requirements.

## 3.06 MONITORING OF SYSTEMS

.1 In areas that remain occupied and used by Owner during Work, daily monitor and supervise existing fire alarm system and other fire protection systems serving renovation/working areas. Ensure that system is left in proper operating condition at end of each working day. Include for but not be limited to performing following:

.1 under presence of Owner's representative, check each morning and evening (start and end of work) of each day, system to ensure that it is in proper working condition;

.2 if portions of system are not in proper working order, provide temporary bypass wiring (if fire alarm system, must be subject to approval of local fire authority), and/or provide supervisory personnel to monitor systems for area affected;

.3 document and sign off with Owner's representative signing off also, each respective daily check condition;

.4 retrofitting work to system in manner that does not affect portion of system serving areas outside of renovation/working areas.

.2 Maintain fire protection of areas which may include fire watch during temporary shutdowns of existing systems, in accordance with requirements of local governing code and local governing authorities.

**END OF SECTION**

# APPENDIX I

## STERIS AMSCO CENTURY MEDIUM STEAM STERILIZER 26 X 37.5” – NORTH

This page intentionally left blank.

REV. AC

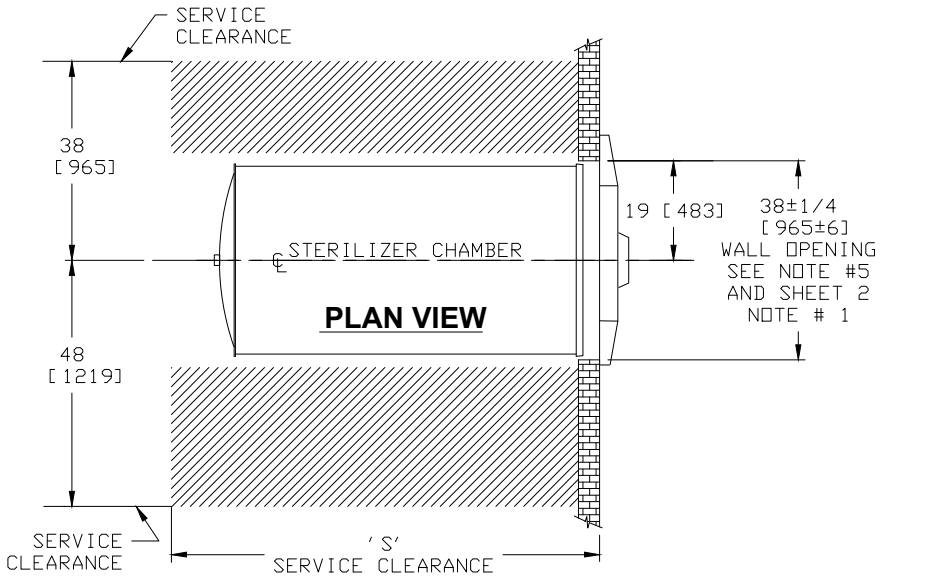


NOTES:

1. WALL THICKNESS: 4" TO 8" (102-203).
2. ALL DIMENSIONS IN INCHES AND (MM).
3. THIS SERVICE CLEARANCE MUST BE MAINTAINED TO ALLOW ACCESS TO STERILIZER FOR SERVICEABILITY.
4. THE SHADED PLUMBING SERVICE CLEARANCE FLOOR SURFACE MUST BE SMOOTH WITH NO OBSTRUCTIONS (SUCH AS PIPING, WIRING, FLOOR SINKS, ETC.) THIS OBSTRUCTION FREE CLEARANCE MUST EXTEND TO HEIGHT OF AT LEAST 77" (1956) IN ORDER TO PROPERLY SERVICE
5. RECOMMENDED WALL OPENING FOR NEW CONSTRUCTION IS 40".

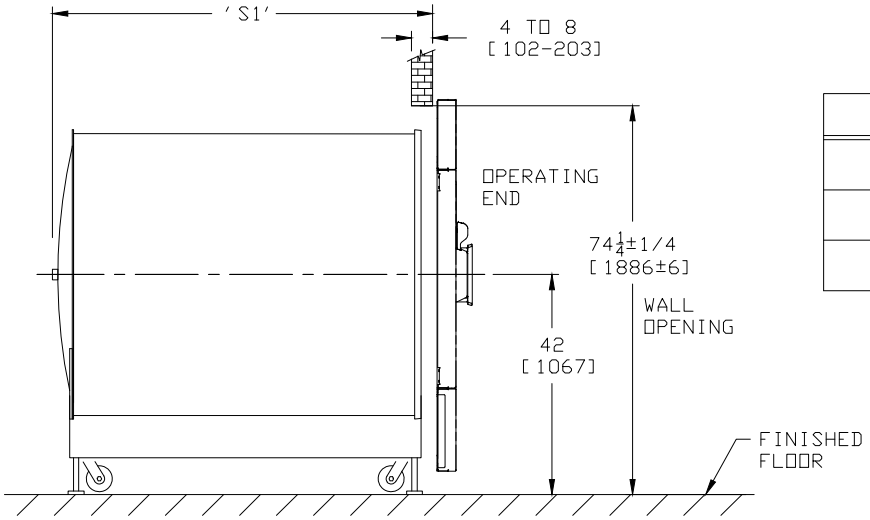


| SIZE | 'S' $^{+1/4}_{-0}$ ($^{+6}_{-0}$) | 'S1' |
|---|---|---|
| 26 X 37.5 X 36 (660 X 953 X 914) | 69 (1753) | 49 1/4 (1251) |
| 26 X 37.5 X 48 (660 X 953 X 1219) | 81 (2057) | 61 1/4 (1556) |
| 26 X 37.5 X 60 (660 X 953 X 1524) | 93 (2362) | 73 1/4 (1861) |

**SIDE VIEW**

SHT. 1 OF 6

| | | | |
|---|---|---|---|
| ALL DIMENSIONS ARE IN INCHES (MILLIMETERS) ALSO REFER TO GENERAL NOTES APPLICABLE TO EQUIPMENT DRAWINGS DWG. NO. 62941-091 | | **26 x 37.5 AMSCO 400 STER. PREVAC SINGLE (HINGE) DOOR RECESSED STEAM HEAT** | EQUIPMENT DRAWING NO. 129394-139 |
| STERIS® | STERIS Corporation Mentor, OH | | ITEM _____ LOCATION(S) _____ |

AUTOCAD. DWG.

REV. AC

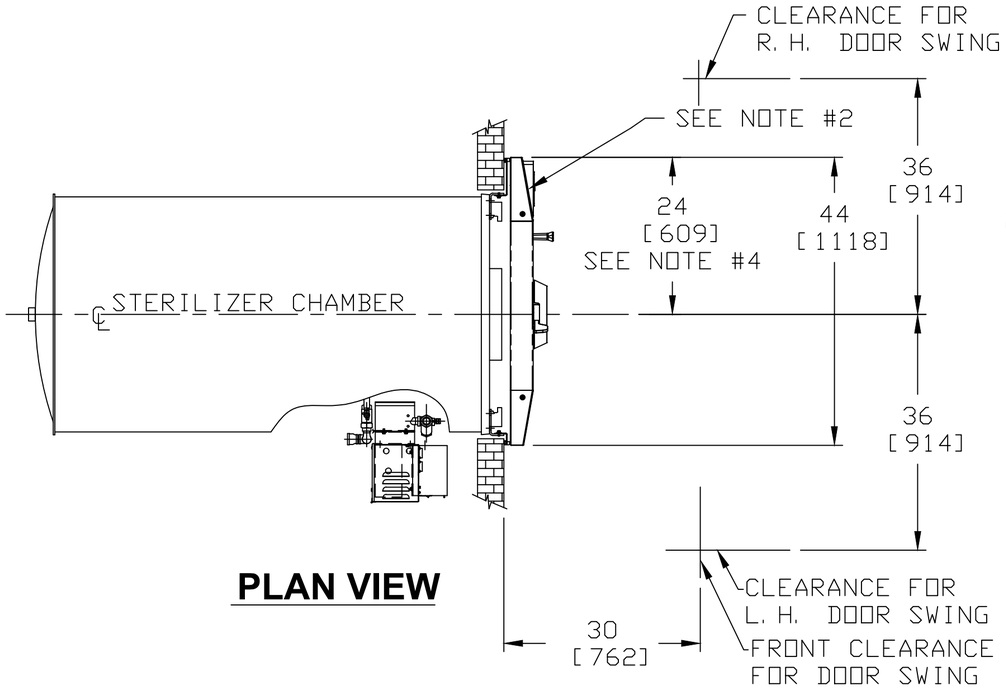


**PLAN VIEW**

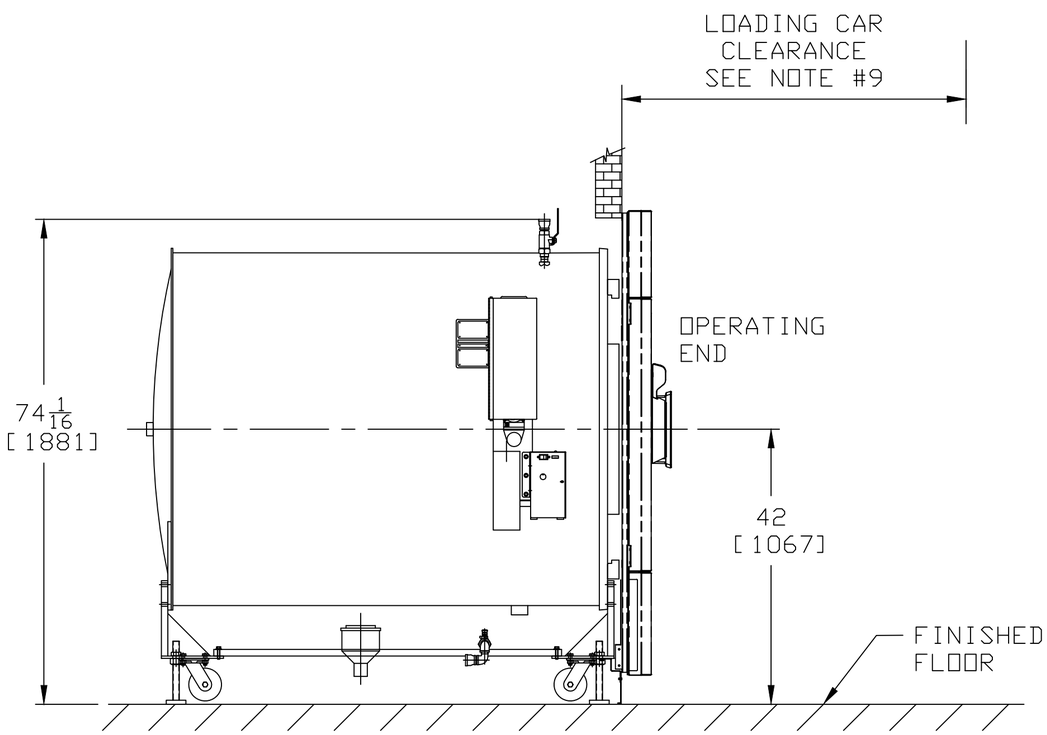


**SIDE VIEW**

## GENERAL NOTES:

1. UNIT WIDTH IS 37 1/2". DOOR OPENINGS IN FACILITY MUST BE 38" WIDE OR LARGER TO ACCOMODATE STERILIZER.
2. DISPLAY THIS SIDE FOR LH DOOR SWING AND OPPOSITE SIDE FOR RH DOOR SWING.
3. CURB WEIGHTS:
   26 X 37.5 X 36 SD VESSEL = 2866 LBS (1310 KG)
   26 X 37.5 X 48 SD VESSEL = 3053 LBS (1386 KG)
   26 X 37.5 X 60 SD VESSEL = 3428 LBS (1556 KG)
4. DIMENSIONS SHOWN FOR LH DOOR ONLY. FOR RH DOOR, DIMENSIONS WILL INTERCHANGE.
5. AIRFLOW GAP FROM CLEAN SIDE TO SERVICE AREA = 27.8 $IN^2$.
6. MAX. OPERATING WEIGHT BASED ON CHAMBER FULLY LOADED WITH WATER FLASKS:
   26 X 37.5 X 36 - 3800 LBS (1720 KG)
   26 X 37.5 X 48 - 4200 LBS (1901 KG)
   26 X 37.5 X 60 - 4700 LBS (2127 KG)
7. LEVELLING FEET ARE PROVIDED FOR PROPER INSTALLATION.
8. STERIS ASSUMES NO RESPONSIBILITY FOR CHANGES MADE NECESSARY THROUGH FAILURE TO OBSERVE THE SPECIFICATIONS ON EQUIPMENT DRAWING AND NOTE PAGES. SPECIFICATIONS AND DESCRIPTIONS ARE SUBJECT TO CHANGE WITHOUT NOTICE.
9. IF LOADING CAR AND CARRIAGE ARE TO BE USED, FRONT CLEARANCE SHOULD EQUAL TWICE THE LENGTH OF THE STERILIZER.

| SIZE inches (mm) | HEAT LOSS, BTU/HR (HINGED DOOR) VALUES ARE BASED ON PRE-VACUUM CONDITION | |
|---|---|---|
| | SINGLE DOOR | |
| | RECESSED | |
| | FRONT OF WALL | BACK OF WALL |
| 26 X 37.5 X 36 (660 X 953 X 914) | 2,675 | 6,880 |
| 26 X 37.5 X 48 (660 X 953 X 1219) | 2,675 | 7,565 |
| 26 X 37.5 X 60 (660 X 953 X 1524) | 2,675 | 8,250 |

SHT. 2 OF 6

ALL DIMENSIONS ARE IN INCHES (MILLIMETERS)
ALSO REFER TO GENERAL NOTES APPLICABLE TO EQUIPMENT DRAWINGS
DWG. NO. 62941-091

STERIS®

STERIS Corporation
Mentor, OH

**26 x 37.5 AMSCO 400 STER.**
**PREVAC**
**SINGLE (HINGE) DOOR**
**RECESSED**
**STEAM HEAT**

EQUIPMENT DRAWING NO.
129394-139

ITEM _____
LOCATION(S) _____

AUTOCAD. DWG.

REV. AC

## PLAN VIEW

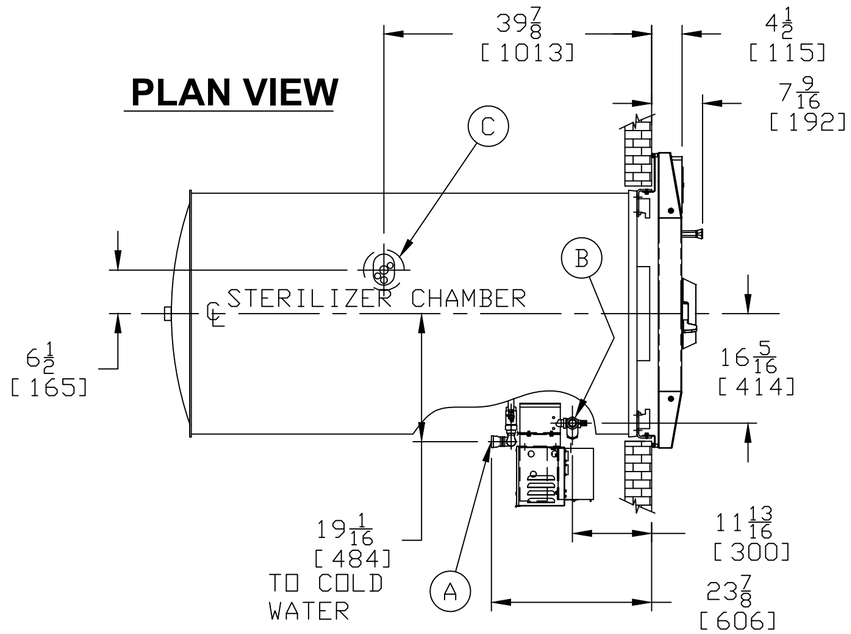


## PLUMBING CONNECTIONS DOMESTIC

(A) STERILIZER COLD WATER
(B) STERILIZER STEAM
(C) STERILIZER DRAIN

## NOTE:

1. SEE SHEET 4 FOR PLUMBING INSTALLATION SPECS AND PLUMBING REQUIREMENTS.

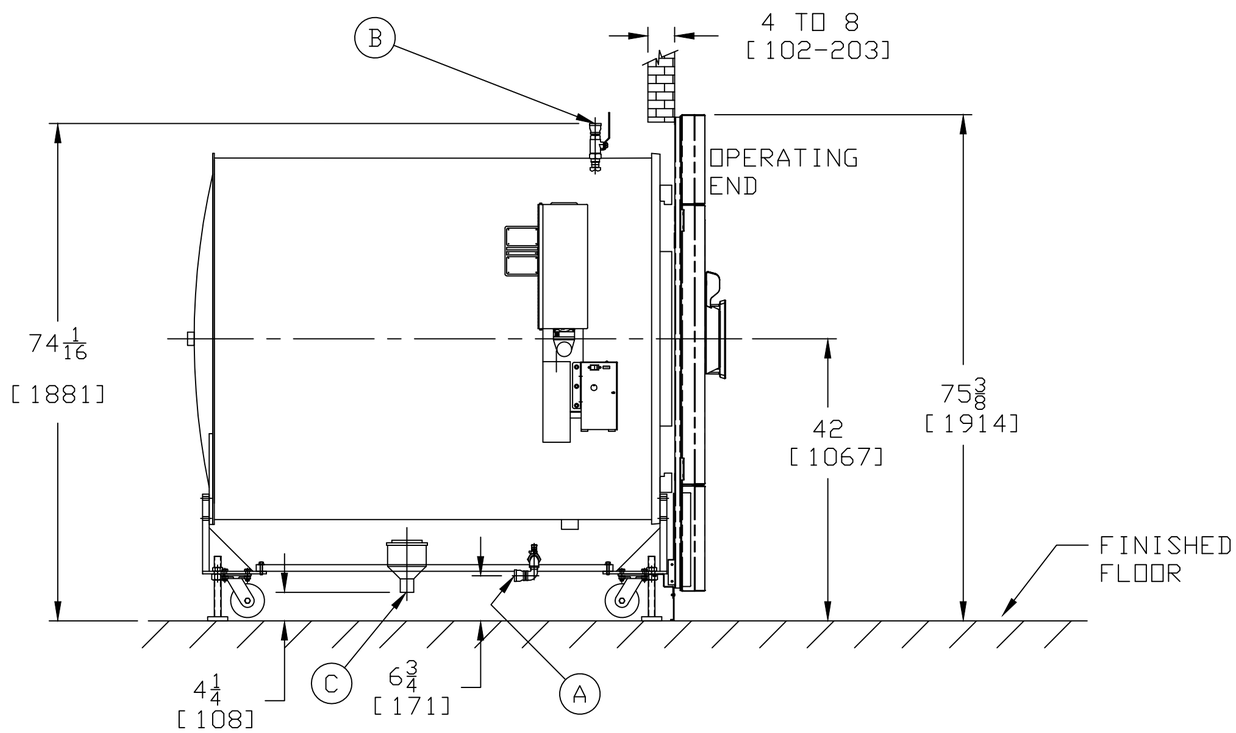


## SIDE VIEW

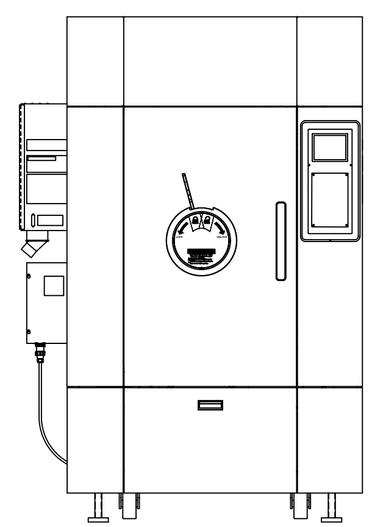

## FRONT VIEW

SHT. 3 OF 6

| | | | |
|---|---|---|---|
| ALL DIMENSIONS ARE IN INCHES (MILLIMETERS)<br>ALSO REFER TO GENERAL NOTES APPLICABLE TO EQUIPMENT DRAWINGS<br>DWG. NO. 62941-091 | | 26 x 37.5 AMSCO 400 STER.<br>PREVAC<br>SINGLE (HINGE) DOOR<br>RECESSED<br>STEAM HEAT | EQUIPMENT DRAWING NO.<br>129394-139 |
| STERIS® | STERIS Corporation<br>Mentor, OH | | ITEM _____<br>LOCATION(S) _____ |

AUTOCAD. DWG.

REV. AC

## INSTALLATION SPECIFICATIONS:

THE INSTALLATION OF THE AMSCO 400 STERILIZER MUST MEET ALL FEDERAL, STATE AND LOCAL REGULATIONS.

INSTALLATION SPECIFICATION IS LISTED AS ENGINEERING AND INSTALLATION GUIDES. REFERENCED COMPONENTS AND SERVICE CONNECTIONS ARE NOT FURNISHED AS PART OF EQUIPMENT UNLESS UNDER WRITTEN AGREEMENT WITH STERIS.

1. PIPE SIZES LISTED UNDER **PLUMBING REQUIREMENTS** INDICATE THE EQUIPMENT TERMINATION SIZES ONLY. SIZE PIPING TO EQUIPMENT DEPENDING ON LENGTH OF PIPE RUN FROM PRESSURE REGULATING STATION FOR STEAM LINE AND MAIN WATER HEADERS. TO SUPPLY THE SPECIFIED SERVICE PRESSURE AND FLOW RATE AT EQUIPMENT TERMINALS, INCLUDE EFFECT OF COINCIDENT DRAW OF MULTIPLE UNIT INSTALLATIONS.
2. PROVIDE PIPING, SHUT-OFF VALVE, PIPE PLUGGED TEE, AND UNION IN STEAM & WATER SUPPLY CONNECTION BETWEEN EQUIPMENT AND STUB OUTS. THESE SHOULD BE LOCATED WITHIN ROOM, BELOW CEILING, EASILY ACCESSIBLE FOR EMERGENCY SHUT OFF SITUATIONS. PLUGGED TEE CAN LATER BE USED FOR TEST PRESSURE GAUGE CONNECTION. ARRANGE CONNECTION PIPING TO ALLOW ACCESS TO MACHINE COMPONENTS AND ELECTRICAL CONTROL PANEL.
3. RECOMMEND PROVISION OF BLOW DOWN VALVE AT EACH STEAM AND WATER STRAINER TO ENABLE STRAINER CLEAN OUT.
4. FOR RECOMMENDED FEED WATER QUALITY FOR STERILIZERS SEE STERIS DWG. NO. 62941-091.
5. BLOW DOWN BUILDING STEAM & WATER SUPPLY LINES BEFORE FINAL CONNECTION TO EQUIPMENT.
6. THE STERILIZER IS NOT SUPPLIED WITH A VACUUM BREAKER OR BACKFLOW PREVENTER AND WHERE REQUIRED BY LOCAL CODES, INSTALLATION OF SUCH A DEVICE IN WATER LINE IS BY OTHERS.
7. **PLACEMENT OF PIPING SHUTOFFS:** WHEN INSTALLING; SHUTOFFS MUST BE LOCATED IN A SUITABLE LOCATION WITHIN LINE OF SIGHT AND CLEAR OF ANY OBSTRUCTIONS THAT WOULD PUT THE SERVICE PERSON IN **HARMS WAY** IN ORDER TO SHUT IT OFF.

## PLUMBING REQUIREMENTS-DOM. AND INT'L.

(A) STERILIZER COLD WATER (SEE NOTE #4):
SUPPLY TEMPERATURE REQUIREMENT IS 70°F (21°C) MAX.. VACUUM EFFICIENCY IS REDUCED AT WATER TEMPERATURES ABOVE 70°F (21°C).

20-50 PSIG DYNAMIC (1.38-3.45 BAR)
1" NPT
PEAK- 13 GPM (49.2 LPM)
CONSUMPTION:
AVERAGE-26 X 37.5 X 36 - 115 GPH (7.6 LPM)
26 X 37.5 X 48 - 120 GPH (8.0 LPM)
26 X 37.5 X 60 - 125 GPH (8.3 LPM)

(B) STERILIZER STEAM:

1" NPT
97 TO 100% VAPOR QUALITY.
DYNAMIC PRESSURE (SEE SHEET 2 NOTE 5):
MDD UNITS- 50-55 PSIG (3.45-3.79 BAR) DYNAMIC
NON-MDD UNITS - 50-80 PSIG (3.45-5.52 BAR) DYNAMIC
CONSUMPTION:
PEAK- 26 X 37.5 X 36 - 190 LB/HR (86 KG/HR)
AVERAGE- 26 X 37.5 X 36 - 112 LB/HR (51 KG/HR)
PEAK- 26 X 37.5 X 48 - 255 LB/HR (116 KG/HR)
AVERAGE- 26 X 37.5 X 48 - 148 LB/HR (67 KG/HR)
PEAK- 26 X 37.5 X 60 - 335 LB/HR (152 KG/HR)
AVERAGE- 26 X 37.5 X 60 - 185 LB/HR (84 KG/HR)

FACILITY MUST PROVIDE REGULATED STEAM PRESSURE IN THE DYNAMIC RANGE SPECIFIED. FAILURE TO DO SO WILL RESULT IN IMPROPER EQUIPMENT OPERATION (SEE SHEET 4 NOTE B).

(C) STERILIZER DRAIN TERMINAL: 2" ODT
(FLOOR DRAIN CAPACITY MUST HANDLE PEAK WATER CONSUMPTION).

SHT. 4 OF 6

| | | |
|---|---|---|
| ALL DIMENSIONS ARE IN INCHES (MILLIMETERS)<br>ALSO REFER TO GENERAL NOTES APPLICABLE TO EQUIPMENT DRAWINGS<br>DWG. NO. 62941-091 | **26 x 37.5 AMSCO 400 STER. PREVAC SINGLE (HINGE) DOOR RECESSED STEAM HEAT** | EQUIPMENT DRAWING NO.<br>129394-139 |
| STERIS<br>STERIS Corporation Mentor, OH | | ITEM _____<br>LOCATION(S) _____ |

AUTOCAD. DWG.

REV. AC

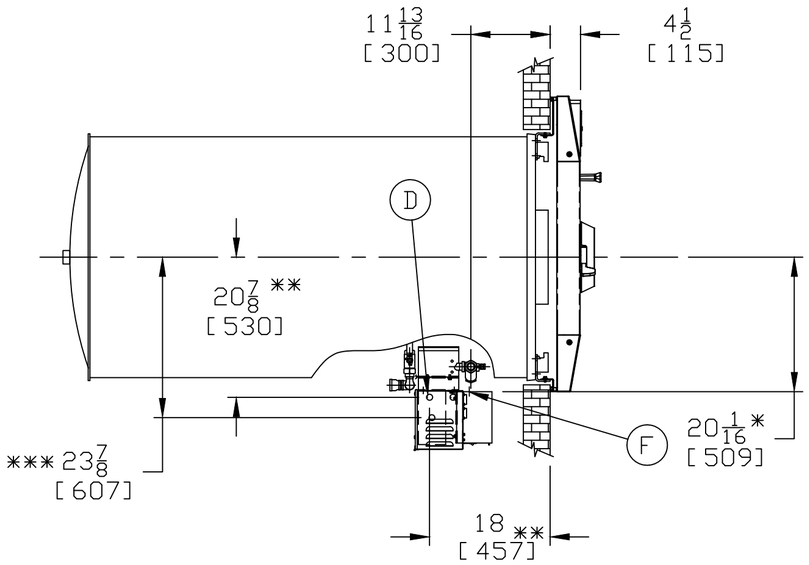


## PLAN VIEW

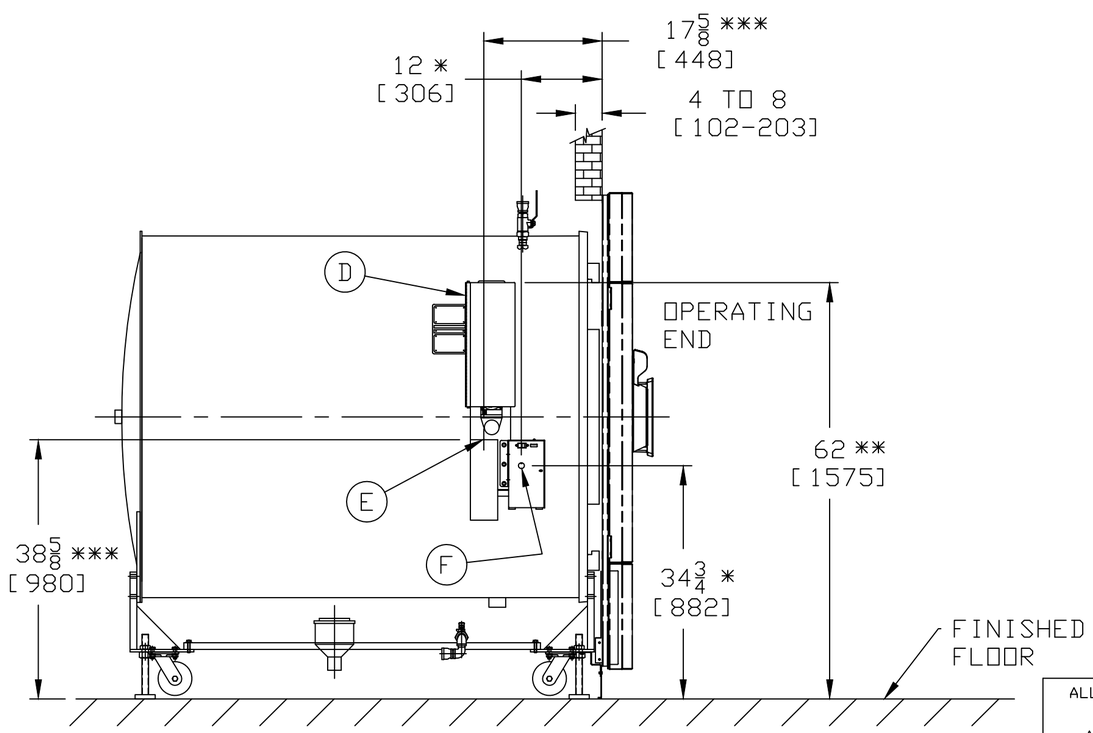


## SIDE VIEW

## ELECTRICAL CONNECTIONS-DOM. AND INT'L.

(D) STERILIZER CONTROL POWER
(E) STERILIZER VACUUM PUMP
(F) STERILIZER OPT. STEP DOWN TRANSFORMER POWER

**NOTE:** SEE SHEET 6 FOR ELECTRICAL INSTALLATION SPECS AND ELECTRICAL REQUIREMENTS.

* = TO TRANSFORMER BOX KNOCK OUT (F)
** = TO CONTROL BOX KNOCK OUT (D)
*** = TO POWER INPUT HOLE (E)

SHT. 5 OF 6

| | | | |
|---|---|---|---|
| ALL DIMENSIONS ARE IN INCHES (MILLIMETERS) ALSO REFER TO GENERAL NOTES APPLICABLE TO EQUIPMENT DRAWINGS DWG. NO. 62941-091 | | 26 x 37.5 AMSCO 400 STER. PREVAC SINGLE (HINGE) DOOR RECESSED STEAM HEAT | EQUIPMENT DRAWING NO. 129394-139 |
| STERIS® | STERIS Corporation Mentor, OH | | ITEM _____ LOCATION(S) _____ |

AUTOCAD. DWG.

REV. AC

## INSTALLATION SPECIFICATIONS:

1. PROVIDE GROUPED OR GANGED CIRCUIT PROTECTION AND DISCONNECT FOR CONTROL POWER (D) AND VACUUM PUMP POWER (E) AS REQUIRED BY NEC AND LOCAL CODES. INDIVIDUAL POWER SHUTOFFS RECOMMENDED NEAR EACH MACHINE FOR SERVICING.

2. PROVIDE GROUNDED METAL CONDUIT AND WIRING BETWEEN EQUIPMENT TERMINALS AND STUB OUTS OR DISCONNECTS. 14 AWG. MINIMUM SIZE RECOMMENDED.

3. FOR GENERAL INSTALLATION INFORMATION SEE STERIS DRAWING NO. 62941-091. (THIS DWG. SHOULD ALWAYS ACCOMPANY THE EQUIPMENT DWGS.) IF DWG IS NOT ATTACHED , CONTACT STERIS SERVICE ENGINEERING AT 1-800-333-8848 TO OBTAIN A COPY.

4. **PLACEMENT OF ELECT. DISCONNECTS**: WHEN INSTALLING; DISCONNECTS MUST BE LOCATED IN A SUITABLE LOCATION WITHIN LINE OF SIGHT AND CLEAR OF ANY OBSTRUCTIONS THAT WOULD PUT THE SERVICE PERSON IN **HARMS WAY** IN ORDER TO SHUT IT OFF. ALSO, THE LOCATION OF THE DISCONNECTS SHOULD ALLOW THE SERVICE PERSON TO SHUTOFF POWER FROM THE SIDE TO PREVENT POSSIBLE ARC FLASH.

## ELECTRICAL REQUIREMENTS-DOM. AND INT'L.

(D) STERILIZER CONTROL POWER:
DOMESTIC: 120V, 50/60HZ, 2A, SINGLE PHASE ELECTRIC SERVICE. MINIMUM 3A CIRCUIT BREAKER RECOMMENDED.

(E) STERILIZER PUMP POWER:
DOMESTIC: 208/240V, 50/60HZ, 6A, (3) PHASE. MINIMUM 8A CIRCUIT BREAKER RECOMMENDED.
OR 480V, 50/60HZ, 3A, (3) PHASE. MINIMUM 4A CIRCUIT BREAKER RECOMMENDED.
INTERNATIONAL: 400V, 50HZ, 4A, (3) PHASE. MINIMUM 5A CIRCUIT BREAKER RECOMMENDED.

(F) STERILIZER OPTIONAL STEP-DOWN TRANSFORMER POWER:
INTERNATIONAL: 230V, 50/60HZ, 1.5A, SINGLE PHASE ELECTRIC SERVICE. MINIMUM 2A CIRCUIT BREAKER RECOMMENDED.

SHT. 6 OF 6

| | | | |
|---|---|---|---|
| ALL DIMENSIONS ARE IN INCHES (MILLIMETERS)<br>ALSO REFER TO GENERAL NOTES APPLICABLE TO EQUIPMENT DRAWINGS<br>DWG. NO. 62941-091 | | **26 x 37.5 AMSCO 400 STER.<br>PREVAC<br>SINGLE (HINGE) DOOR<br>RECESSED<br>STEAM HEAT** | EQUIPMENT DRAWING NO.<br>129394-139 |
| STERIS® | STERIS Corporation<br>Mentor, OH | | ITEM _____<br>LOCATION(S) _____ |

AUTOCAD. DWG.

STERIS®

# AMSCO® CENTURY® MEDIUM STEAM STERILIZER 26 X 37.5" – NORTH AMERICA

## APPLICATION

Two configurations are available for sterilization of heat- and moisture-stable materials used in healthcare facilities:

- **Prevacuum –** designed for fast, efficient sterilization of heat- and moisture-stable materials. Prevacuum configuration sterilizers are equipped with prevacuum, gravity, liquid, leak test and daily air removal (Bowie-Dick) test cycles.
- **Steam Flush Pressure Pulse (SFPP) –** designed for fast, efficient sterilization of heat- and moisture-stable materials. This configuration uses the Steam Flush Pressure Pulse cycle, which features an above-atmospheric pressure level conditioning phase. SFPP sterilizers are equipped with SFPP, WRAP/SFPP (for wrapped items), prevacuum, gravity, liquid, leak test and daily air removal (Bowie-Dick) test cycles.

Hinged-Door Model

Horizontal Sliding-Door Model

(Typical only - some details may vary.)

## DESCRIPTION

Amsco Century Medium Steam Sterilizers are equipped with the latest features in both state-of-the-art technology and ease of use.

### Primary Product Features

### Interior Chamber Dimensions

- 26 x 37.5 x 36" (660 x 950 x 910 mm)
- 26 x 37.5 x 48" (660 x 950 x 1220 mm)
- 26 x 37.5 x 60" (660 x 950 x 1520 mm)

### The Selections Checked Below Apply To This Equipment

**Type**

☐ Prevacuum
☐ Steam Flush Pressure Pulse (SFPP)

**Size**

☐ 26 x 37.5 x 36" (660 x 950 x 910 mm, single door only)
☐ 26 x 37.5 x 48" (660 x 950 x 1220 mm)
☐ 26 x 37.5 x 60" (660 x 950 x 1520 mm)

**Steam Source**

☐ Building Steam

**Vacuum Pump Electric Service**

☐ 208/240 VAC, 60 Hz, 3-Phase, 6A per phase
☐ 480 VAC, 60 Hz, 3-Phase, 3A per phase

**Door Configuration**

☐ **Single-Door**
- ☐ Hinged
- ☐ Horizontal-Sliding

*Select direction of door swing or slide to open, as viewed from the sterilizer operating end:*
- ☐ Left-Hand
- ☐ Right-Hand (not available for sliding-door units)

☐ **Double-Door***
- ☐ Hinged Door

*NOTE: Operating End hinge position listed first; Non-operating End hinge listed second.*
- ☐ Right-Hand/Left-Hand
- ☐ Right-Hand/Right-Hand
- ☐ Left-Hand/Right-Hand
- ☐ Left-Hand/Left-Hand

☐ Horizontal-Sliding Door

*NOTE: Operating end slide direction listed first; Non-operating end slide direction listed second.*
- ☐ Left-Hand/Right-Hand

**Single-door Mounting**

☐ Cabinet Enclosed/Freestanding
☐ Recessed

**Double-door Mounting**

☐ Recessed through One Wall
☐ Recessed through Two Walls

* *26 x 37.5 x 36" sterilizers not available in double-door configuration.*

**Accessories**

☐ 36" (910 mm) Chamber Length
☐ 48" (1220 mm) Chamber Length
☐ 60" (1520 mm) Chamber Length
- ☐ Loading Car
- ☐ Transfer Carriage
- ☐ Chamber Track Assembly
- ☐ Single Door ☐ Double Door

☐ Loading Car, Transfer Carriage, and Track Assembly
- ☐ Single Door ☐ Double Door

☐ (36" Units only) Chamber Rack and Shelf
☐ Seismic Tie-Down Kit

**Remote Monitoring**

☐ ProConnect® Response Center (Remote Monitoring, Priority Technical Support, Customer Care Center Access, Equipment Performance Reports)

Item _____

Location(s)_____

_____

48" and 60" configurations include the choice of a single or double door; 36" configuration provides single door only.

- **Hinged door** with fast operating, low-effort door lock mechanism. Door handle lock lever requires a single 30° handle movement to lock or unlock.
- **Horizontal-sliding door** with quiet, motor-driven cable and pulley mechanism. Door travels horizontally right to left to open, and is controlled from the touch screen.

**Century control system** with enhanced functionality and user-friendly interface screen.

- Touch-sensitive screen with 30-line x 40-character display area.
- Ink-on-paper impact printer.
- Help screens for programming and troubleshooting alarm conditions.
- Automatic check of control program and cycle data maintains process integrity.
- Vacuum pump is supplied on all units to pull the chamber to specified vacuum levels effectively, as well as reduce water consumption.

## STANDARDS

Each sterilizer meets the applicable requirements of the following listings and standards, and carries the appropriate symbols:

- **Underwriters Laboratory (UL) Standard 61010-1** as certified by ETL Testing Laboratories, Inc.
- **Canadian Standards Association (CSA) Standard C22.2, No. 1010.**
- **ASME Code, Section VIII, Division 1** for unfired pressure vessels. The pressure vessel is so stamped; ASME Form U-1 is furnished. Shell and door are constructed to withstand working pressure of 45 psig (3.1 bar).

## FEATURES

**26 x 37.5" chamber cross-section** is sized to allow for efficient, high-volume processing of sterilization.

**Fast-operating, low-effort manual door lock mechanism** (hinged-door models) allows door to be locked or unlocked using a single 30° handle motion.

**Horizontal-sliding power door** is controlled from the touch screen display. The door slides horizontally on a rigid rail assembly housed within stainless-steel paneling. Door drive system consists of a cable and pulley arrangement driven by an electric motor.

**Resistive Thermal Detectors (RTD)** are installed for sterilizer temperature control. The dual element chamber drain line RTD senses and controls temperature variations within the sterilizer chamber. A jacket RTD provides temperature control within the jacket space. These RTD signals, converted into electrical impulses, provide accurate control inputs and readouts throughout the entire cycle.

**Electronic water saving control** includes an RTD to control the amount of water used in condensing the exhausted chamber steam.

**Software calibration** is performed in the service mode, accessible through the touch screen displays, and accomplished using external or internal temperature and pressure sources. Control system provides a printed record of all calibration data for verification to current readings.

**Automatic utilities start-up/shutdown** permits utilities conservation. Shutdown may be programmed to activate at the end of any designated cycle or time of day. When activated, the control system automatically shuts off all utility valves, conserving steam and water usage. Sterilizer utilities can be restarted either by programmed time or manual operation. A different shutdown and restart time can be programmed for each day.

**Steam purge** feature is provided to assist in air removal and to preheat the load.

**Two-piece insulation sleeve** is fitted around the exterior of the sterilizer vessel. The sleeve is sealed and held in place by hook-and-loop closures. Insulation is asbestos-free and chloride-free, silicone impregnated, oil- and water-resistant fiberglass.

**Lighted DIN connectors** are installed on all steam, water and exhaust valves, for reliability and ease of maintenance.

**ProConnect® Response Center** - Minimize response time and minimize unscheduled downtime on your equipment. Secure, internet-based, 24/7 remote monitoring enables both Predictive Maintenance as well as instant alert to STERIS when there is an equipment alarm. Also included are priority technical support, online parts ordering, equipment performance dashboards and scheduling service at eservice.steris.com.

## PROCESSING CYCLES

All processing cycles factory programmed into the sterilizer control have been validated to **AAMI ST8.**

**Prevacuum** configuration sterilizers are factory programmed with the following cycles: 270°F (132°C) Prevacuum (with either 5-minute or 20-minute dry phases), Gravity, Liquid, 275°F (135°C) Prevacuum and Test Cycles.

**SFPP** configuration sterilizers are factory programmed with the following cycles: WRAP/SFPP, SFPP, Prevacuum, Gravity, Liquid and Test Cycles.

See cycle descriptions below for more details:

- **270°F (132°C) Prevacuum Cycle:** For efficient, high-volume processing of heat- and moisture-stable materials, such as fabrics and wrapped hard goods. This process incorporates a series of pressure/vacuum pulses to condition the load prior to sterilization.
  - » Sterilize temperature: 270°F (132°C)
  - » Sterilize time: 4 minutes
  - » Dry time: 5 minutes or 20 minutes
- **250°F (121°C) Gravity Cycle:** For sterilizing fabrics.
  - » Sterilize temperature: 250°F (121°C)
  - » Sterilize time: 30 minutes
  - » Dry time: 15 minutes

*NOTE: A gravity cycle, adjusted to 270°F for 25-minute sterilize exposure time, can be used for processing fabric packs.*

- **270°F (132°) Gravity Cycle:** For sterilizing hard goods.
  - » Sterilize temperature: 270°F (132°C)
  - » Sterilize time: 15 minutes
  - » Dry time: 30 minutes

*NOTE: 270°F temperature must be set by the user.*

*NOTE: **SFPP Cycle:** For efficient, high-volume processing of porous loads. This process incorporates a series of steam flushes and pressure pulses at pressures above atmospheric levels to condition load prior to sterilization.*

» Sterilize temperature: 270°F (132°C)

» Sterilize time: 4 minutes

» Dry time: 20 minutes

- **WRAP/SFPP Cycle:** For efficient, high-volume processing of heat- and moisture-stable materials, such as double-wrapped instrument trays. This process incorporates a series of steam flushes and pressure pulses at pressures above atmospheric levels to condition load prior to sterilization.
  - » Sterilize temperature: 270°F (132°C)
  - » Sterilize time: 4 minutes
  - » Dry time: 20 minutes
- **Liquid Cycle:** This cycle is used for sterilizing liquids in borosilicate containers with vented closures.
  - » Sterilize temperature: 250°F (121°C)
  - » Factory programmed sterilize time: 45 minutes
  - » Dry time: not applicable

**Important:** It is inappropriate for a healthcare facility to sterilize liquids for direct contact with patients.

- **275°F (135°C) Prevacuum Cycle:** This cycle is used for efficient, high-volume processing of heat- and moisture-stable materials in double-wrapped instrument trays. This process incorporates a series of pressure/vacuum pulses to condition the load prior to sterilization.
  - » Sterilize temperature: 275°F (135°C)
  - » Sterilize time: 3 minutes
  - » Dry time: 16 minutes

## TESTING CYCLES

- **Vacuum Leak Test:** This cycle is used for testing the vacuum integrity of the sterilizer piping. Sterilizer chamber must be empty while running this test cycle. Preprogrammed cycle parameters cannot be adjusted by the user.
- **Dart® (Bowie-Dick) Test Cycle:** This cycle is used to conduct a Bowie-Dick test on the sterilizer. Recommended load is a STERIS Dart® pack, or a properly prepared Bowie-Dick test pack. Preprogrammed cycle parameters cannot be adjusted by the user.
  - » Sterilize temperature: 270°F (132°C)
  - » Sterilize time: 3.5 minutes
  - » Dry time: 1 minute

## CONTROL SYSTEM

### Design Features

**Century Control System** monitors and controls all sterilizer operations and functions. The control system is factory-programmed with standard sterilizing cycles. All operator-accessible control functions can be changed using the touch screen control.

**Important:** If factory-programmed cycle values are changed, it is the responsibility of the healthcare facility to validate the efficacy of the changed cycle.

Cycle values and operating features may be adjusted and verified prior to cycle operation. Cycle parameters are retained in the control memory for repeated use.

Once the cycle is started, cycles and cycle values cannot be changed until the cycle is complete. If the chamber temperature drops below the set point during the exposure phase, the timer is set to stop and automatically reset once normal operating temperature is reached.

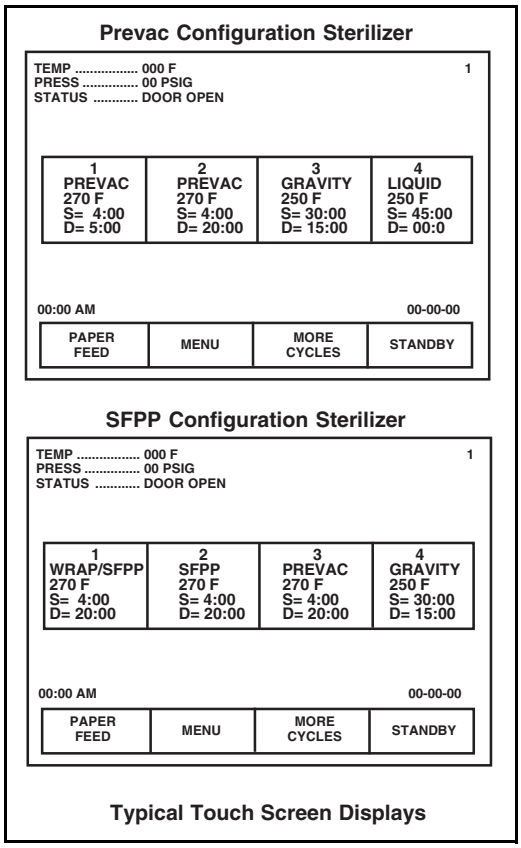

Typical Touch Screen Displays

Critical control system components are housed within a sealed compartment to protect the components from moisture and heat generated during the sterilization process. A cooling fan with filter is installed in the housing compartment to maintain positive pressure within the compartment, keeping components cool and dust-free.

**Operator interface control panel**, consisting of a touch screen and impact printer, is located on the operating (i.e., load or non-sterile) end of the sterilizer. If the sterilizer is equipped with double doors, an additional touch screen is provided on the sterilizer's non-operating (i.e., unload or sterile) end.

- **Touch-Sensitive Screen** features a 30-line x 40-character graphics display. All sterilizer functions, including cycle initiation and cycle configuration, are operated by pressing the touch-sensitive areas on the display, referred to as "touch pads." Display indicates appropriate control buttons, operator prompts and status messages necessary to assist in sterilizer operation. All displayed messages are complete phrases, with no codes to be cross-referenced. Display also indicates any abnormal conditions that may exist either in or out of a cycle.
- **Ink-On-Paper Impact Printer,** located above touch screen, provides an easy-to-read printed record of all pertinent cycle data on 2-1/4" wide paper. Data is automatically printed at the beginning and end of each cycle and at transition points during the cycle.

  Printer take-up spool stores an entire roll of paper, providing cycle records which can be saved for future reference. Three paper tape rolls and two printer ribbons are furnished with each unit.

**Non-Operating End (NOE) Control Panel,** equipped on double-door sterilizers only, includes a touch-sensitive screen similar to the operating end screen. Preprogrammed cycles can be started from the NOE control panel. Display concurrently shows the same information as the operating end screen display.

**Cycle Configuration** is performed by accessing the change values menu through the operating end touch screen. In addition to adjustment of cycle values, the following operating parameters can also be changed through the change values menu:

- **Time Display and Printout Units** AM/PM or 24-hour notation.
- **Access Code** requires entry of a four-digit access code to operate the sterilizer and/or change the cycle values. Operating the sterilizer or accessing the Change Values menu causes the display to request the entry of an access code. If the access code is not properly entered, the display returns to the standby or main menu screen, denying user access to the sterilizer or programming.
- **Audible Signals** are adjustable. **Touch pad** and **end-of-cycle signals** can be adjusted to one of four sound levels (off, low, medium or high) as required for the operating environment. The **alarm signal** can be adjusted to low, medium or high (it cannot be turned off).
- **Print Format** allows selection of either a full or condensed printout of the cycle information during processing.
- **Temperature Display and Printout Unit** are in Fahrenheit (°F) or Celsius (°C). Temperature is set, displayed, controlled and printed to the nearest 1°. Recalibration is not required when changing temperature units.
- **Pressure/Vacuum Display and Printout Units** in psig/In Hg or bar. Recalibration is not required when changing pressure units.

### Technical Data

The control system consists of microcomputer control boards and peripheral function circuit boards located within the control PC board housing.

**Internal battery** backs up all cycle memory for up to 10 years. If a power failure occurs during a cycle, the battery backup system assures that cycle memory will be retained and proper cycle completion will occur once power is restored. When power is lost, the cycle is held in phase until power is restored. Once power returns, the event is recorded on the printout, and the cycle automatically resumes or restarts, depending on what phase the cycle was in at the time of power loss. The operator can manually abort the cycle, if necessary.

## SAFETY FEATURES

**Control lockout switch,** equipped on the chamber door, senses when the door seal is energized and tight against the door. The control prevents the cycle from starting until the limit switch signal is received. If the control loses the appropriate signal during the cycle, the alarm activates, the cycle aborts, and the chamber safely vents with a controlled exhaust.

**Chamber float switch** activates the alarm, aborts the cycle, and safely vents the chamber with a controlled exhaust if excessive condensate is detected in the vessel chamber.

**Pressure relief valve** limits the amount of pressure buildup so that the rated pressure in the vessel is not exceeded.

**Power door safety feature** causes the door drive to slip if the sliding door encounters an obstruction during movement.

## CONSTRUCTION

### Shell Assembly

Two fabricated Type 316L stainless-steel shells, welded one within the other, form the sterilizer vessel. Type 316L stainless-steel end frame(s) is welded to the door end. On single door units, the back of the chamber is fitted with a welded 316L stainless-steel dished head.

Sterilizer vessel is ASME rated at 45 psig (3.1 bar) and insulated. The vessel includes one 1"-NPT chamber port for Customer use.

Steam-supply opening inside the chamber is shielded by a stainless-steel baffle.

### Chamber Door(s)

Door is constructed of Type 316L stainless steel.

During cycle operation, the door is sealed by a steam-activated door seal. Door seal is constructed of a special long-life rubber compound. When the sterilize cycle is complete, the seal retracts (under vacuum) into a machined groove in the sterilizer end frame.

A long-life proximity switch is used by the control to determine if the door is closed, or locking plates are engaged. An additional seal pressure switch prevents inadvertent cycle initiation if the door is not sealed.

The door assembly is equipped with a mechanical locking mechanism that assures the door cannot be opened as long as the seal is intact and energized, and more than 2 psi (0.14 bar) pressure is in the chamber.

The sterilizer door is fitted with a stainless-steel panel that insulates the operator from the chamber end frame, reducing the chance of accidental contact with a hot metal surface.

### Chamber Drain System

Drain system is designed to prevent sterilizer effluent from entering the water-supply system and sterilizer. The automatic condensing system, consisting of a stainless-steel plate-type condenser, converts chamber steam to condensate, and disposes condensate to waste. Cooling water flow is regulated by the waste line RTD to minimize water usage. Water supply shut off valve is located in the recessed area of the unit.

### Vacuum System

Vacuum pump reduces chamber pressure during prevacuum and post-drying phases. Air is drawn from the chamber through the vacuum system. Following the dry phase, the chamber vacuum is relieved to atmospheric pressure by admitting air through a bacteria-retentive filter.

### Steam Source

Sterilizers are piped, valved and trapped to receive building-supplied steam delivered at 50 to 80 psig (3.5 to 5.6 bar) dynamic. Steam piping is constructed of brass and includes a shut-off valve, steam strainer, and a pressure regulator.

### Piping

All piping connections terminate within the confines of the sterilizer and are accessible from front and left side of sterilizer.

- **Solenoid Valves** with DIN connectors simplify sterilizer piping, and can be serviced individually.
- **Manual Shut-off Valves** are pressure rated at 125 psig (8.62 bar) for saturated steam. Valve handles are low-heat conducting.

## MOUNTING ARRANGEMENT

Sterilizers are arranged for either freestanding or recessed installation, as specified. Each sterilizer is height-adjustable. Sterilizer subframe is equipped with a synthetic rubber gasket to provide a tight fit between the cabinet panels on freestanding units, or between the front cabinet panel and wall partition on recessed units.

On freestanding units, stainless-steel side panels and a louvered top panel enclose the sterilizer body and piping.

## ACCESSORY

**Seismic Tie-Down Kit** conforms to Title 24 California Code of Regulations, 2001 Amendment Section 1632(A).

**Material Handling Accessories** include stainless-steel chamber tracks and stainless-steel loading cars with painted-steel carriages. Stainless-steel chamber rack and shelf are available for 36" (910 mm) sterilizers. See tech data SD555 for details.

## PREVENTIVE MAINTENANCE

A global network of skilled service specialists can provide periodic inspections and adjustments to help ensure low-cost peak performance. STERIS representatives can provide information regarding annual maintenance agreements.

## NOTES

1. The sterilizer is not supplied with a vacuum breaker or back-flow prevention device and, where required by local codes, installation of such a device in the water line is the responsibility of the Customer.
2. Pipe sizes shown indicate terminal outlets only. Building service lines, provided by third parties, must supply the specified pressures and flow rates.
3. Disconnect switches (with OFF position lockout only; by third parties) should be installed in electric supply lines near the equipment.
4. Access to the recessing area from the control end of the sterilizer is recommended.
5. Clearances shown are minimal for installing and servicing the equipment.
6. Depending on the loading equipment used, additional clearance is required:
   - If shelves are used, clearance should be length of the sterilizer plus 24" (610 mm) at each door.
   - If loading car and carriage will be used, clearance should be twice the length of the sterilizer at each door.
7. Floor drain should be provided within confines of the sterilizer framework.
8. Units require a minimum 38" (966 mm) door opening for transport within facility prior to installation.

## UTILITY REQUIREMENTS

### Steam

1" NPT, 50 to 80 psig (3.5 to 5.6 bar) dynamic, 97% to 100% vapor quality.

### Drain

2" ODT drain terminal. (Floor drain capacity must handle peak water consumption; refer to Engineering Data.)

### Electrical–Controls

120 Volt, 50/60 Hz, 1-phase, 2.0 Amp.

### Electrical–Vacuum Pump

- 208/240 Volt, 50/60 Hz, 3-phase, 6 Amp per phase.
- 480 Volt, 50/60 Hz, 3-phase, 3 Amp per phase.

### Sterilizer Feed Water

1" NPT, 20 to 50 psig (1.4 to 3.5 bar) dynamic. Water is used for vacuum pump, heat exchanger and trap cooling. Refer to *Water Quality Recommendations* listed on page 7.

*NOTE: Back-flow prevention is by third parties; not supplied on unit.*

### Telecommunications Requirements for ProConnect® Response Center

- An active wired or wireless TCP/IP network, 10/100BaseT Ethernet connection at each piece of connected equipment, Internet access and an IP address on the facility network.
- 5 GB of available hard drive space to run the service agent. Can be installed on:
  - » Dedicated PC running Windows XP with 2.8GHz processor, 512MB of RAM
  - » Virtual Machine
  - » Server
- Local STERIS login at the PC with a username of STERIS and the password should be ProConnect (STERIS Customer Number).
- Ethernet cable to connect each piece of STERIS equipment and the dedicated PC to the facility network.

**CUSTOMER IS RESPONSIBLE FOR COMPLIANCE WITH APPLICABLE LOCAL AND NATIONAL CODES AND REGULATIONS.**

**The base language of this document is ENGLISH. Any translations must be made from the base language document.**

| Reference the following equipment drawing for installation details. | |
|---|---|
| **Equip. Dwg. No.** | **Equipment Drawing Title** |
| 65435-775 | 26 x 37.5 Amsco Century Ster. Prevac OR SFPP Single (Hinge) Door Recessed Steam Heat |
| 65435-776 | 26 x 37.5 Amsco Century Ster. Prevac OR SFPP Single (Hinge) Door Cabinet Steam Heat |

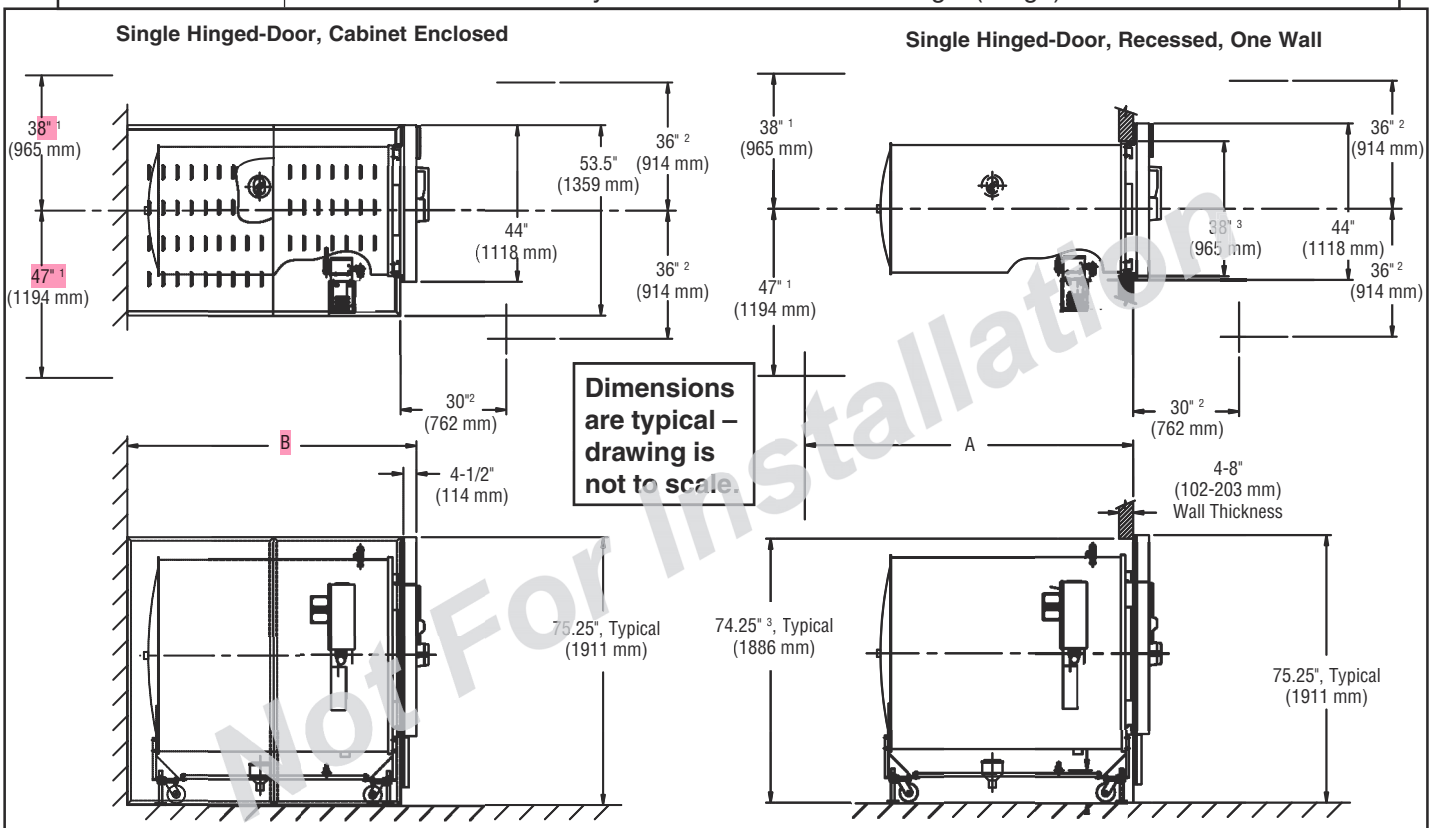


[1] *Service Clearance - new construction only. Unit may be installed into existing Amsco brand 24" x 36" sterilizer space (Medallion, Eagle 2000, Eagle 3000) without facility modification.*

[2] *Door Swing (left hand swing shown)*

[3] *Wall Opening*

## ENGINEERING DATA

| | |
|---|---|
| **Drain:** | 2" ODT drain terminal (floor drain capacity must handle peak water consumption.) |
| **Electric:** | Control: 120 volt, single phase, 50/60 Hz, 2 A<br>Vacuum Pump:<br>• 208/240, 3 phase, 50/60 Hz, 6 A per phase, or<br>• 480 volt, 3 phase, 50/60 Hz, 3 A per phase |
| **Steam:** | Pressure: 50 to 80 psig (3.45 to 5.52 bar), dynamic, condensate free, and 97% to 100% vapor quality<br>Consumption: 26 x 37.5 x 36" (660 x 950 x 910 mm) - 112 lbs/hr (51 kg/hour) Peak Flow–190 lbs/hr (86 kg/hour)<br>26 x 37.5 x 48" (660 x 950 x 1220 mm) - 148 lbs/hr (67 kg/hour) Peak Flow–255 lbs/hr (116 kg/hour)<br>26 x 37.5 x 60" (660 x 950 x 1520 mm) - 185 lbs/hr (84 kg/hour) Peak Flow–335 lbs/hr (152 kg/hour)<br>Size: 1" NPT |
| **Water[a]:** | Pressure: 20 to 50 psig (1.38 to 3.45 bar), dynamic<br>Consumption: 130 gal/hr (495 L/hour)<br>Peak Flow: 15 gal/min (57 L/min)<br>Size: 1" NPT |
| **Operating Weight[b]:** | 26 x 37.5 x 36" (660 x 950 x 910 mm) 3800 lb (1720 kg)<br>26 x 37.5 x 48" (660 x 950 x 1220 mm) 4200 lb (1900 kg)<br>26 x 37.5 x 60" (660 x 950 x 1520 mm) 4700 lb (2125 kg) |

*a. Water consumption data is based on running one fully loaded Prevac cycle per hour and the machine idling for the remainder of the hour.*
*b. Operating weight includes a full load in the chamber.*

| Reference the following equipment drawing for installation details. | |
|---|---|
| **Equip. Dwg. No.** | **Equipment Drawing Title** |
| 65435-777 | 26 x 37.5 Amsco Century Ster. Prevac OR SFPP Double (Hinge) Door Recessed One Wall Steam Heat |
| 65435-778 | 26 x 37.5 Amsco Century Ster. Prevac OR SFPP Double (Hinge) Door Recessed Two Walls Steam Heat |

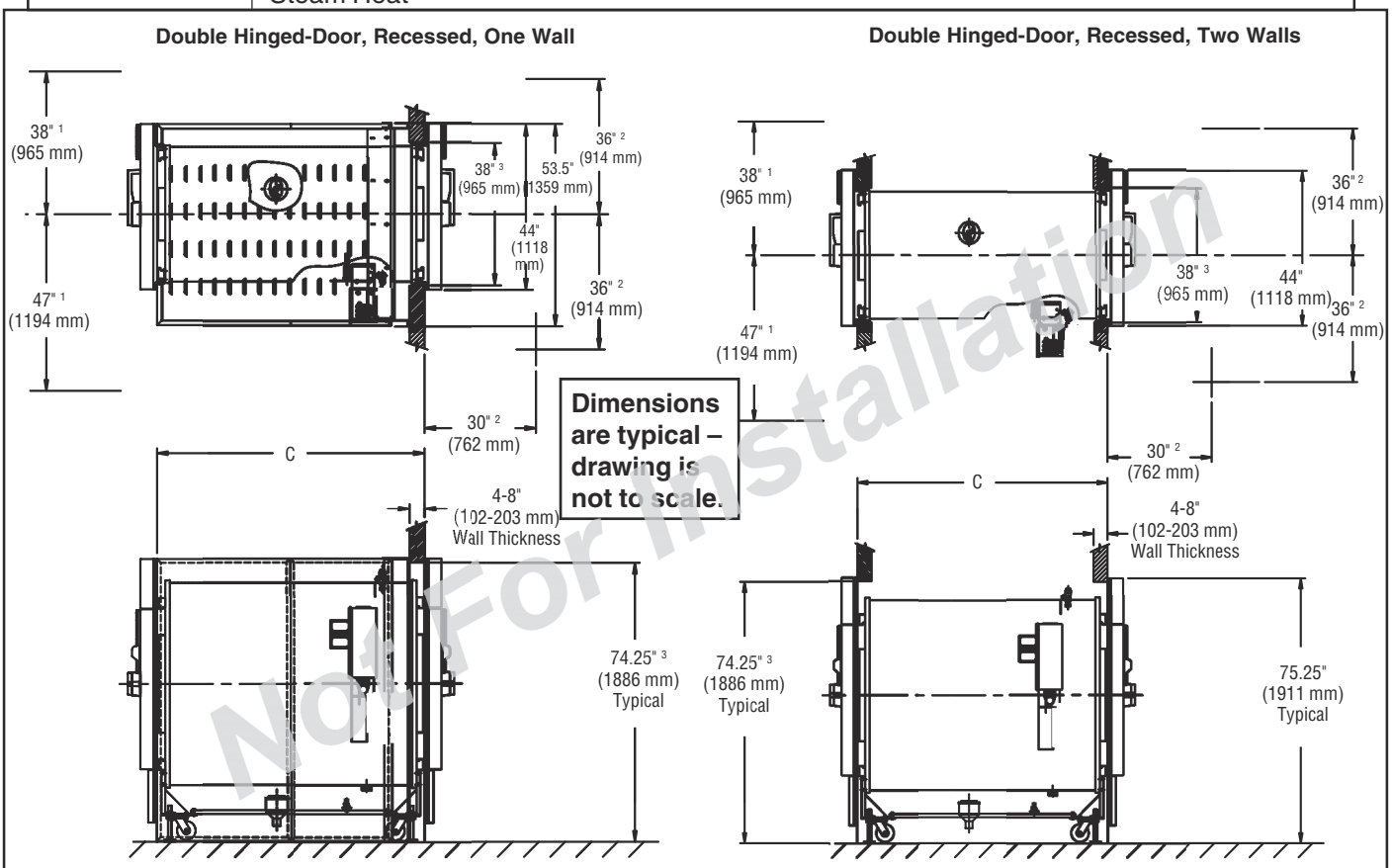


1 *Service Clearance - new construction only. Unit may be installed into existing Amsco brand 24" x 36" sterilizer space (Medallion, Eagle 2000, Eagle 3000) without facility modification.*

2 *Door Swing (left hand swing shown)*

3 *Wall Opening*

## OVERALL INSTALLED LENGTH

*Refer to Illustrations*

| | Chamber Length | | |
|---|---|---|---|
| | **36" (914 mm)** | **48" (1219 mm)** | **60" (1524 mm)** |
| **A** | 69" (1753 mm) | 81" (2057 mm) | 93" (2362 mm) |
| **B** | 58" (1473 mm) | 70" (1778 mm) | 82" (2082 mm) |
| **C** | 48: (1219 mm) | 60" (1524 mm) | 72" (1829 mm) |
| **D** | 59" (1499 mm) | 71" (1803 mm) | 83" (2108 mm) |
| **E** | 71-1/2" (1816 mm) | 83-1/2" (2121 mm) | 95-1/2" (2425 mm) |
| **F** | 53-1/4" (1352 mm) | 62-1/4" (1657 mm) | 77-1/4" (1762 mm) |

### WATER QUALITY RECOMMENDATIONS

| Condition | Nominal Conditions | Maximum Conditions |
|---|---|---|
| **Temperature** | 40°-60°F (4°-16°C) | 70°F (21°C) |
| **Total Hardness as $CaCO_3$[a]** | 50-120 mg/L | 171 mg/L |
| **Total Dissolved Solids** | 100-200 mg/L | 500 mg/L |
| **Total Alkalinity as $CaCO_3$** | 70-120 mg/L | 180 mg/L |
| **pH** | 6.8-7.5 | 6.5-8.5 |
| **Total Silica** | 0.1 - 1.0 mg/L | 2.5 mg/L |

*a. 17.1 mg/L = 1.0 grain hardness*

| Reference the following equipment drawings for installation details. | |
|---|---|
| **Equip. Dwg. No.** | **Equipment Drawing Title** |
| 65435-779 | 26 x 37.5 Amsco Century Ster. Prevac OR SFPP Single (Sliding) Door Cabinet Steam Heat |
| 65435-780 | 26 x 37.5 Amsco Century Ster. Prevac OR SFPP Single (Sliding) Door Recessed Steam Heat |
| 65435-781 | 26 x 37.5 Amsco Century Ster. Prevac OR SFPP Double (Sliding) Door Recessed One Wall Steam Heat |
| 65435-783 | 26 x 37.5 Amsco Century Ster. Prevac OR SFPP Double (Sliding) Door Recessed Two Walls Steam Heat |

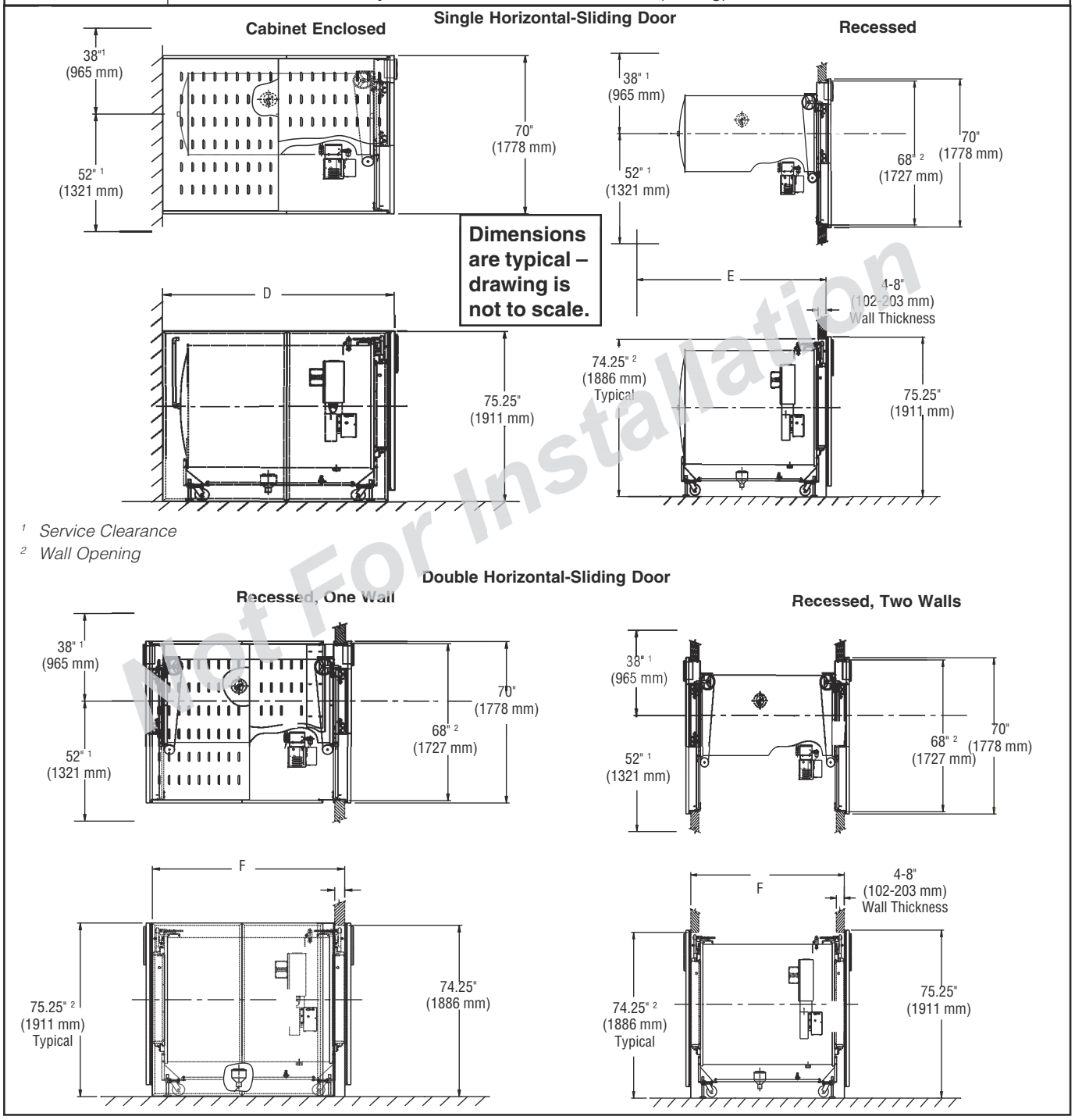


[1] *Service Clearance*
[2] *Wall Opening*

Not For Installation

## For further information, contact:

STERIS®

STERIS Corporation
5960 Heisley Road
Mentor, OH 44060-1834 • USA
440-354-2600 • 800-548-4873
www.steris.com

SD724 ©2010, STERIS Corporation. All rights reserved. (11/01/10)

*This document is intended for the exclusive use of STERIS Customers, including architects or designers. Reproduction in whole or in part by any party other than a Customer is prohibited.*

# APPENDIX II

## VIDMAR STORAGE SOLUTIONS

This page intentionally left blank.

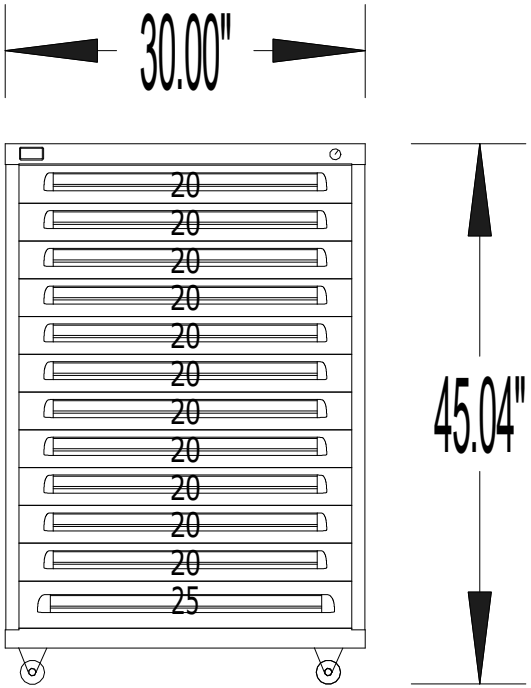


| LISTA DRAWERS | | | LISTA HOUSINGS | | | VIDMAR DRAWERS | | | VIDMAR HOUSINGS | | |
|---|---|---|---|---|---|---|---|---|---|---|---|
| Part # | Usable Height | Sidewall Height | Style | Width | Depth | Part # | Usable Height | Sidewall Height | Style | Width | Depth |
| 75F | 2 3/16 in. | 2 in. | NW | 16 1/8 in. | 28 1/2 in. | 20 | 2 3/16 in. | 2 in. | ST | 30 in | 27 3/4 in |
| 100F | 3 3/16 in. | 3 in. | MP | 22 3/16 in. | 28 1/2 in. | 25 | 3 in. | 2 in. | SV | 22 1/2 in | 27 3/4 in |
| 125F | 4 3/16 in. | 3 in. | CL | 22 3/16 in. | 22 1/2 in. | 30 | 3 7/16 in. | 3 1/16 in. | XW | 45 in | 27 3/4 in |
| 150F | 5 3/16 in. | 5 in. | SC | 28 1/4 in. | 28 1/2 in. | 35 | 4 3/16 in. | 3 7/16 in. | DW | 60 in | 27 3/4 in |
| 175F | 6 3/16 in. | 5 in. | ST | 28 1/4 in. | 22 1/2 in. | 40 | 5 3/16 in. | 4 3/16 in. | LW | 30 in | 21 3/8 in |
| 200F | 7 3/16 in. | 7 in. | EW | 34 1/4 in. | 28 1/2 in. | 45 | 6 3/16 in. | 4 3/16 in. | SL | 22 1/2 in | 21 3/8 in |
| 225F | 8 in. | 7 in. | ES | 34 1/4 in. | 22 1/2 in. | 50 | 7 in. | 6 3/16 in. | XL | 45 in | 21 3/8 in |
| 250F | 9 in. | 8 13/16 in. | HW | 40 1/4 in. | 28 1/2 in. | 55 | 7 3/16 in. | 6 3/16 in. | DL | 60 in | 21 3/8 in |
| 275F | 10 13/16 in. | 8 13/16 in. | HS | 40 1/4 in. | 22 1/2 in. | 60 | 8 11/2 in. | 6 3/16 in. | TB | 16 1/2 in | 28 3/8 in |
| 300F | 11 in. | 10 13/16 in. | MW | 47 in. | 28 1/2 in. | 65 | 9 11/8 in. | 6 3/16 in. | UB | 30 in | 27 3/4 in |
| 350F | 13 in. | 10 13/16 in. | DW | 56 1/2 in. | 28 1/2 in. | 70 | 10 11/16 in. | 6 3/16 in. | | | |

Installation. Unless otherwise specified, Seller assumes no obligation to install any products sold or to place any products in working order at Buyer's premises.In the event that Seller's products are installed by Seller or its designated third-party installer,such installer shall be responsible for any direct damages incurred by Buyer in the event of improper installation or the installer's negligence. Seller or its designated third-party installer shall not, however, have any liability hereunder for any incidental, indirect or consequential damages arising out of the installation of the products. If Buyer designates the installer, Seller shall have no liability arising out of or in connection with the installation of the products, and Buyer hereby waives any such claims against Seller.

*** Conceptual images only - actual product details may vary. *** THIS DRAWING IS THE PROPERTY OF STANLEY BLACK & DECKER INC.

StanleyBlack&Decker Storage Solutions

LISTA Vidmar

# Kingston Health Sciences

Location QUOTE# Q-197177

| | |
|---|---|
| Drawn by: Butch Karnes | **DATE:** November 26,2022 |
| | SCALE: Not to Scale |
| Cabinet | DWG. NO.: |

THIS DRAWING IS THE PROPERTY OF STANLEY BLACK & DECKER INC.,

THIS PRINT AN/OR ACCOMPANYING PROPOSAL IS ISSUES ONLY TO THE COMPANY WHOSE NAME APPEARS THEREON, AND IS TO BE RETAINED IN STRICT CONFIDENCE NOETH TO BE DUPLICATED NOT EXHIBITED EXCEPT IN CONNECTION WITH THE USE OF STANLEY BLACK & DECKER STORAGE EQUIPMENT
© Black & Decker US, Inc Business

This page intentionally left blank.